# BODY BUILDER MANUAL

FOR

# 2015 CHEVROLET SILVERADO/GMC SIERRA

# ELECTRICAL SECTION

Note to User:
As part of our mission to provide an up-to-date website that includes detailed Body Builder Manuals, Technical Bulletins, and Best Practice Manuals, we are now using sectional excerpts directly from the General Motors Service Information publications for our Electrical Body Builder Manuals.

You will note that the section numbers are non-sequential as we have provided only those that are believed to be the most pertinent to the Upfitter community and best suited to their needs.*

This new usage of the Service Information provides the opportunity for us to remain consistent with the changes that take place throughout the model year and to provide you updated information in a more timely fashion.

**** If you would like to have access to all of the electrical Service Information, please apply for a subscription from ACDelco at [http://acdelcotechconnect.com/html/tss_tech_esi.jsp](http://acdelcotechconnect.com/html/tss_tech_esi.jsp)***

# Body Systems

## Adjustable Pedals

### Schematic and Routing Diagrams

#### Adjustable Pedal Schematics

##### Adjustable Pedals (without A45)

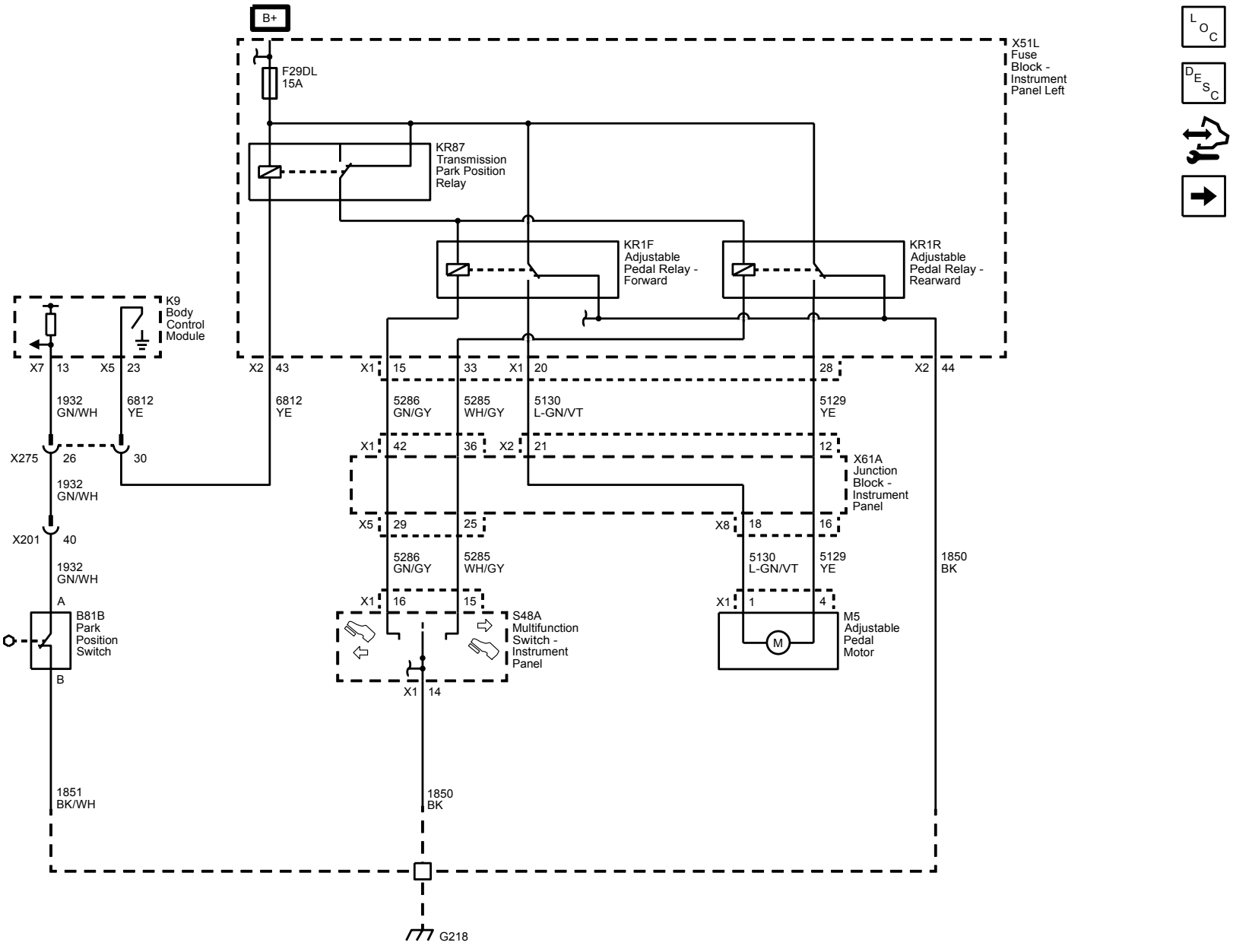

# Adjustable Pedals (A45)

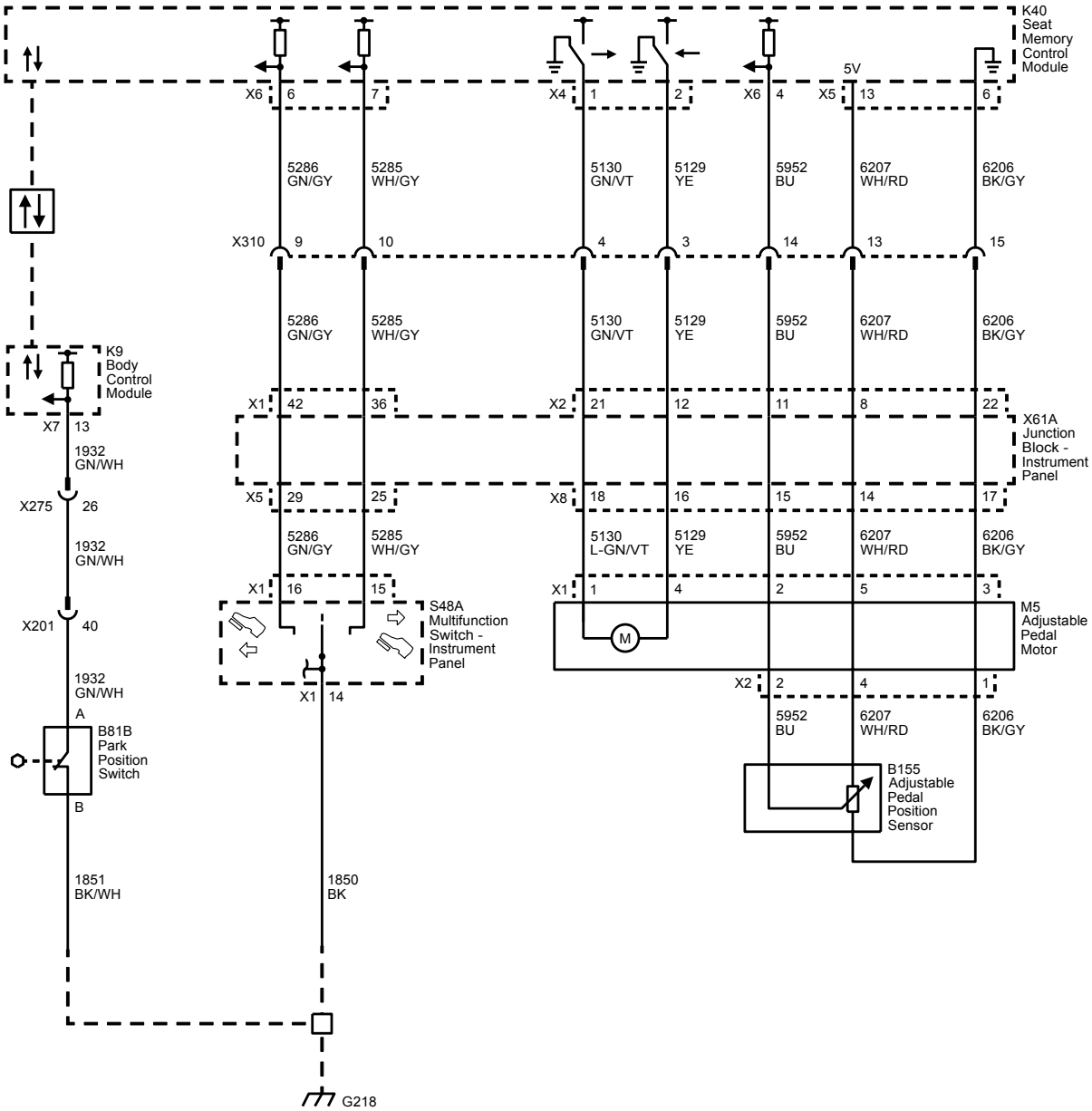

# Fixed and Moveable Windows

## Schematic and Routing Diagrams

### Moveable Window Schematics

#### Driver Door (A31)

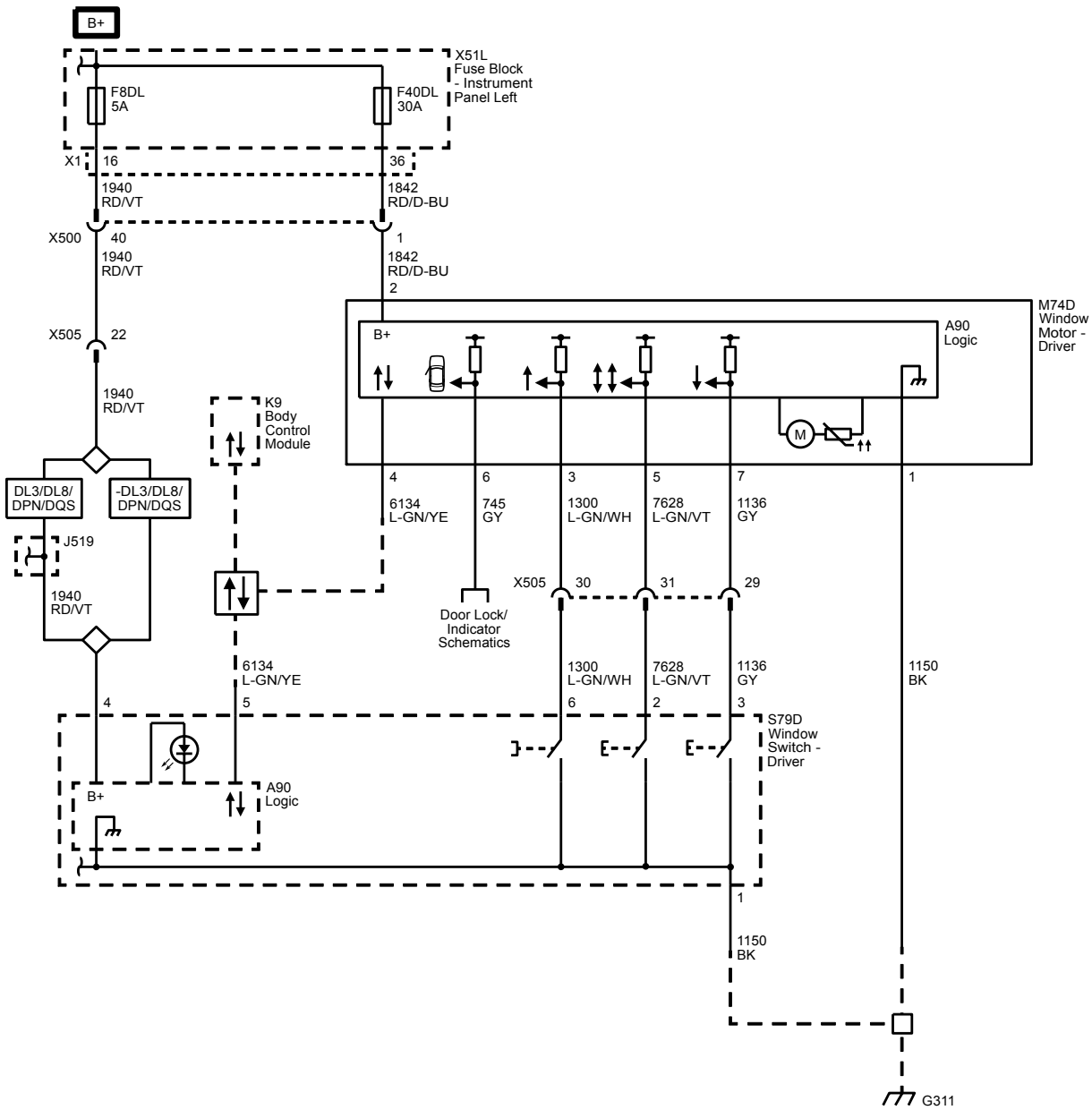

# Passenger Door (A31)

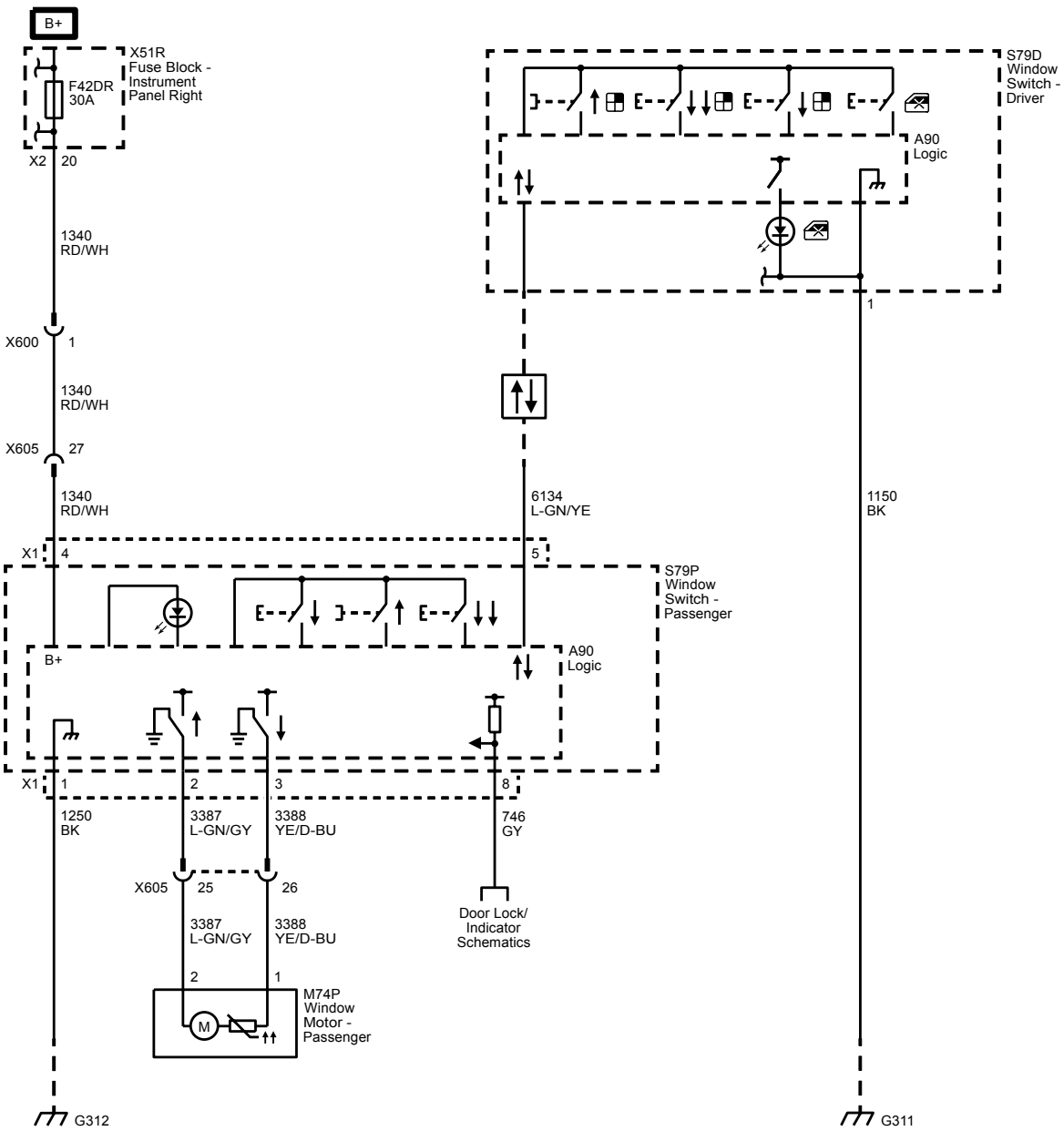

## Rear Doors (Extended or Crew Cab)

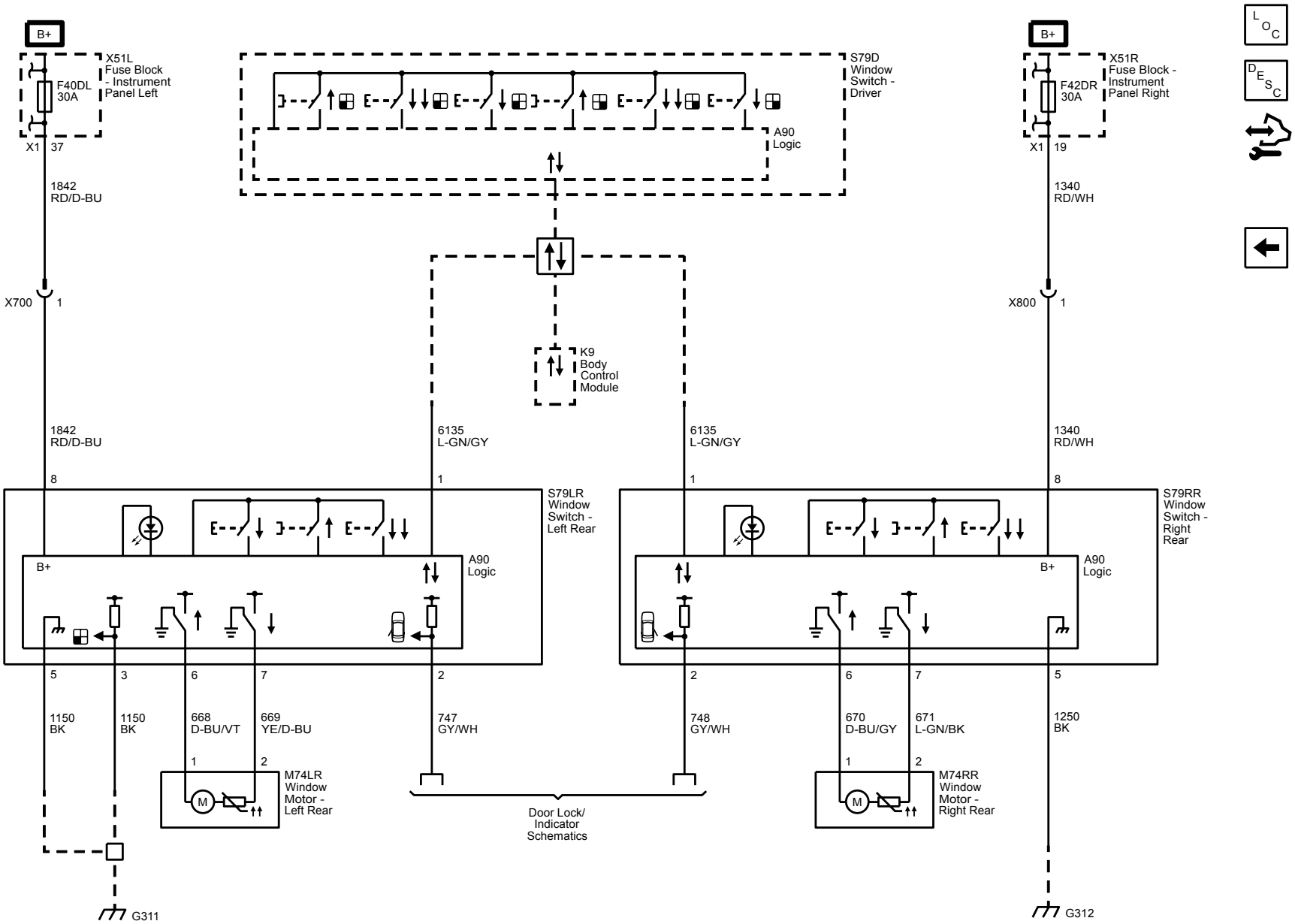

# Rear Sliding Window (A48)

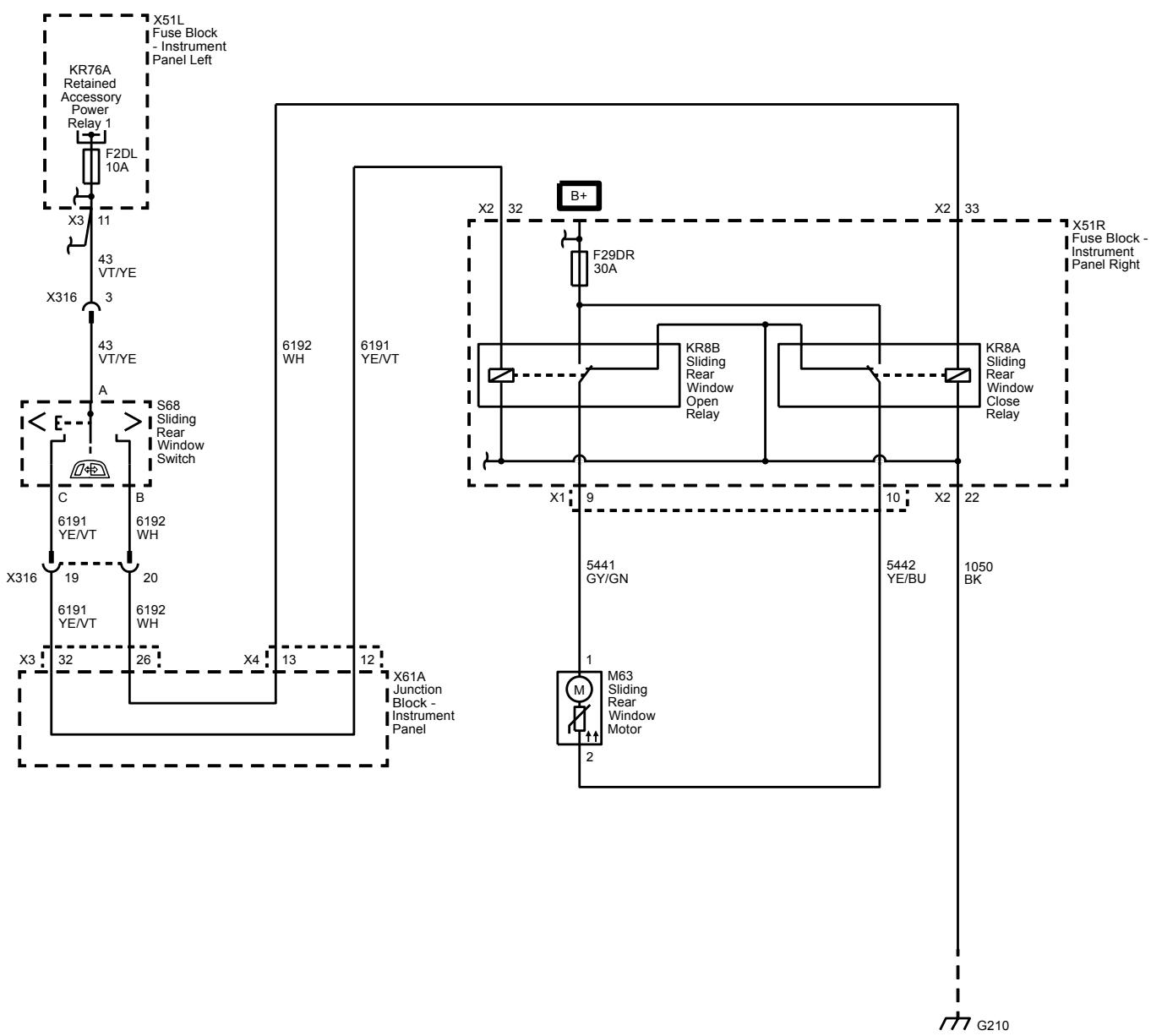

# Defogger Schematics

## Defogger

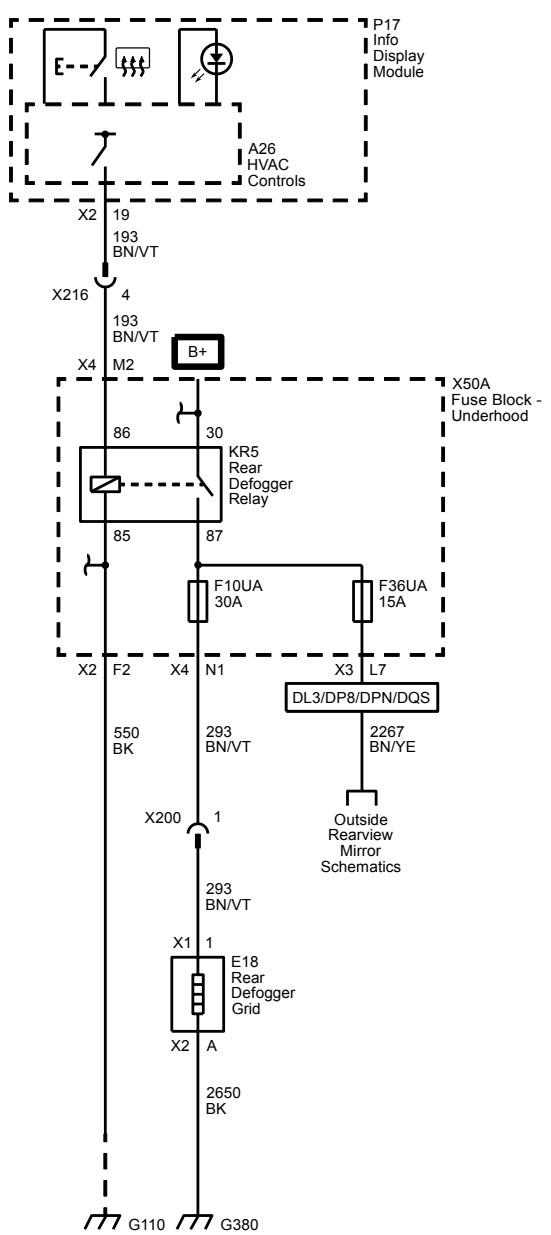

# Description and Operation

## Power Windows Description and Operation

### Power Windows System Components

The power window system consists of the following components:

- Driver window switch
- Passenger window switch
- Left rear window switch (Extended Cab and Crew Cab)
- Right rear window switch (Extended Cab and Crew Cab)
- Window motors in each of the doors
- Sliding rear window switch
- Sliding rear window relays
- Sliding rear window motor
- 30A Fuse
- Body control module (BCM)

### 14 Power Windows AXG-AER-AEQ Block Diagram

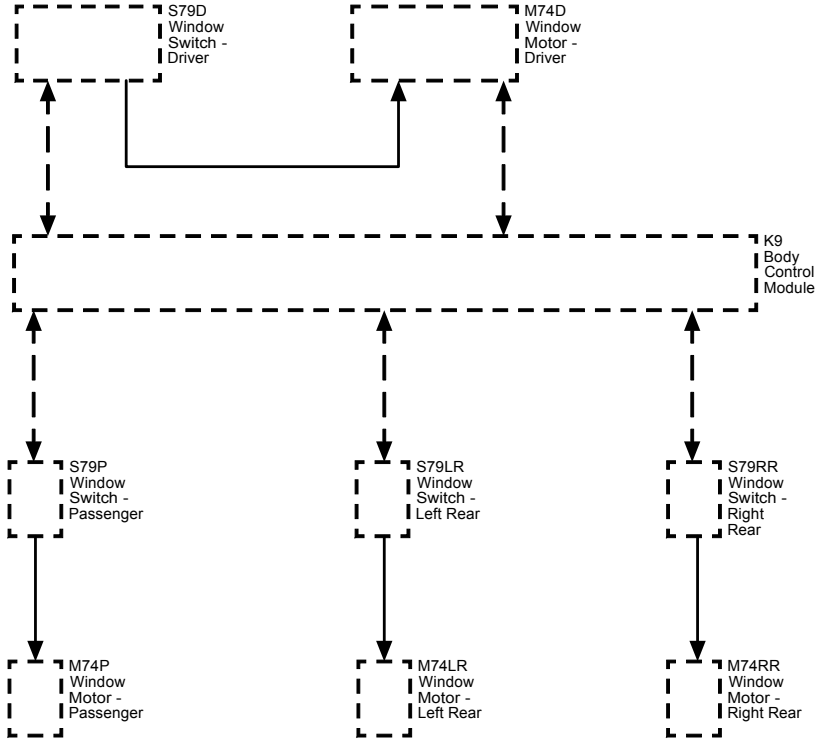


### Driver Express Up and Express Down Power Window

The driver door contains a window motor is smart motor that will detect excessive resistance while performing the express up function and automatically reverse direction to prevent injury to any occupants that may become trapped between the closing window and the door frame. The automatic reverse safety feature can be overridden by pulling and holding the window switch.

The logic circuit within the window motor monitors the up, down and express signal circuits which are normally equal to B+ voltage. When a switch is used on the window switch, the contacts close causing a voltage drop within the appropriate signal circuit. The window motor will detect the voltage drop and will command the window to move in the direction requested.

The driver window switch communicates to the BCM by a serial data circuit. When the driver wishes to control the passenger window, the driver will use the appropriate switch on the driver window switch. When this switch is used, a serial data message is sent to the BCM requesting the passenger window motor command, the BCM will then send a serial data message to the passenger window motor which will then move in the direction requested

### Passenger, Left Rear and Right Rear Express Down Power Windows

For the passenger, right rear and left rear doors, when their window switch is pressed in the down position, battery positive voltage is applied to their respective window motor control circuit and ground to the other window motor control circuit causing that window to open. When the individual window switch is pulled in the up position, voltage and ground is applied to the window motor in the opposite direction causing that window to close. The return path to ground is supplied through the inactive control circuit being normally grounded through the window switch.

Each passenger and rear window switch communicates to the BCM by a serial data circuit. When the driver wishes to control the passenger, left rear or right rear window, the driver will use the appropriate switch on the driver window switch. When this switch is used, a serial data message is sent to the BCM requesting a window motor command, the BCM will then send a serial data message to the appropriate door window switch which will then command that window to move in the direction requested.

### Rear Window and Rear Door Lockout Operation (Extended Cab and Crew Cab)

The driver power window switch contains a window lockout switch, when the driver presses the window lockout switch, a serial data message is sent to the BCM which will send a disable command to the rear window motors, the rear window motors will then ignore all voltage drops in the window motor control circuits caused by using the rear window switches. The rear windows will still function normally from the switches on the driver window switch.

### Power Sliding Rear Window

NOTE: Power window lockout switch disables left rear and right rear passenger window switches only and has no effect on the operation of the power sliding window switch.

The power sliding rear window motor is controlled from the rear window OPEN/CLOSE switch through OPEN and CLOSE relays. The OPEN/CLOSE switch is supplied voltage from the body control module accessory voltage output circuit. When the switch is pressed in the OPEN or CLOSED position the OPEN or CLOSED relay coil will be supplied accessory voltage and energized through the appropriate relay control circuit. While the OPEN and CLOSE relays are in a de-energized state both motor control circuits will be closed to ground. When one of the relays is energized its motor control circuit will be closed to the battery voltage supply circuit and the other motor control circuit will remain grounded through the de-energized relay.

# Rear Window Defogger Description and Operation

## Rear Window Defogger System Components

The rear window defogger system consists of the following components:

- HVAC control module
- Rear defogger relay
- Rear defogger grid
- 40A fuse

## Rear Window Defogger Block Diagram

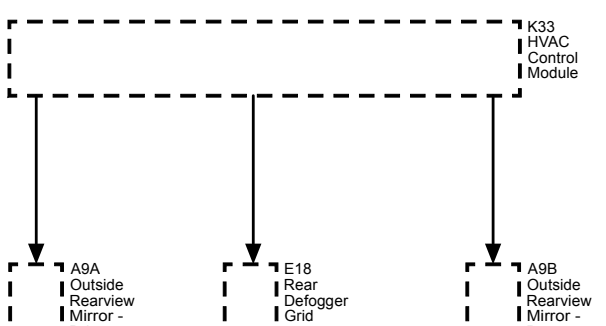


## Rear Window Defogger Operation

The rear defog control system utilizes a single zone backlight design, driven with a single relay configuration. Additionally, up to two outside rear view mirrors can be heated if equipped. A switch for the customer to control the system is provided within the HVAC control module, also included in the HVAC control module is an indicator to inform the customer with the current state of the system. The system is only operational when engine is running or during remote start.

Pressing the heated rear window switch on the HVAC control module causes the HVAC control module to provide voltage to the coil side of the rear defogger relay, this will energize the relay causing the relay switch contacts to close allowing B+ voltage to flow through the rear defogger grid control circuit to the rear defogger grid.

When the rear heated window switch is pressed and the engine is running, the rear defog control system will remain active for 10 minutes. After the initial cycle has lapsed, pressing the switch again will continue rear window defogger operation, but the cycle will only last 5 minutes.

# Horns

## Schematic and Routing Diagrams

### Horn Schematics

#### Horn

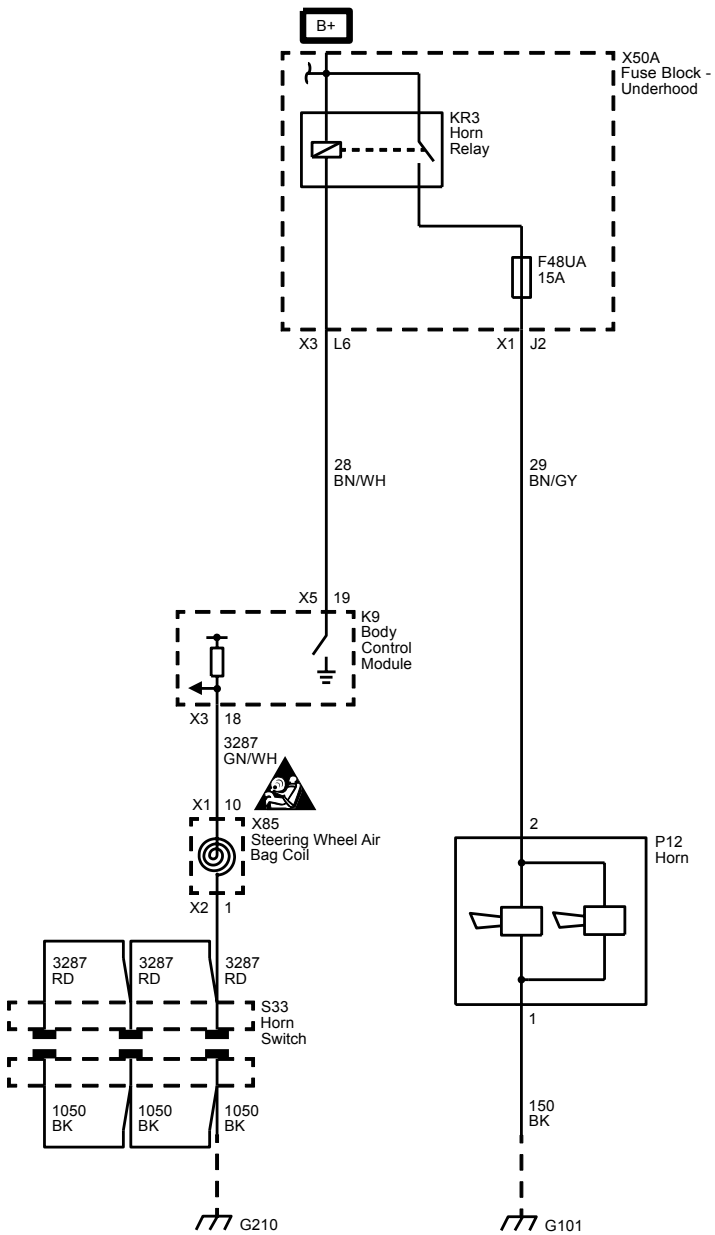

# Description and Operation

## Horns System Description and Operation

### System Description

The horn system consists of the following components:

- HORN fuse
- Horn relay
- Horn switch
- Horn assembly
- Body control module (BCM)

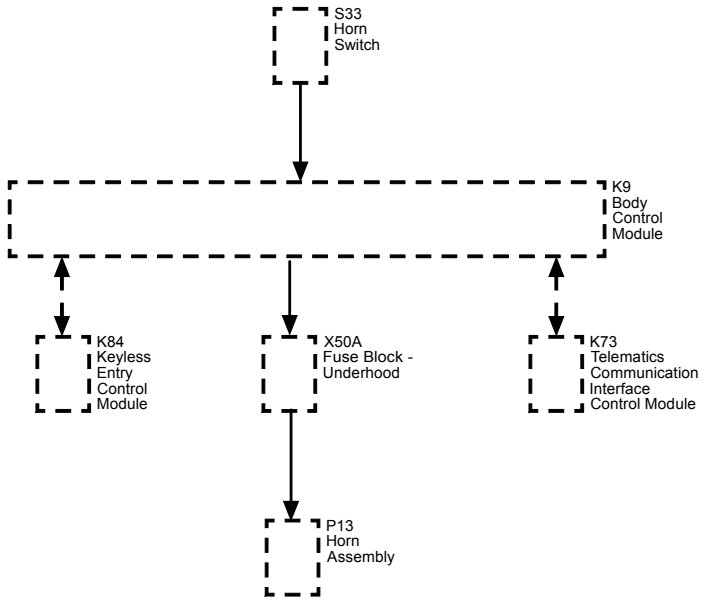


### System Operation

The vehicle horn system is activated under the following conditions:

- When the horn switch is depressed
- The BCM commands the horns ON under any of the following conditions:
  - When the content theft deterrent system detects a vehicle intrusion—For further information refer to CELL Link Error - Link target cell (cell ID 149050) is invalid for this publication..
  - When the panic button is depressed on the remote control door lock transmitter—For further information refer to CELL Link Error - Link target cell (cell ID 52297) is invalid for this publication..
  - When the keyless entry system is used to lock the vehicle, a horn chirp may sound to notify the driver that the vehicle has been locked. The notification feature may be enabled or disabled through personalization. For further information refer to CELL Link Error - Link target cell (cell ID 52297) is invalid for this publication..
  - When the OnStar® system is used to sound the horns if equipped—For further information, refer to CELL Link Error - Link target cell (cell ID 149754) is invalid for this publication..

### Circuit Operation

Battery positive voltage is applied at all times to the horn relay coil and the horn relay switch. Pressing either of the horn switches applies ground to the horn relay control circuit. The BCM may also apply ground to the horn relay control circuit as described above. When the horn relay control circuit is grounded, the horn relay is energized and battery positive voltage is applied to the horns through the horn control circuit. The horns sound as long as ground is applied to the horn relay control circuit.

# Lighting

## Schematic and Routing Diagrams

### Headlights/Daytime Running Lights (DRL) Schematics

#### Controls

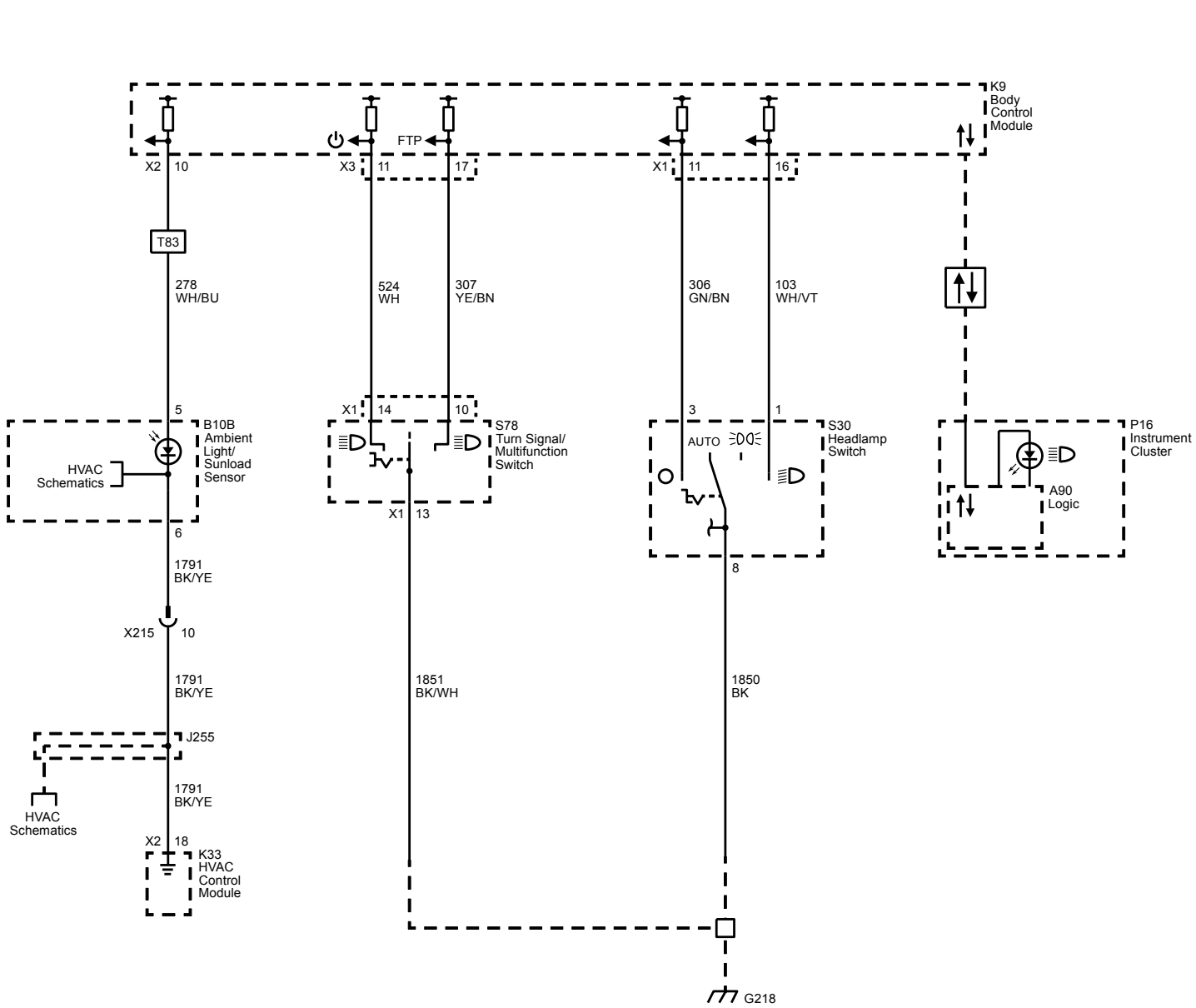

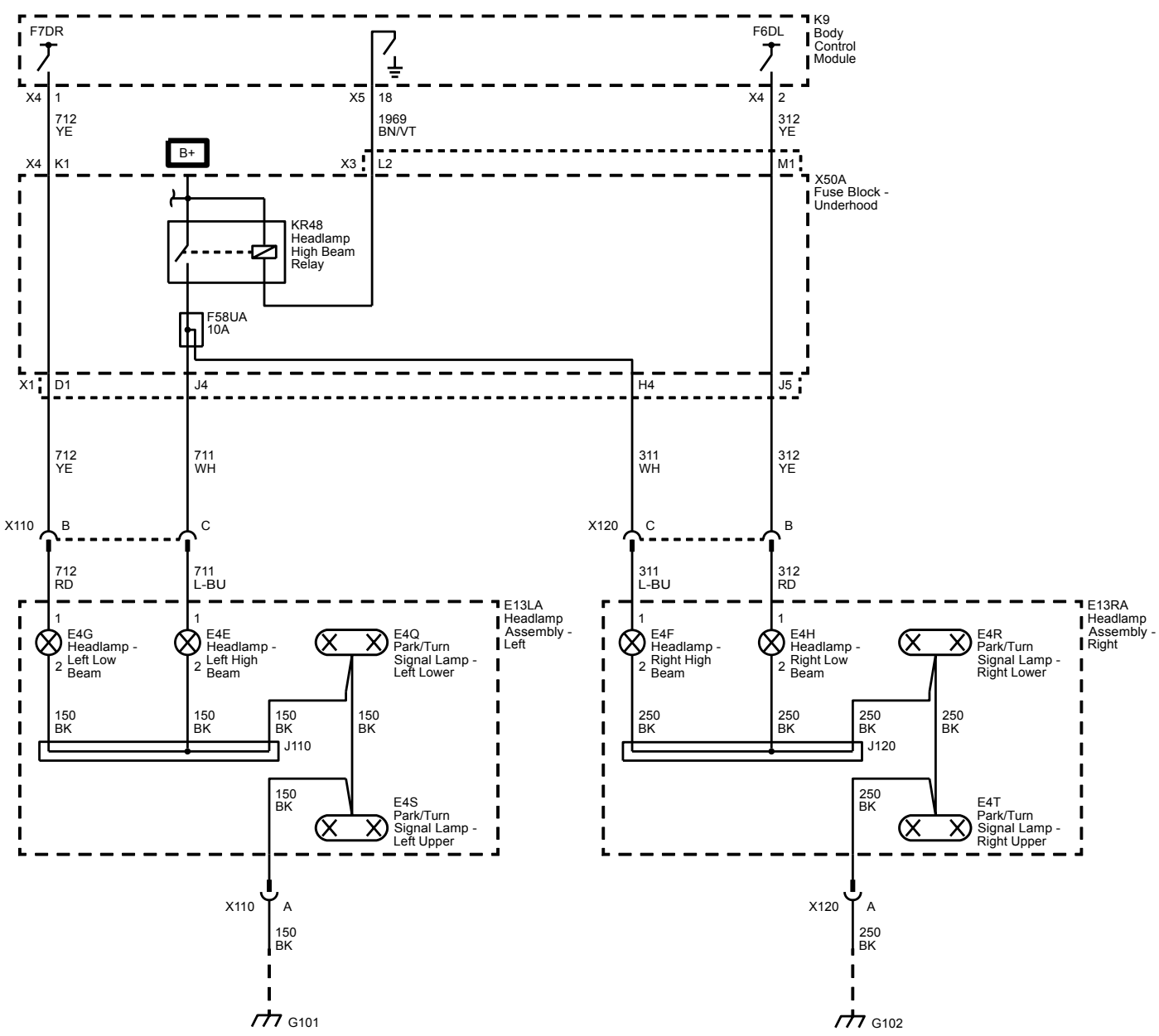
F7DR
F6DL
K9
Body
Control
Module
X4 1
712
YE
X5 18
1969
BN/VT
X4 2
312
YE
B+
X4 K1
X3 L2
M1
X50A
Fuse Block -
Underhood
KR48
Headlamp
High Beam
Relay
F58UA
10A
X1 D1
J4
H4
J5
712
YE
711
WH
311
WH
312
YE
X110 B
C
X120 C
B
712
RD
711
L-BU
311
L-BU
312
RD
E13LA
Headlamp
Assembly -
Left
E4G
Headlamp -
Left Low
Beam
E4E
Headlamp -
Left High
Beam
E4Q
Park/Turn
Signal Lamp -
Left Lower
150
BK
J110
E4S
Park/Turn
Signal Lamp -
Left Upper
X110 A
G101
E13RA
Headlamp
Assembly -
Right
E4F
Headlamp -
Right High
Beam
E4H
Headlamp -
Right Low
Beam
E4R
Park/Turn
Signal Lamp -
Right Lower
250
BK
J120
E4T
Park/Turn
Signal Lamp -
Right Upper
X120 A
G102

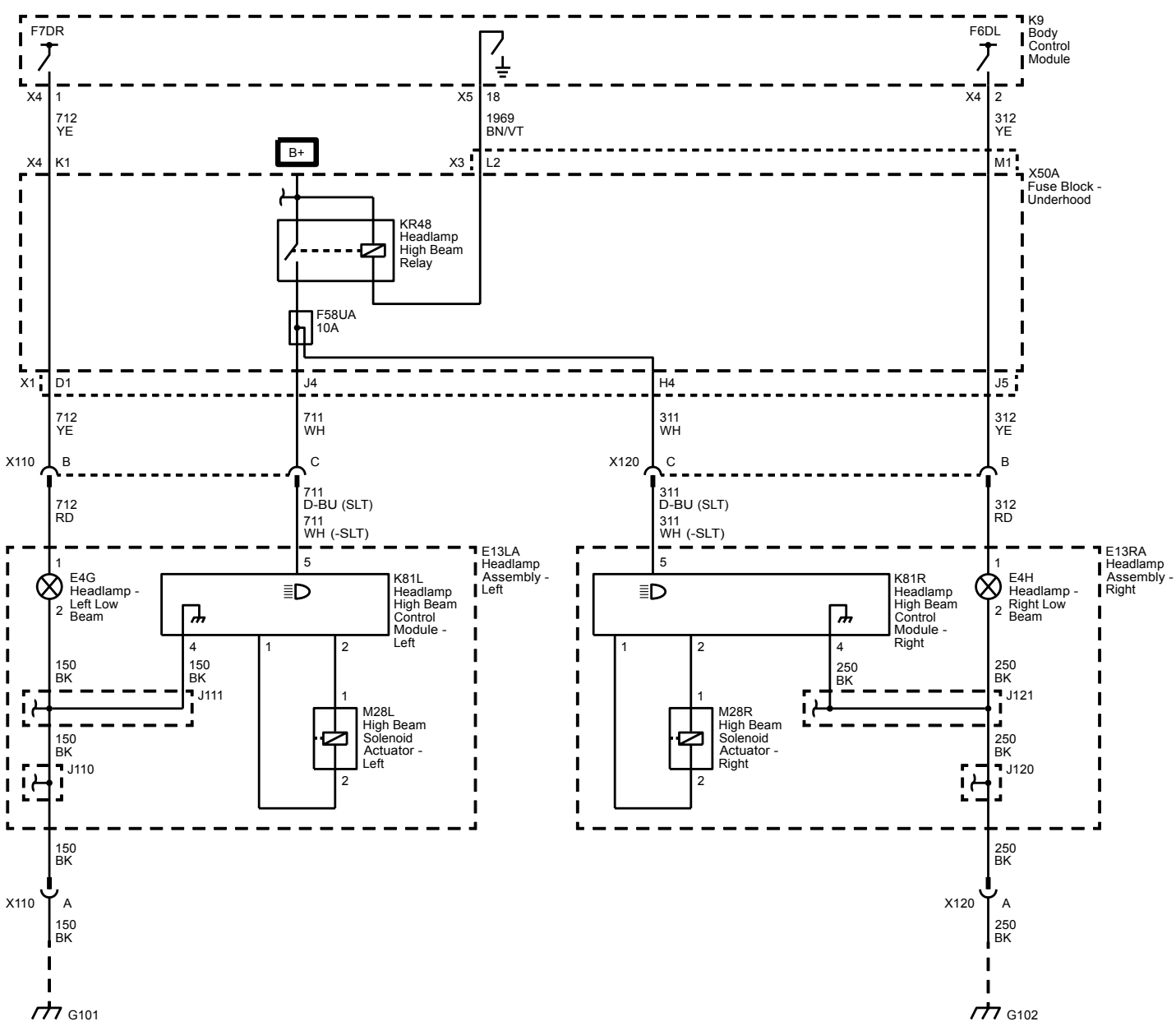
F7DR
X4 1
712
YE
X5 18
1969
BN/VT
F6DL
X4 2
312
YE
K9
Body
Control
Module
X4 K1
X3 L2
M1
X50A
Fuse Block -
Underhood
B+
KR48
Headlamp
High Beam
Relay
F58UA
10A
X1 D1
J4
H4
J5
712
YE
711
WH
311
WH
312
YE
X110 B
C
X120 C
B
712
RD
711
D-BU (SLT)
711
WH (-SLT)
311
D-BU (SLT)
311
WH (-SLT)
312
RD
E13LA
Headlamp
Assembly -
Left
E4G
Headlamp -
Left Low
Beam
K81L
Headlamp
High Beam
Control
Module -
Left
150
BK
J111
J110
M28L
High Beam
Solenoid
Actuator -
Left
E13RA
Headlamp
Assembly -
Right
K81R
Headlamp
High Beam
Control
Module -
Right
E4H
Headlamp -
Right Low
Beam
250
BK
J121
J120
M28R
High Beam
Solenoid
Actuator -
Right
X110 A
X120 A
G101
G102

# Daytime Running Lamps (GMC/Z88 with SLT)

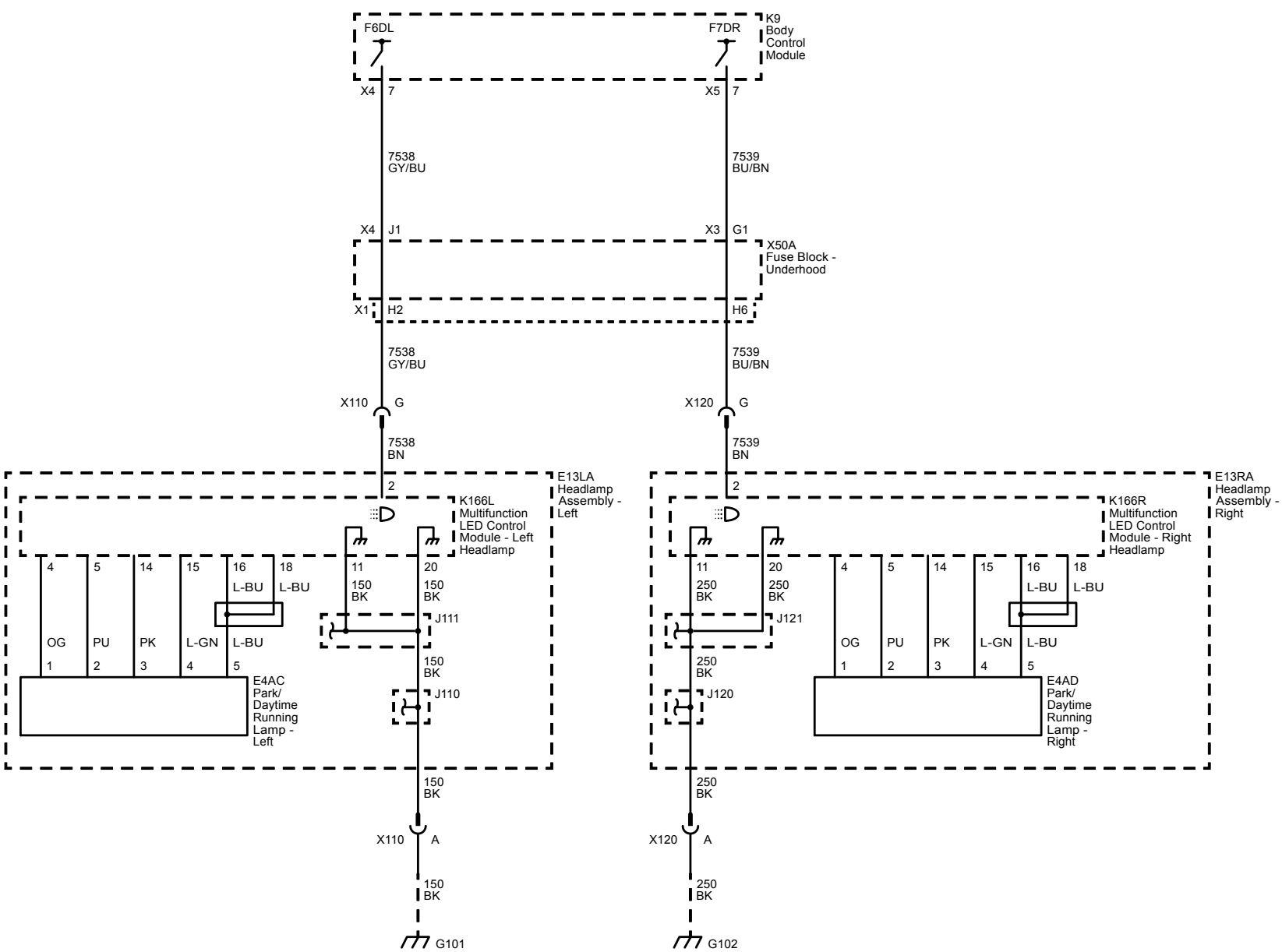

## Fog Lamps (T3U)

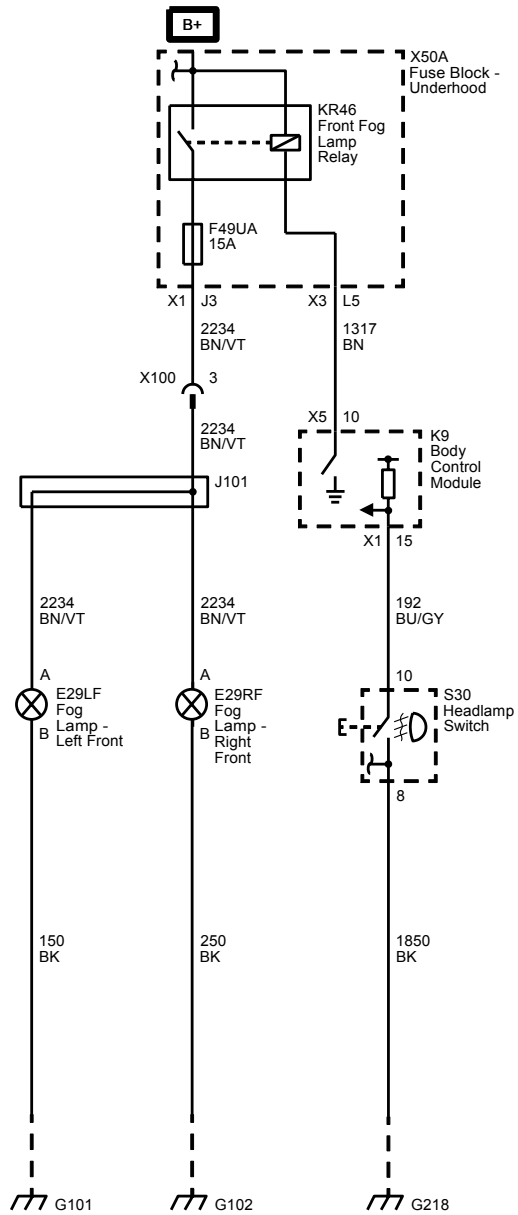

## Controls

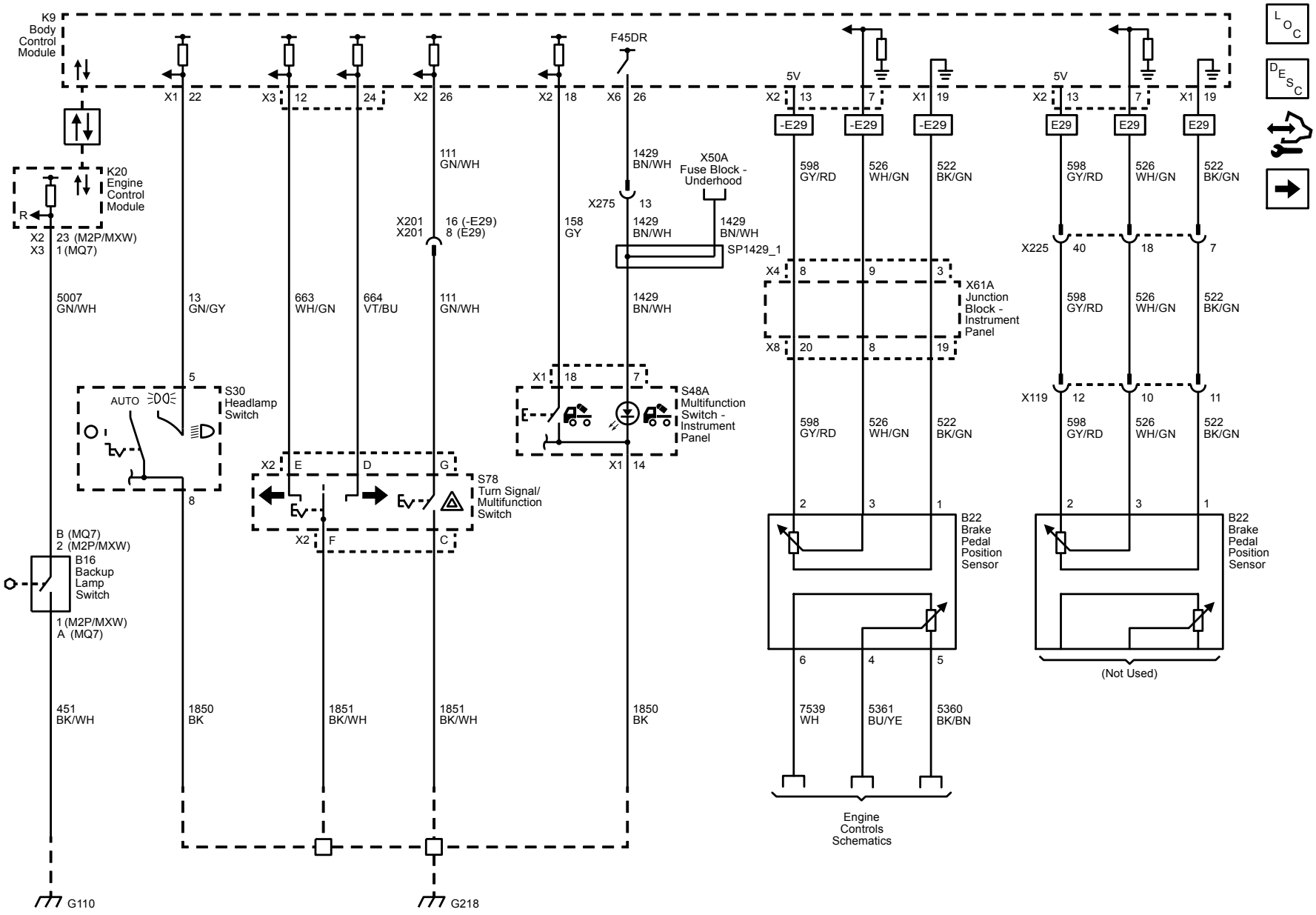
K9
Body
Control
Module
X1 22
X3 12 24
X2 26
X2 18
X6 26
F45DR
5V
X2 13 7
X1 19
-E29
E29
K20
Engine
Control
Module
R
X2
X3
23 (M2P/MXW)
1 (MQ7)
5007
GN/WH
13
GN/GY
663
WH/GN
664
VT/BU
111
GN/WH
X201
X201
16 (-E29)
8 (E29)
158
GY
1429
BN/WH
X50A
Fuse Block -
Underhood
X275 13
SP1429_1
598
GY/RD
526
WH/GN
522
BK/GN
X4 8 9 3
X61A
Junction
Block -
Instrument
Panel
X8 20 8 19
X225 40 18 7
X119 12 10 11
5
AUTO
S30
Headlamp
Switch
8
X1 18 7
S48A
Multifunction
Switch -
Instrument
Panel
X1 14
X2 E D G
X2 F C
S78
Turn Signal/
Multifunction
Switch
2 3 1
B22
Brake
Pedal
Position
Sensor
6 4 5
7539
WH
5361
BU/YE
5360
BK/BN
(Not Used)
B (MQ7)
2 (M2P/MXW)
B16
Backup
Lamp
Switch
1 (M2P/MXW)
A (MQ7)
451
BK/WH
1850
BK
1851
BK/WH
1851
BK/WH
1850
BK
G110
G218
Engine
Controls
Schematics

# Park Lamps (Chevrolet/X88)

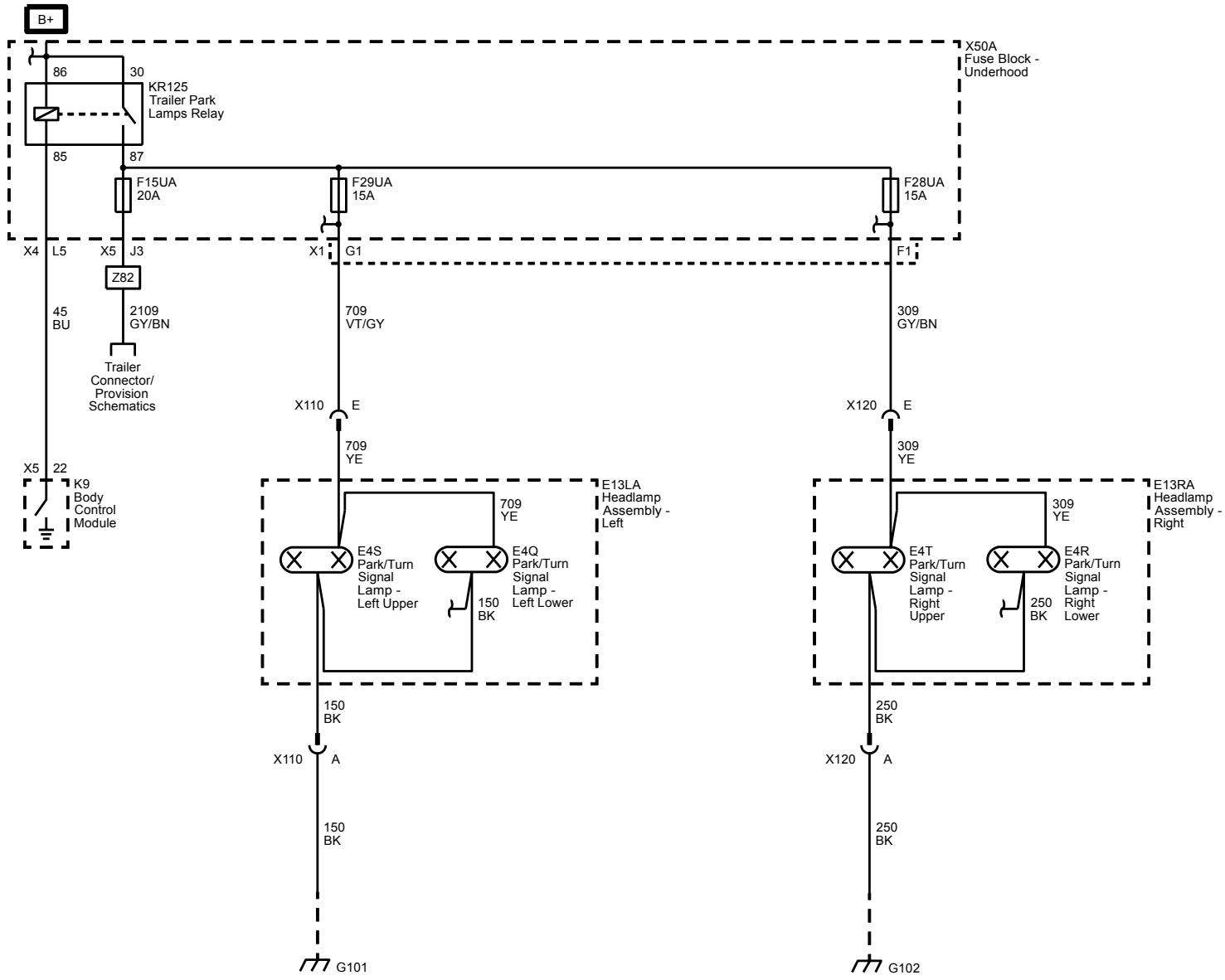

# Park Lamps - Left (GMC/Z88)

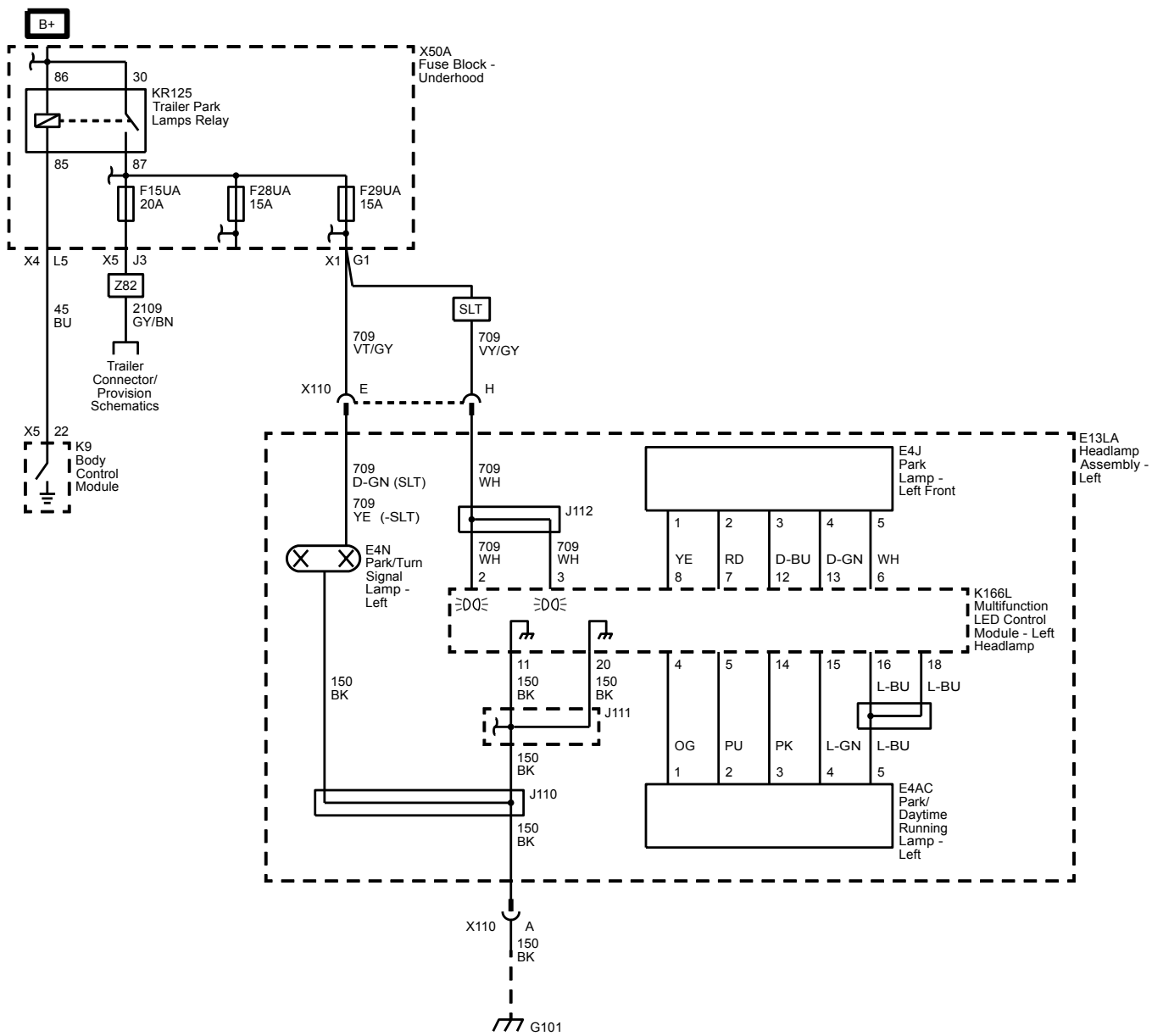

# Park Lamps - Right (GMC/Z88)

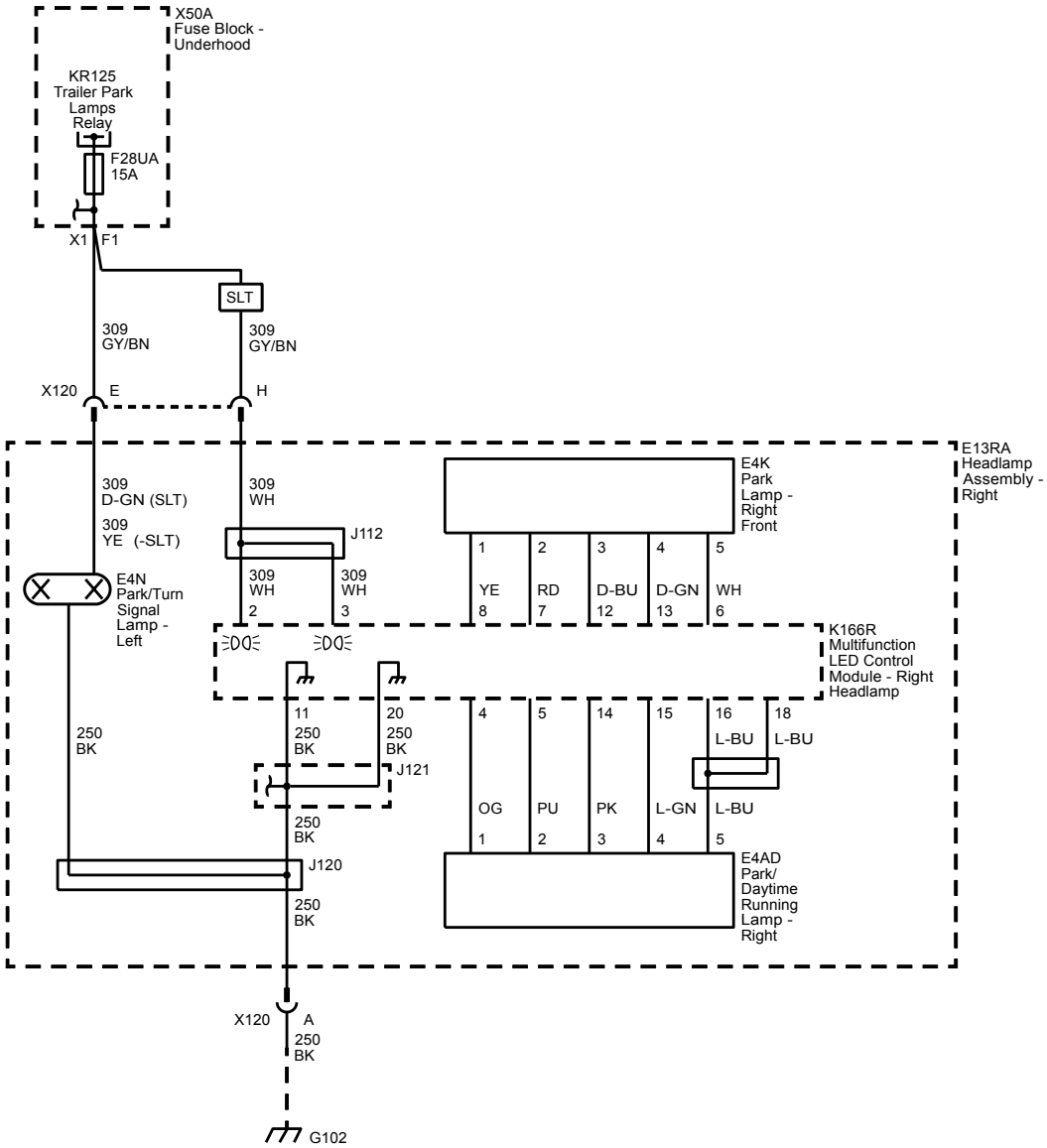

# Park Lamps - Mirror (DPN or DQS) and Roof (U01)

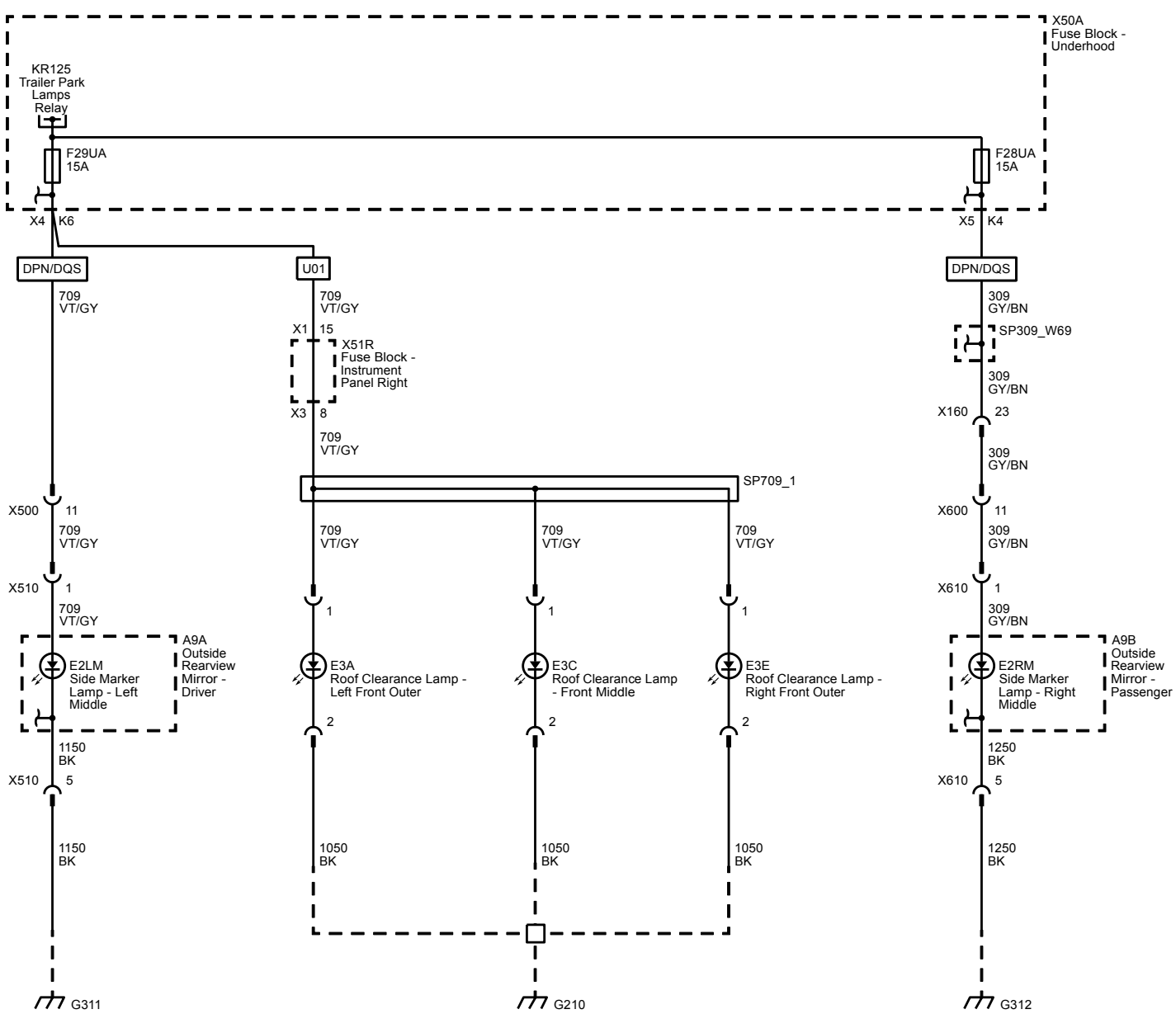

# Park Lamps - Rear Clearance (DRW)

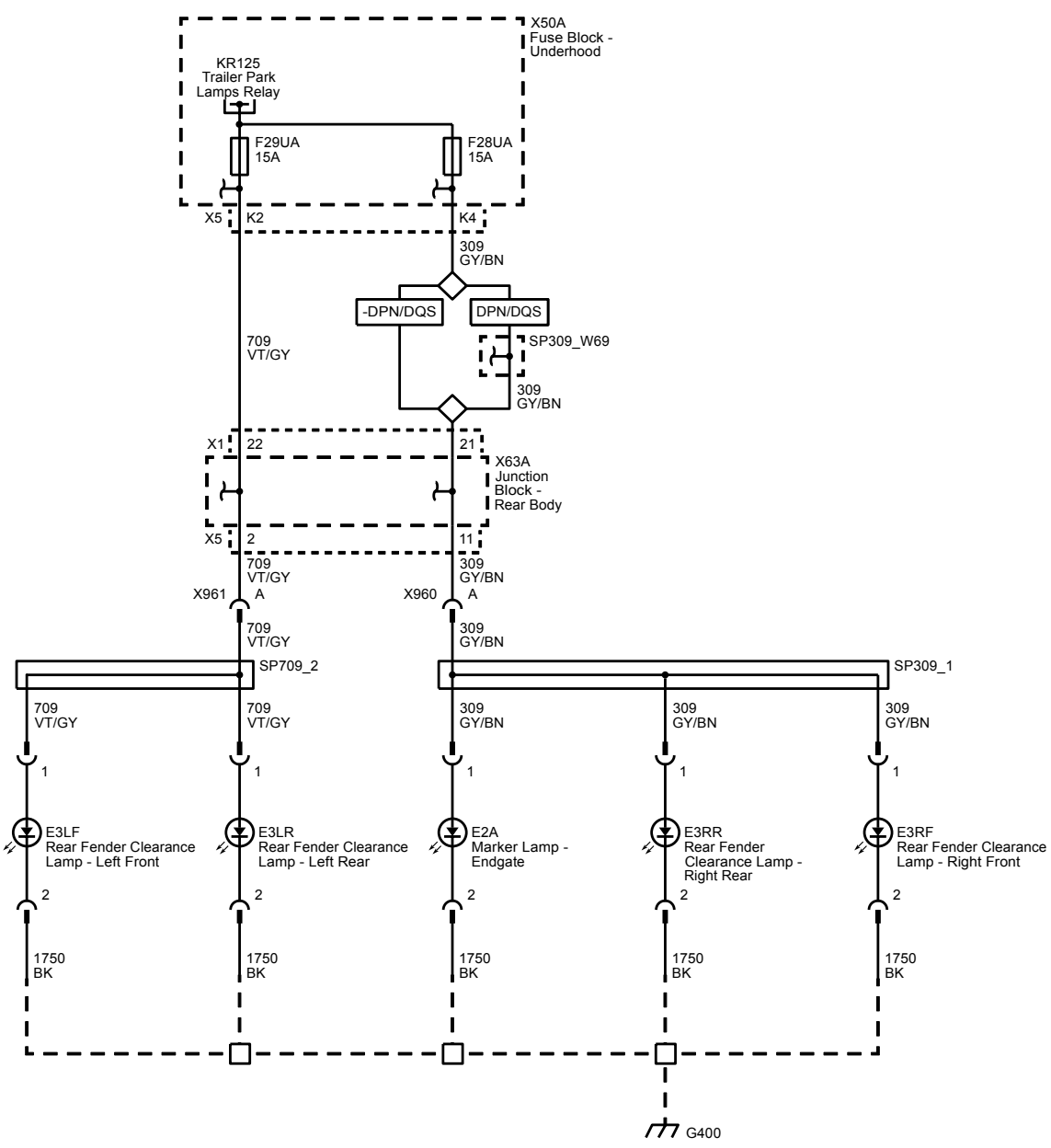

# Turn Signal Lamps - Front (Chevrolet/X88)

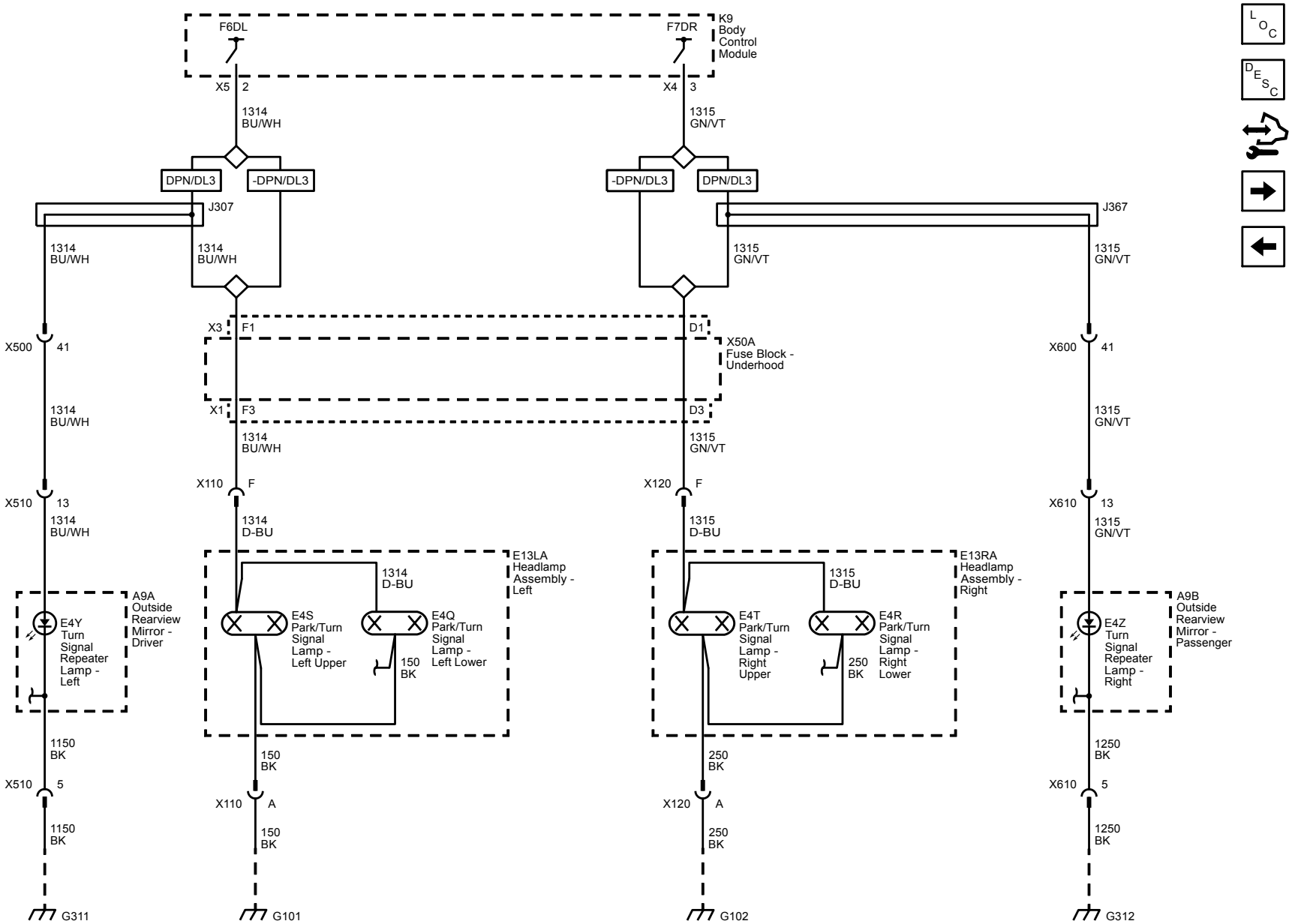

# Turn Signal Lamps - Front (GMC/Z88)

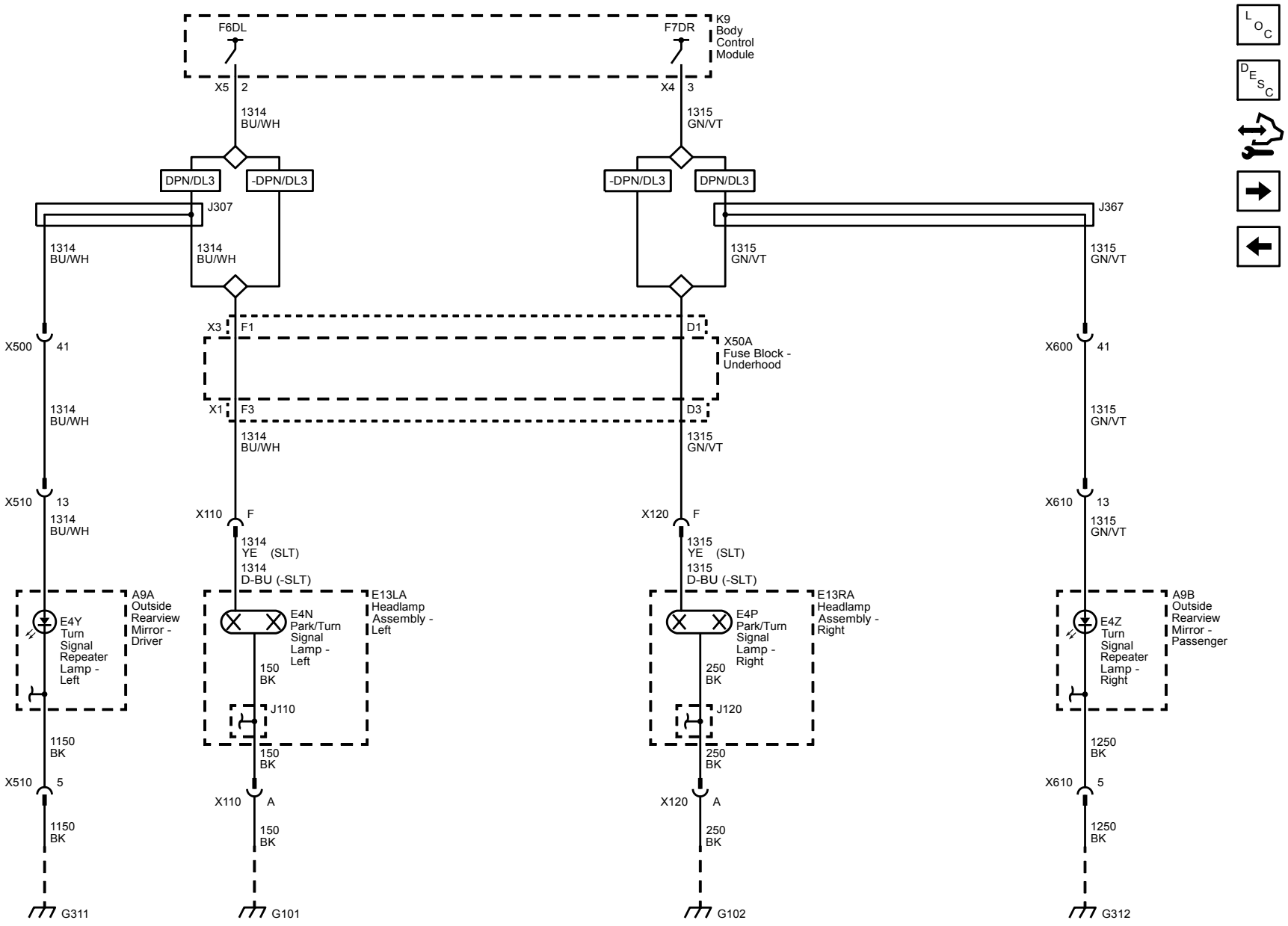

## Tail Lamps (without ZW9)

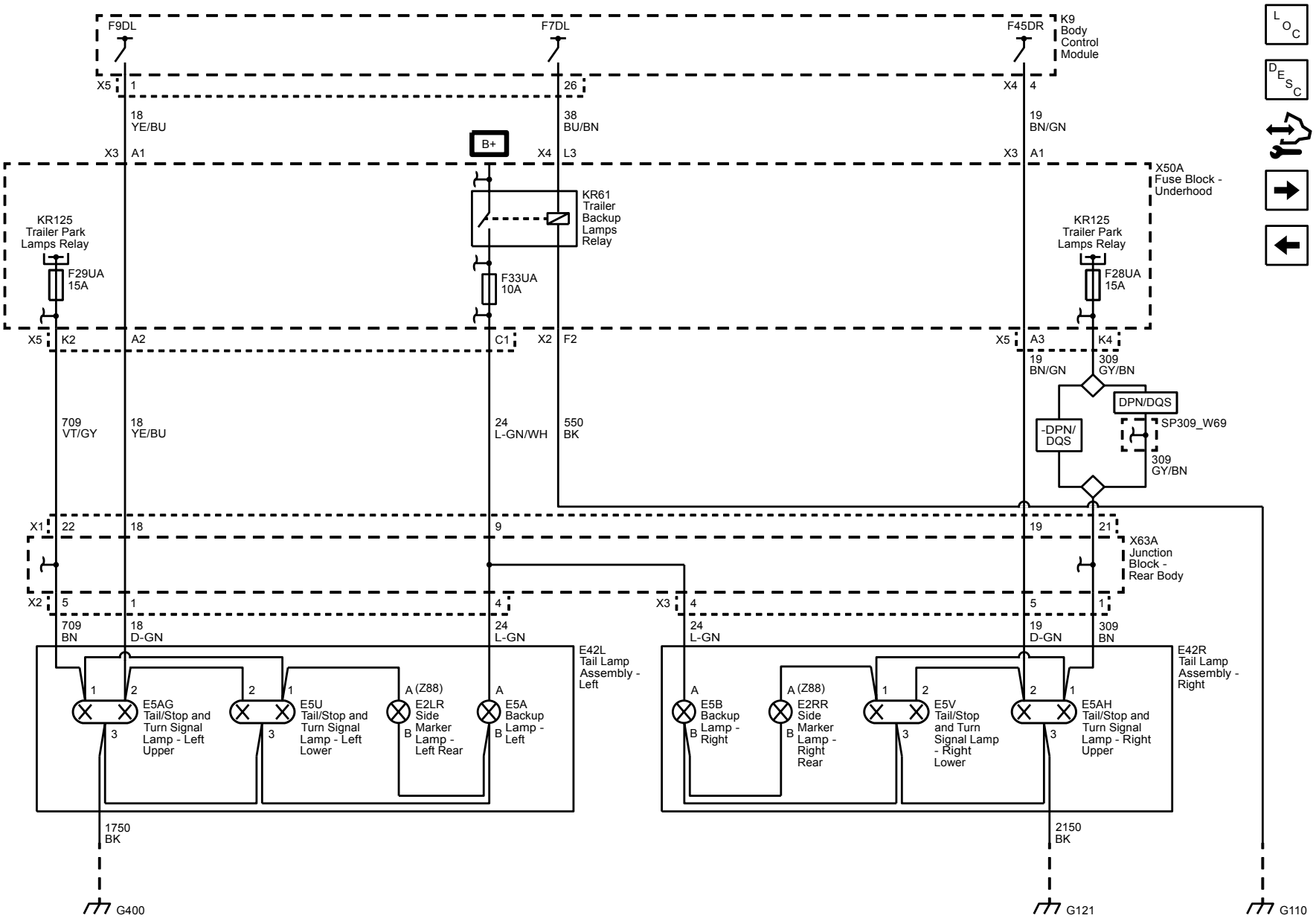

# Tail Lamps (ZW9)

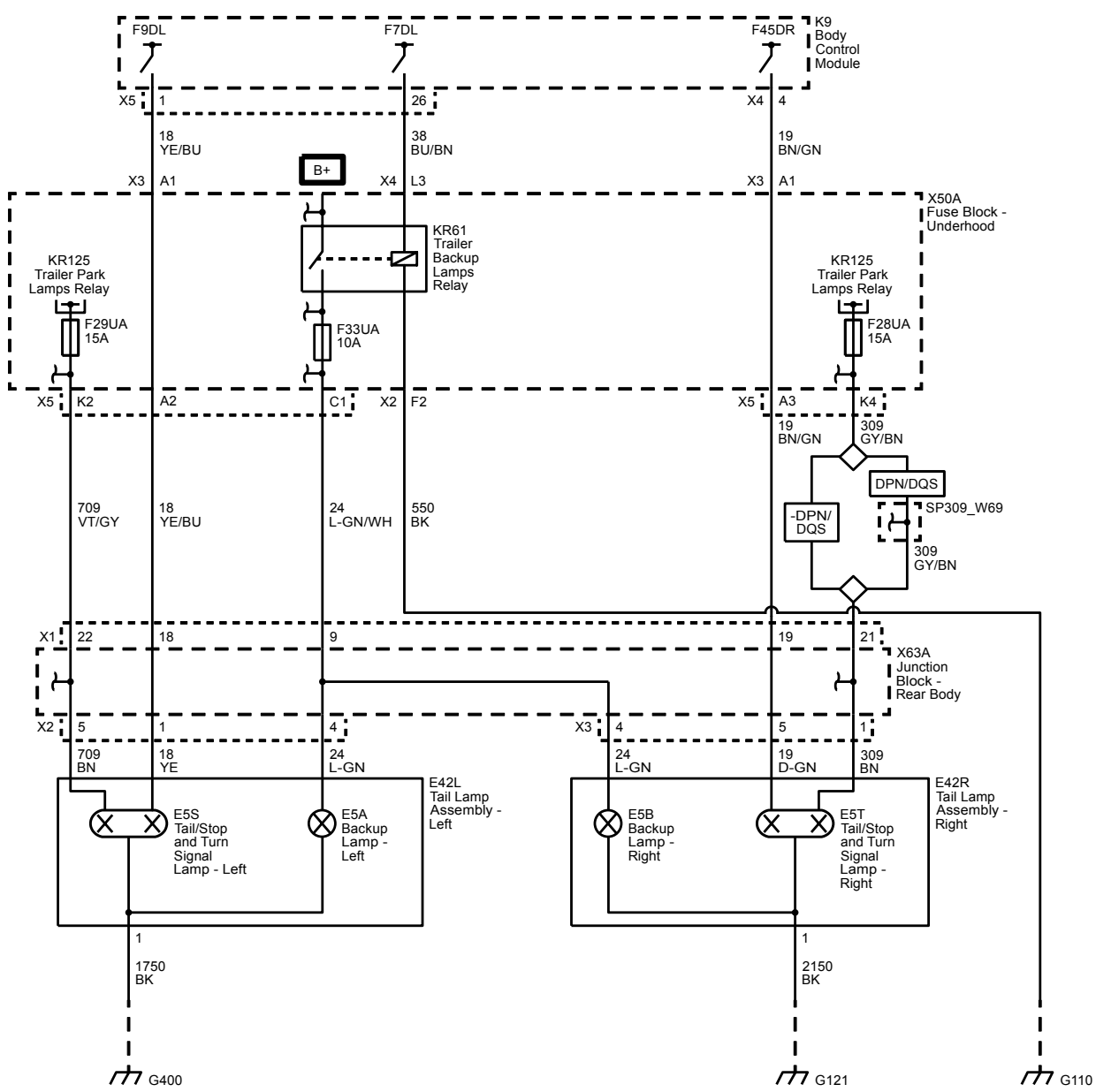

# Roof Cargo and Center High Mounted Stop Lamps (except E29)

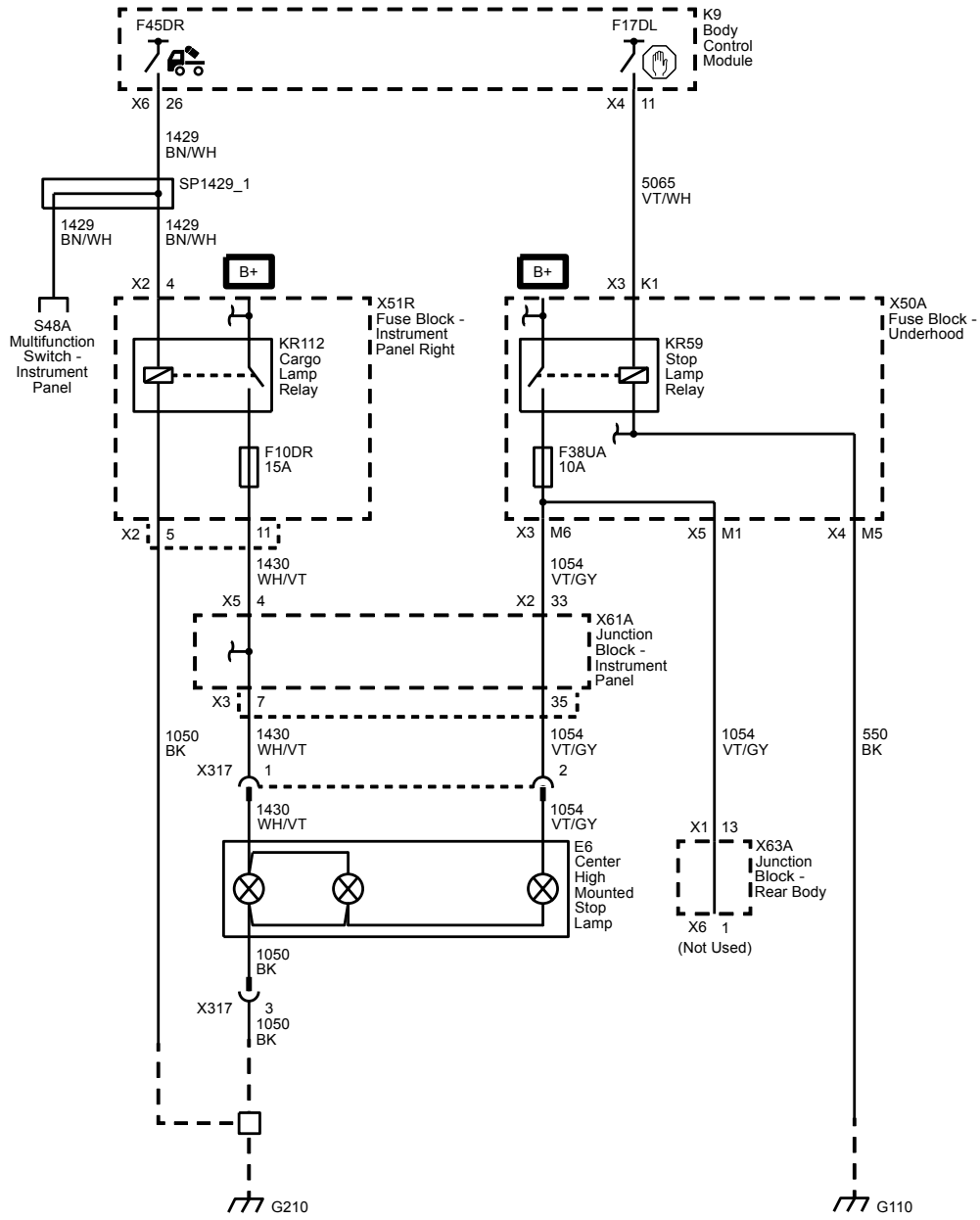

# Roof Cargo and Center High Mounted Stop Lamps (E29)

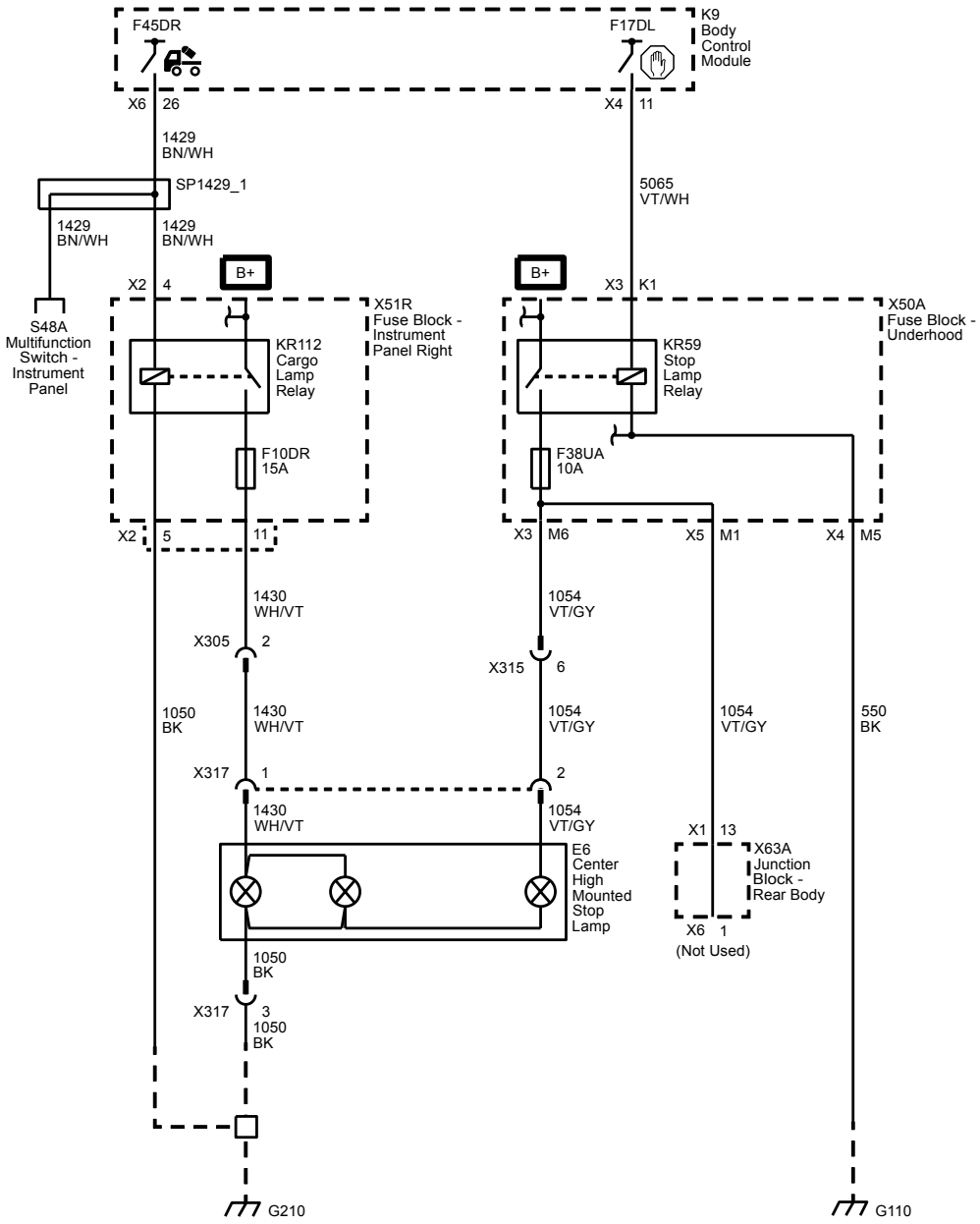

# Mirror Courtesy Lamps (DL3) and License Plate Lamps

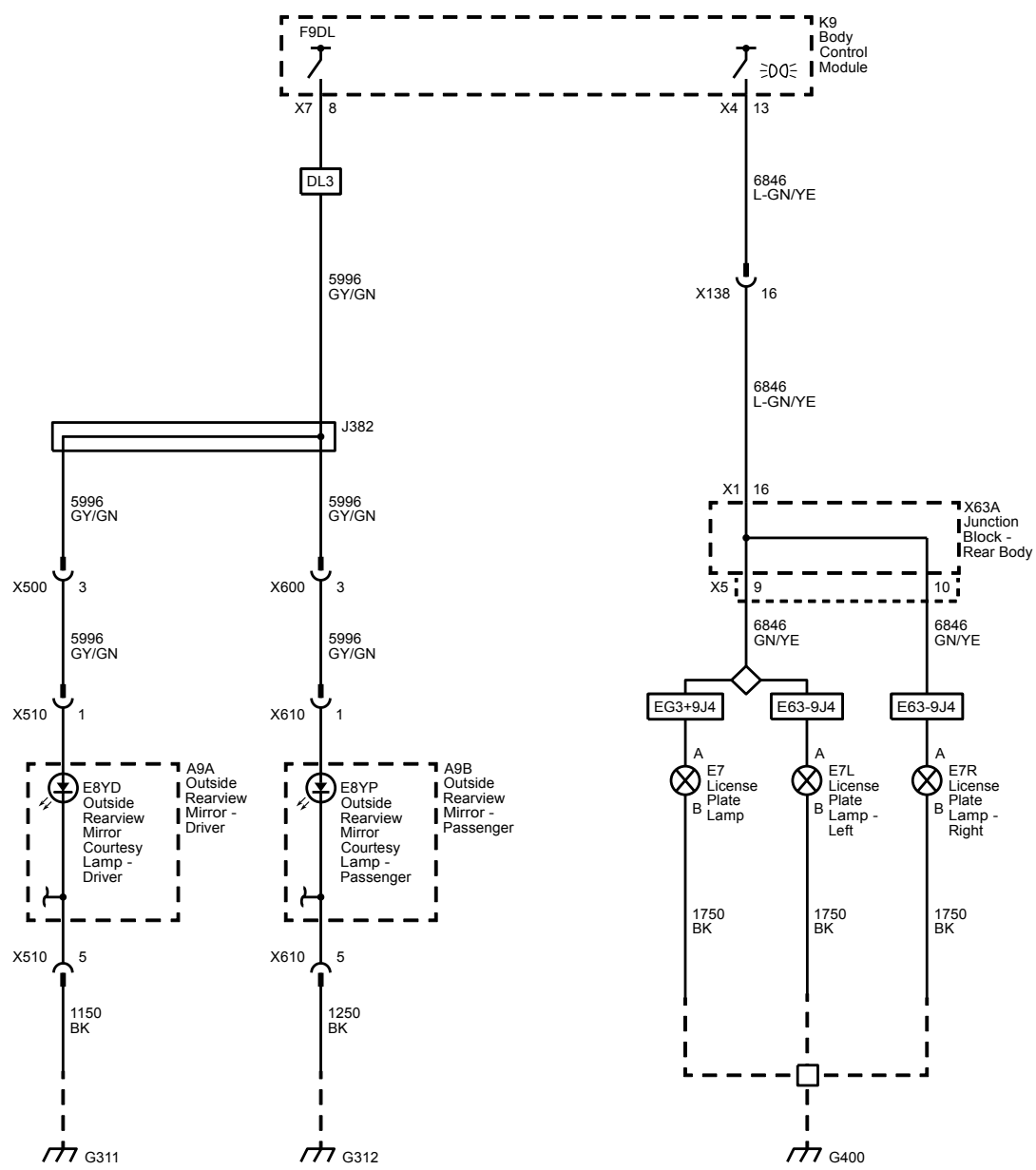

## Mirror Cargo Lamps (DPN or DQS) and Cargo Box Lamps (S0Y or UF2)

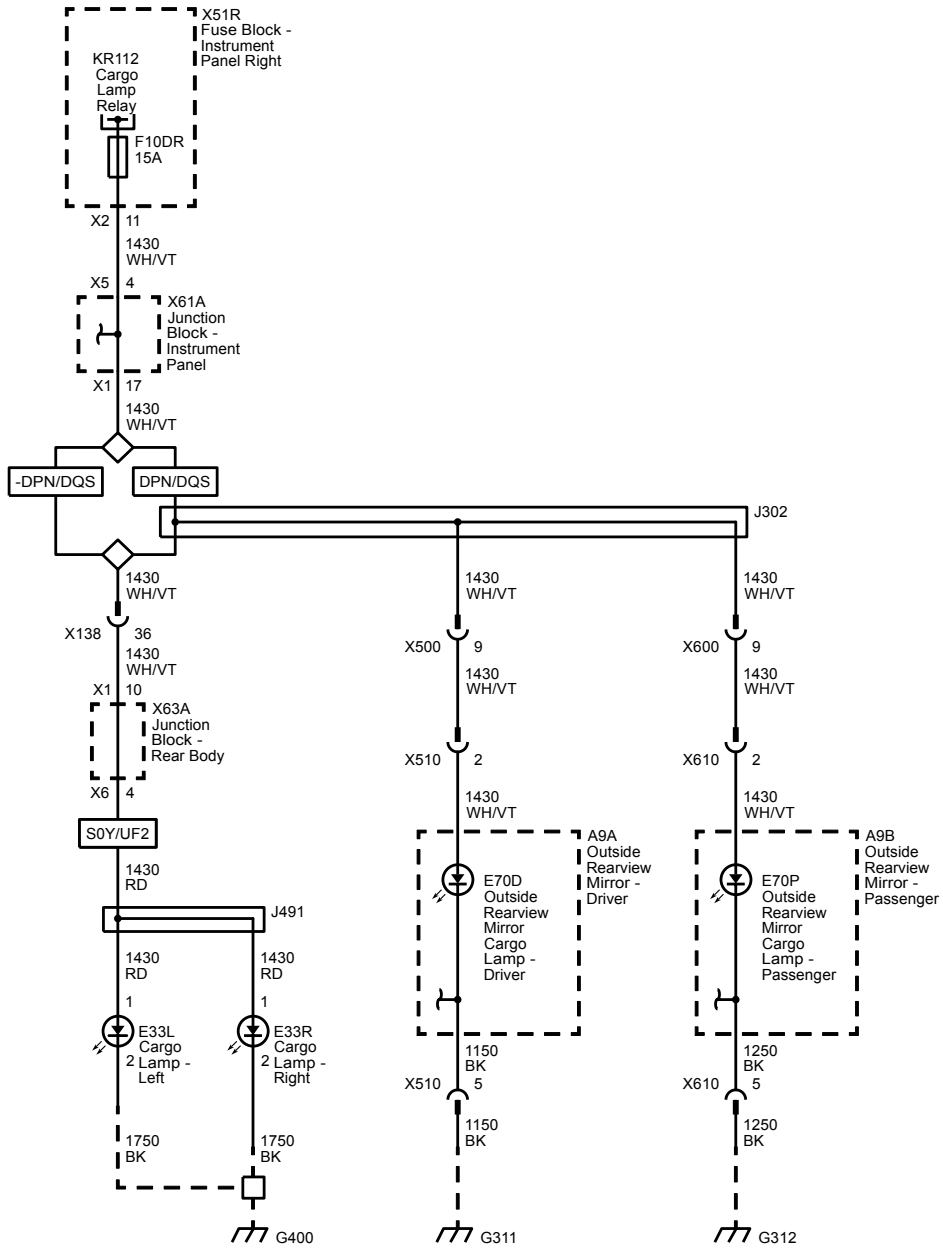

## Controls and Flood Lamps (without E29)

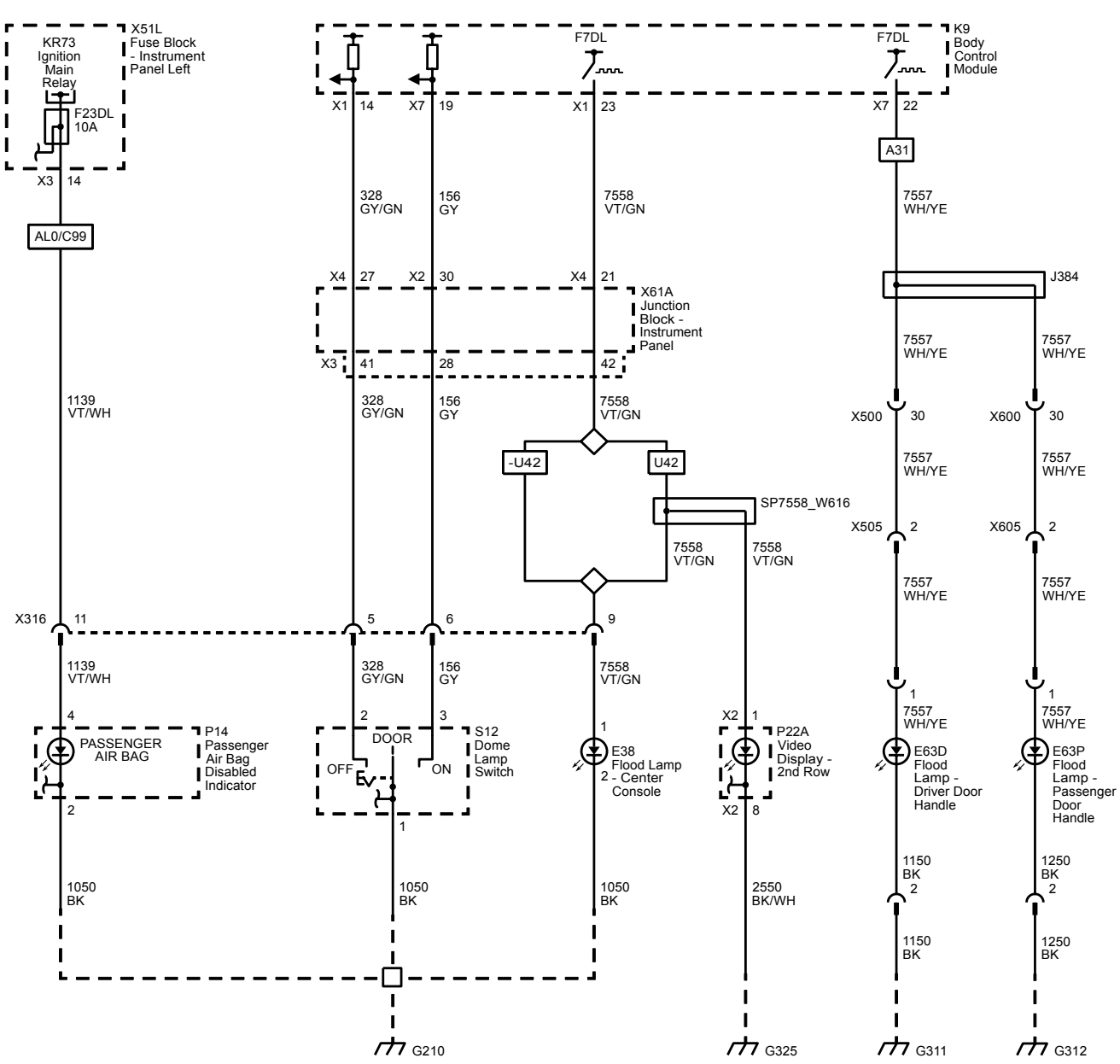

# Floor Console Compartment and Overhead Lamps (without E29)

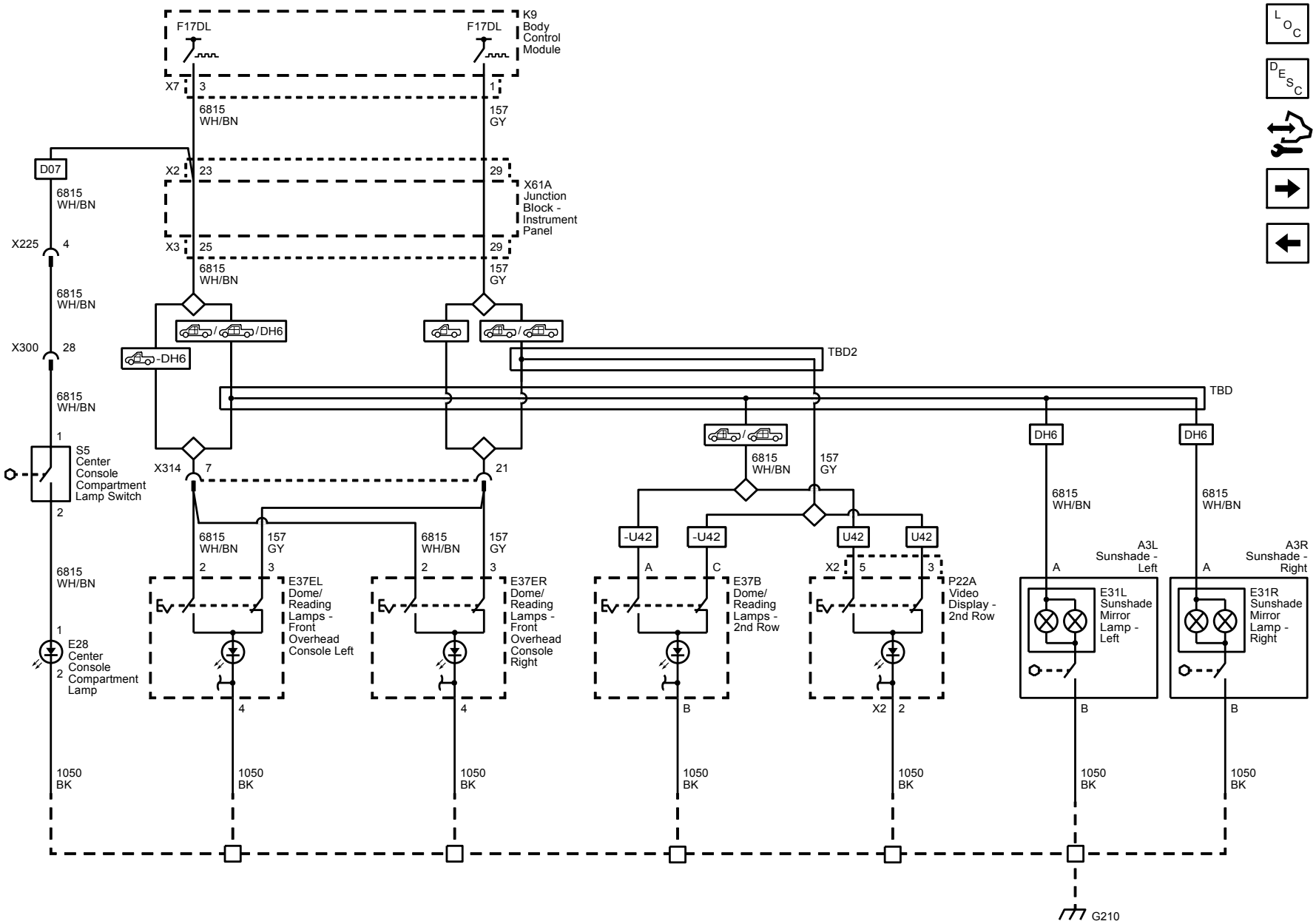

## Controls and Backlight - Instrument Panel

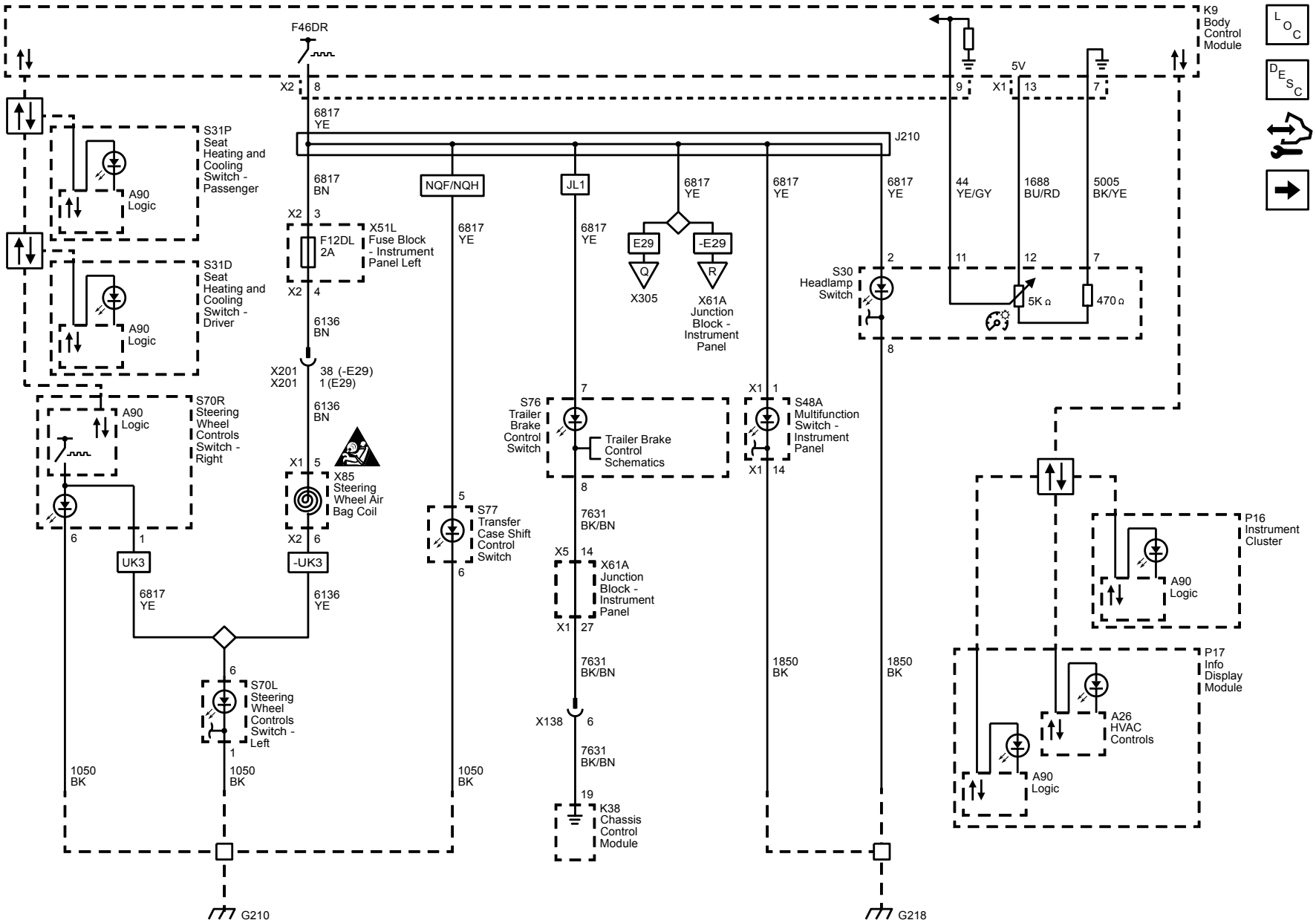

# Backlight - Overhead Lamps

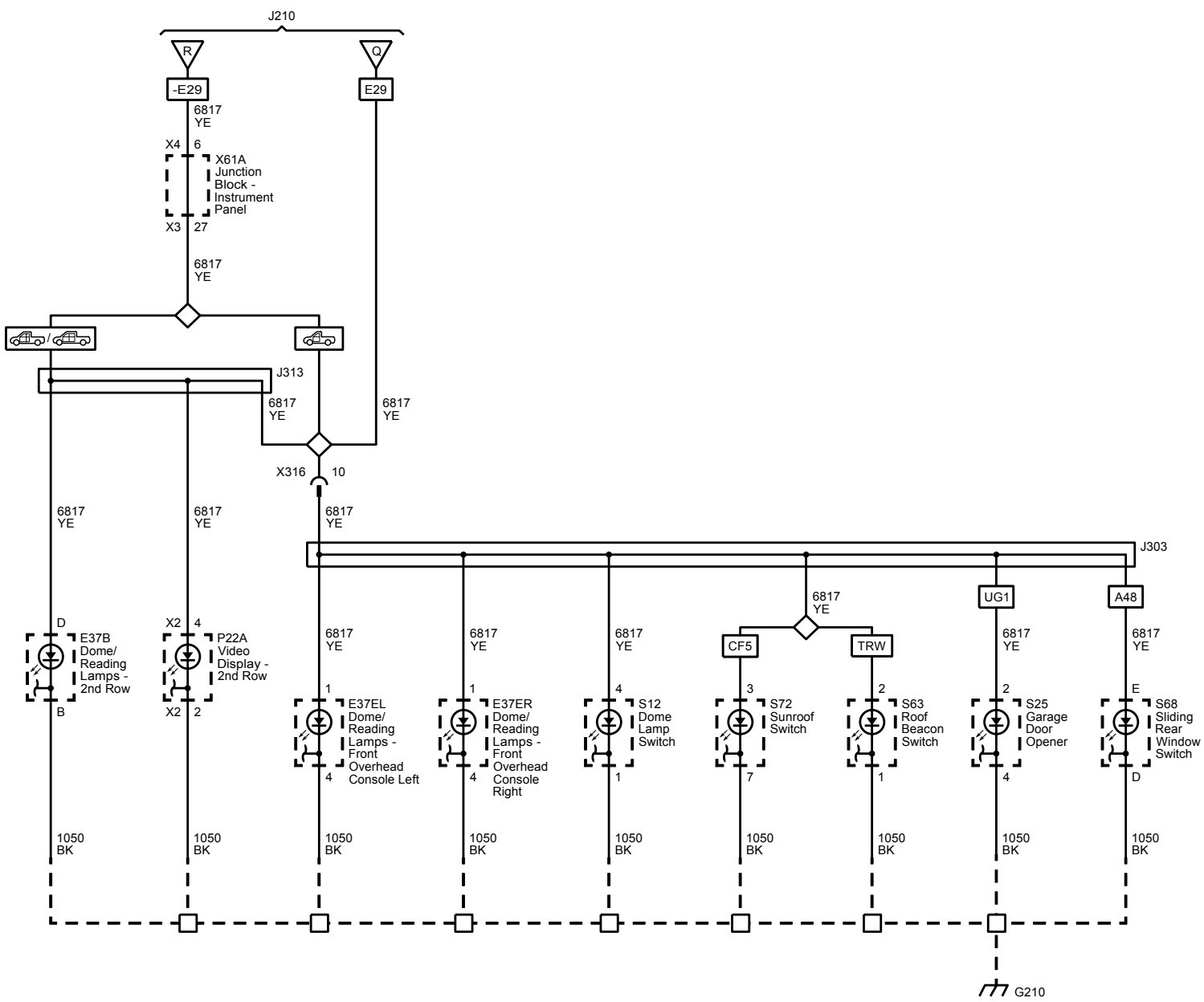

# Backlight - Doors

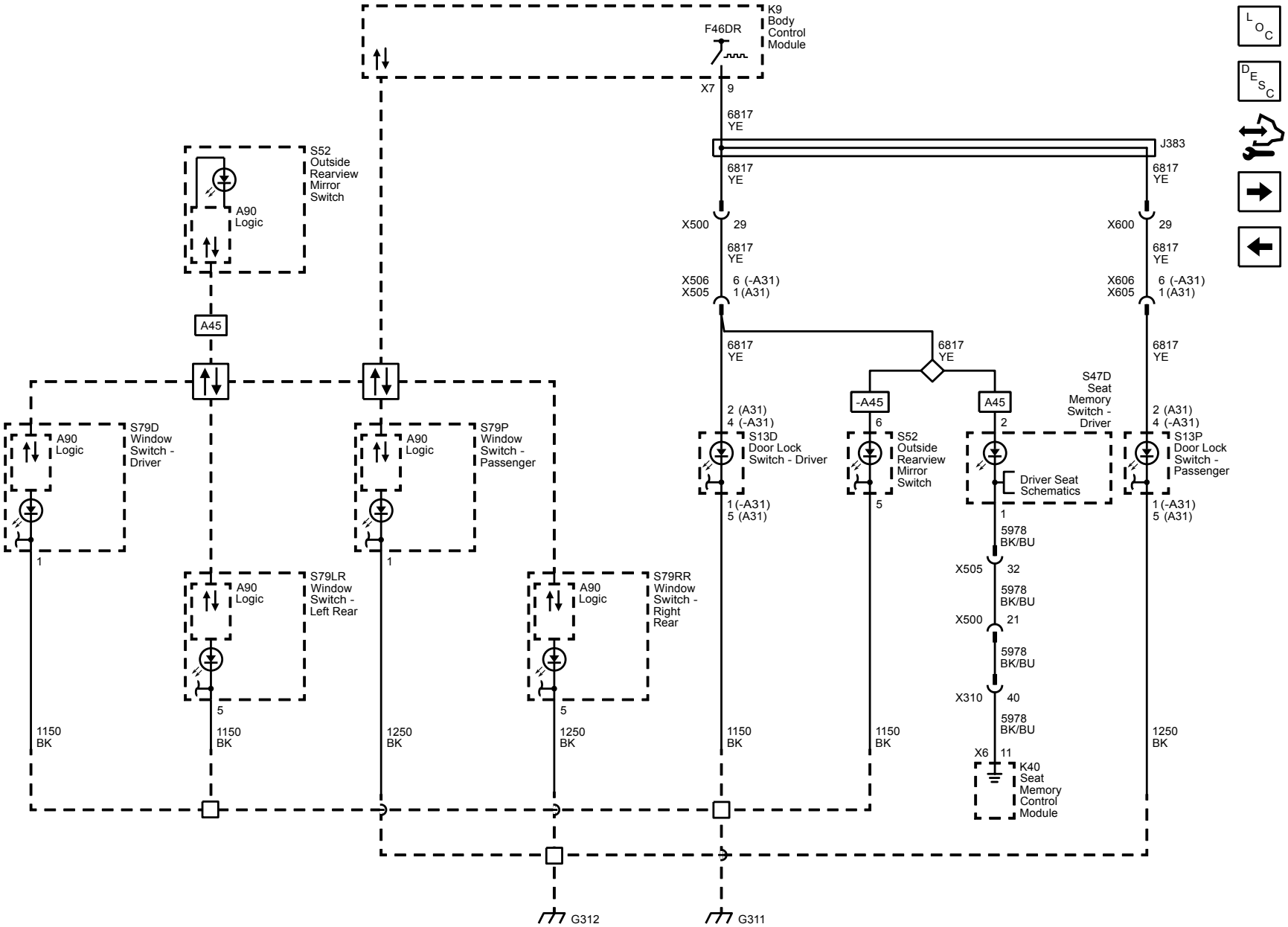

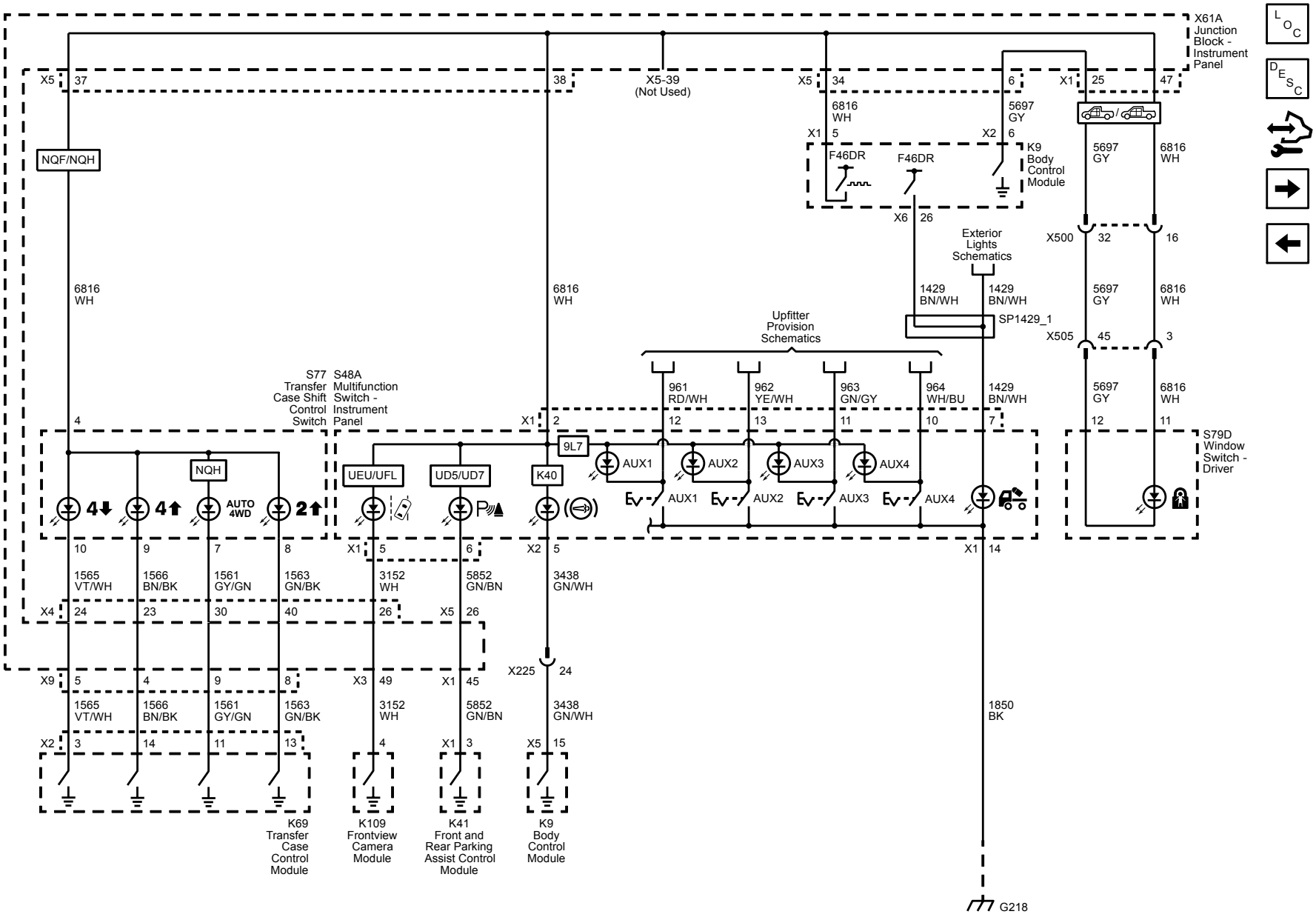
X61A Junction Block - Instrument Panel
X5 37
38
X5-39 (Not Used)
X5 34
6
X1 25
47
6816 WH
5697 GY
X1 5
X2 6
F46DR
F46DR
K9 Body Control Module
X6 26
5697 GY
6816 WH
Exterior Lights Schematics
X500 32
16
1429 BN/WH
1429 BN/WH
SP1429_1
X505 45
3
Upfitter Provision Schematics
961 RD/WH
962 YE/WH
963 GN/GY
964 WH/BU
1429 BN/WH
5697 GY
6816 WH
S77 Transfer Case Shift Control Switch
S48A Multifunction Switch - Instrument Panel
4
X1 2
12
13
11
10
7
12
11
S79D Window Switch - Driver
9L7
AUX1
AUX2
AUX3
AUX4
NQF/NQH
NQH
UEU/UFL
UD5/UD7
K40
4⬇
4⬆
AUTO 4WD
2⬆
10
9
7
8
X1 5
6
X2 5
X1 14
1565 VT/WH
1566 BN/BK
1561 GY/GN
1563 GN/BK
3152 WH
5852 GN/BN
3438 GN/WH
X4 24
23
30
40
26
X5 26
X225 24
X9 5
4
9
8
X3 49
X1 45
1565 VT/WH
1566 BN/BK
1561 GY/GN
1563 GN/BK
3152 WH
5852 GN/BN
3438 GN/WH
1850 BK
X2 3
14
11
13
4
X1 3
X5 15
G218
K69 Transfer Case Control Module
K109 Frontview Camera Module
K41 Front and Rear Parking Assist Control Module
K9 Body Control Module

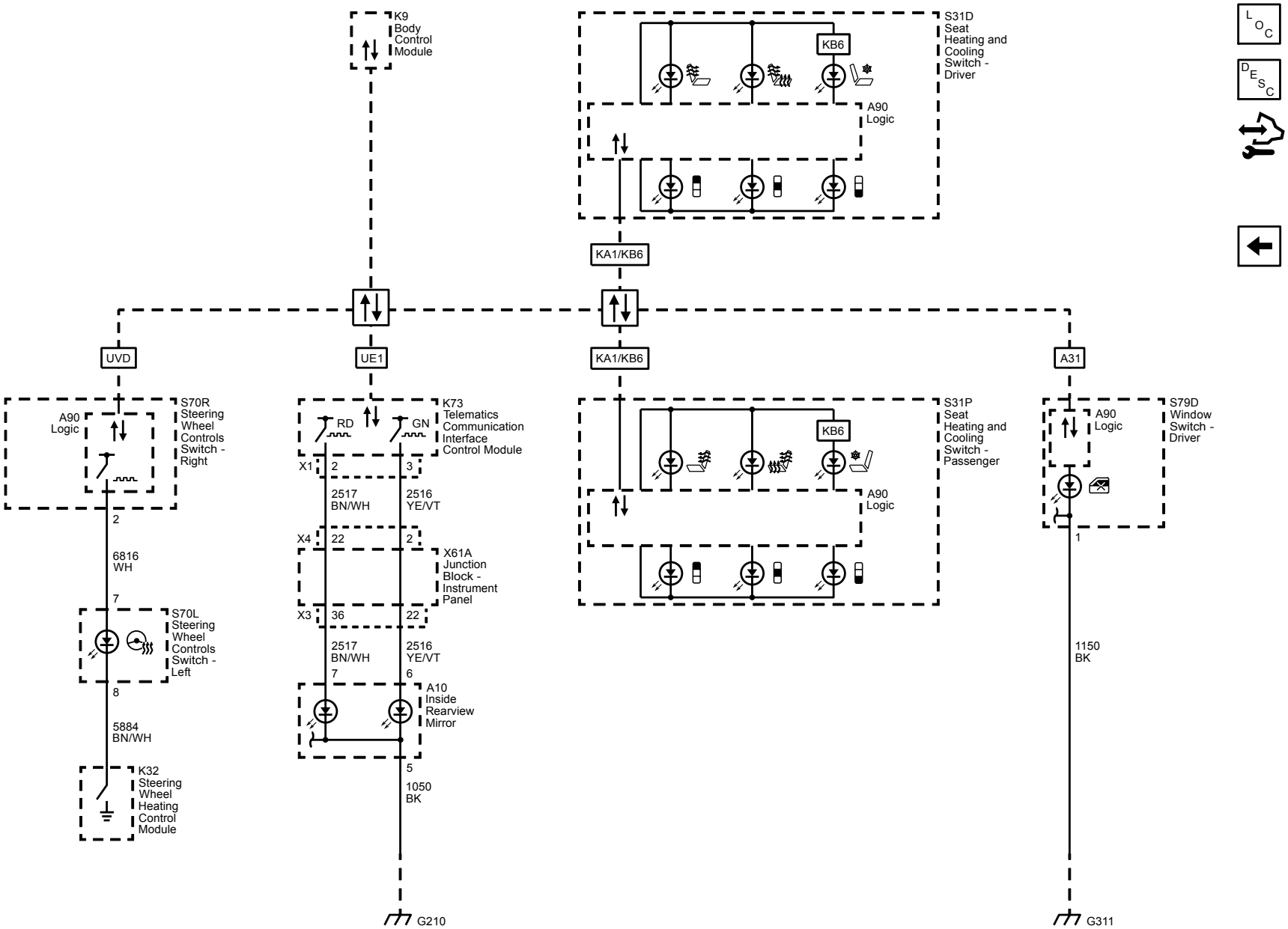
K9
Body
Control
Module
S31D
Seat
Heating and
Cooling
Switch -
Driver
KB6
A90
Logic
KA1/KB6
UVD
UE1
KA1/KB6
A31
A90
Logic
S70R
Steering
Wheel
Controls
Switch -
Right
2
6816
WH
7
S70L
Steering
Wheel
Controls
Switch -
Left
8
5884
BN/WH
K32
Steering
Wheel
Heating
Control
Module
RD
GN
K73
Telematics
Communication
Interface
Control Module
X1
2
3
2517
BN/WH
2516
YE/VT
X4
22
2
X61A
Junction
Block -
Instrument
Panel
X3
36
22
2517
BN/WH
2516
YE/VT
7
6
A10
Inside
Rearview
Mirror
5
1050
BK
G210
S31P
Seat
Heating and
Cooling
Switch -
Passenger
KB6
A90
Logic
A90
Logic
S79D
Window
Switch -
Driver
1
1150
BK
G311

# Description and Operation

## Exterior Lighting Systems Description and Operation

The exterior lighting system consist of the following lamps:

- Adaptive forward lighting
- Automatic headlamp leveling
- Backup lamps
- Daytime running lamps (DRL)
- Hazard warning lamps
- Headlamps
- Park, tail, license, and marker lamps
- Stop lamps
- Turn signal lamps

### Low Beam Headlamps

**Warning: The high intensity discharge system produces high voltage and current. To reduce the risk of severe shocks and burns:**

- **Never open the high intensity discharge system ballast or the arc tube assembly starter.**
- **Never probe between the high intensity discharge system ballast output connector and the arc tube assembly.**

The headlamps consist of 2 high intensity discharge (HID) arc tubes and ballast on each side of the vehicle which provide high and low beams.

The headlamps may be turned ON in 3 different ways:

- When the headlamp switch is placed in the ON position, for normal operation
- When the headlamp switch is placed in the AUTO position, for automatic lamp control (ALC)
- When the headlamp switch is placed in the AUTO position, with the windshield wipers ON in daylight conditions, after a 6 second delay

The body control module (BCM) monitors three signal circuits from the turn signal/multifunction switch. When the turn signal/multifunction switch is in the AUTO position, all three signal circuits are open. When placed in the AUTO position, the BCM monitors inputs from the ambient light sensor to determine if headlamps are required or if daytime running lamps will be activated based on outside lighting conditions. When the turn signal/multifunction switch is placed in the OFF position, the turn signal/multifunction switch headlamps OFF signal circuit is grounded, indicating to the BCM that the exterior lamps should be turned OFF. With the turn signal/multifunction switch in the PARK position, the turn signal/multifunction switch park lamps ON signal circuit is grounded, indicating that the park lamps have been requested. When the turn signal/multifunction switch is placed in the HEADLAMP position, both the turn signal/multifunction switch park lamps ON signal circuit and the turn signal/multifunction switch headlamps ON signal circuit are grounded. The BCM responds to the low beam request by applying ground to the low beam relay control circuit which energizes the low beam relay. With the low beam relay energized, the switch contacts close allowing battery voltage to flow through the low beam fuses. Battery voltage is then applied from the fuses, through the low beam control circuits to the left and right headlamp ballast located in each headlamp assembly. When battery voltage is applied to the headlamp ballast through the low beam control circuits, the ballast charge the starter to start the lamp. High intensity discharge (HID) headlamps do not have filaments like traditional bulbs, instead the starter uses a high voltage transformer to convert the input voltage into a higher voltage. This increased voltage is used in order to create an arc between the electrodes in the bulb.

The BCM will also command the low beam headlamps ON during daylight conditions when the following conditions are met:

- Headlamp switch in the AUTO position
- Windshield wipers ON
- Vehicle in any gear but PARK

When the BCM commands the low beam headlamps ON, the operator will notice the interior backlighting for the instrument cluster and the various other switches dim to the level of brightness selected by the instrument panel dimmer switch.

#### Run Up Of The Lamp

Each ballast requires higher amperage in order to ensure normal startup and run up of the lamp. Run up is the term used to describe the extra power level given to the bulb. The input current during the steady state operation is lower that the start up amperage. After the lamp receives the strike from the starter and the arc is established, the ballast uses its operating voltage in order to provide the run up power needed in order to keep the lamp on. The lamp rapidly increases in intensity from a dim glow to a very high-intensity, bright light called a steady state. Within a few seconds of the arc being established in the bulb, the majority of steady state is complete. 100 percent of the steady state is completed shortly there after. A high watt power level is necessary in order to bring the lamp to a steady state in such a short period of time. The high watt power level allows the lamp to meet the SAE light vs. time specification.

#### When To Change The HID Bulb

Bulb failure, end of life occurs when the bulb gets old and becomes unstable. The bulb may begin shutting itself off sporadically and unpredictably at first, perhaps only once during a 24-hour period. When the bulb begins shutting itself off occasionally, the ballast will automatically turn the bulb back on again within 0.5 seconds. The ballast will re-strike the bulb so quickly that the bulb may not appear to have shut off. As the bulb ages, the bulb may begin to shut off more frequently, eventually over 30 times per minute. When the bulb begins to shut off more frequently, the ballast receives excessive, repetitive current input . Repetitive and excessive restarts or re-strikes, without time for the ballast to cool down, will permanently damage the ballast. As a safeguard, when repetitive re-strikes are detected, the ballast will not attempt to re-strike the lamp. The ballast then shuts down and the bulb goes out.

The following symptoms are noticeable signs of bulb failure:

- Flickering light, caused in the early stages of bulb failure
- Lights go out, caused when the ballast detects excessive, repetitive bulb re-strike

- Color change—The lamp may change to a dim pink glow.

Input power to the ballast must be terminated in order to reset the ballast's fault circuitry. In order to terminate the input power to the ballast, turn the lights off and back on again. Turning the lights off and back on again resets all of the fault circuitry within the ballast until the next occurrence of excessive, repetitive bulb re-strikes. When excessive, repetitive bulb re-strikes occur, replace the starter/arc tube assembly. The ballast will begin the start-up process when the starter/arc tube assembly is replaced. Repeatedly resetting the input power can overheat the internal components and cause permanent damage to the ballast. Allow a few minutes of cool-down time in between reset attempts.

### Light Color

White light has a different color rating than regular headlamps. The range of white light that is acceptable is broad when compared to halogens. Therefore, some variation in headlight coloring between the right and left headlamp will be normal. One high intensity discharge (HID) at the end of the normal range may appear considerably different in color from one at the other end of the range. Difference in color is normal. Replace the arc tube only if the arc tube is determined to be at the bulb failure stage.

## High Beam Headlamps

When the low beam headlamps are ON and the turn signal/multifunction switch is placed in the high beam position, ground is applied to the BCM through the high beam signal circuit. The BCM responds to the high beam request by applying ground to the high beam relay control circuit which energizes the high beam relay. With the high beam relay energized, the switch contacts close allowing battery voltage to flow through the left and right high beam fuses to the high beam control circuits and on to the left and right high beam solenoid actuators within the headlamp assemblies. Once the high beam solenoid actuators are active, the solenoid shutters open in each headlamp assembly exposing the remaining portion of the headlamp that was covered by the shutters illuminating the high beams at full intensity.

## Adaptive Forward Lighting (AFL)

The AFL consist of the following components:

- Headlamp control module
- Headlamp actuator - left
- Headlamp actuator - right

Battery positive voltage is applied to the headlamp control module at all times and when the ignition switch is in the RUN and CRANK positions. The headlamp control module has an operational voltage range of about 10.5-16 volts and is only fully functional when the ignition switch is in the RUN position. The voltage input from the ignition switch wakes the headlamp control module microprocessor. The headlamp control module receives serial data messages from the engine control module (ECM), transmission control module (TCM), electronic brake control module (EBCM), and body control module (BCM) with regards to power mode, speed, steering angle, transmission gear selection, and headlamp switch status. The headlamp control module calculates the headlamp angle and sends commands to the left and right headlamp actuators. The headlamp actuators drive the headlamps to the position commanded by the headlamp control module. The headlamp control module monitors the headlamp actuator motor control circuits for proper circuit continuity and for shorts to ground or voltage. If a malfunction is detected, a DTC will be stored in memory and the driver will be notified with a message displayed over the driver information center (DIC) located on the instrument panel cluster (IPC).

The headlamp control module controls the left headlamp movement by 15 degrees to the left and 5 degrees to the right, and the right headlamp movement by 5 degrees to the left and 15 degrees to the right. The direction the headlamps move is controlled by the steering wheel angle and is limited by steering angles of approximately +/- 90 degrees. The AFL will not operate with the transmission in reverse or at vehicle speeds less than 2 mph. Movement of the headlamps is restricted at low vehicle speeds and full movement of the lamps is not allowed until vehicle speed is greater than approximately 30 mph. The following conditions must be met before the AFL will operate:

- Headlamp switch in the AUTO position and high or low beam headlamps must be active
- Steering angle position must be received from the EBCM with the steering signal validity bit set
- Vehicle speed must be received from the ECM with the steering signal validity bit set
- Transmission gear position must be received from the TCM with the transmission gear position validity bit set

## Automatic Headlamp Leveling

The Automatic Headlamp Leveling Systems consist of the following components:

- Headlamp control module
- Headlamp leveling actuator - left
- Headlamp leveling actuator - right
- Suspension position sensor - front
- Suspension position sensor - rear

The automatic headlamp leveling system automatically maintains the vertical alignment of the headlamps when the vehicle load and driving conditions change. Each headlamp assembly contains a headlamp leveling motor that is controlled by the headlamp control module. The front and rear suspension position sensors provide the headlamp control module with suspension position information. Each sensor receives a 5-volt reference, signal, and low reference circuits from the headlamp control module. The sensors are connected to the control arms of the front and rear suspension. As the vehicle travels, the suspension compresses and rebounds moving the suspension position sensor arms. This causes the signal output of the sensor to change. The headlamp control module compares the information from both suspension position sensors and adjusts the headlamp leveling as needed.

## Daytime Running Lamps (DRL)

The daytime running lamps (DRL) will illuminate continuously when the following conditions are met:

- The ignition is in the RUN or CRANK position
- The shift lever is out of the PARK position for vehicles equipped with automatic transmissions or the parking brake is released for vehicles with manual transmissions
- The low and high beam headlamps are OFF

The ambient light sensor is used to monitor outside lighting conditions. The ambient light sensor provides a voltage signal that will vary between 0.2 and 4.9 volts depending on outside lighting conditions. The body control module (BCM) provides a 5-volt reference signal to the ambient light sensor and the HVAC control module provides a low reference ground. The BCM monitors the ambient light sensor signal circuit to determine if outside lighting conditions are correct for either daytime running lights (DRL) or automatic lamp control (ALC) when the headlamp switch is in the AUTO position. In daylight conditions the BCM will command the designated DRLs ON. During low

light conditions the BCM will command the low beam headlamps ON. Any function or condition that turns on the headlamps will cancel DRL operation.

### Automatic Lamp Control

Place the turn signal/multifunction switch in the AUTO position for automatic lamp control. During automatic lamp control the headlamps will be off during daylight conditions but will turn on when the ambient light sensor detects low outside light level. The ambient light sensor is a light sensitive transistor that varies the voltage signal to the HVAC control module. The HVAC control module sends a signal to the body control module (BCM) via serial data commanding the BCM to apply ground to the headlamp low beam relay control circuit. This energizes the low beam relay, closing the switched side and applies battery voltage to the LEFT and RIGHT LOW BEAM fuses. Battery voltage is applied from the low beam fuses, through the low beam voltage supply circuits to low headlamp assemblies.

### Flash to Pass (FTP)

When the turn signal/multifunction switch is momentarily placed in the flash to pass (FTP) position, ground is applied to the turn signal/multifunction switch. The turn signal/multifunction switch applies ground to the body control module (BCM) through the FTP switch signal circuit. The BCM responds to the FTP request by applying ground to the high beam relay control circuit. This energizes the high beam relay, closing the switch side contacts of the high beam relay, applying battery voltage to the left and right high beam fuses. Battery voltage is applied from the high beam fuses through the high beam control circuit to the high beam headlamp assemblies. This causes the high beam headlamps to illuminate at full brightness momentarily.

### Hazard Lamps

The hazard flashers may be activated in any power mode. The hazard switch signal circuit is momentarily grounded when the hazard switch is pressed. The body control module (BCM) responds to the hazard switch signal input by supplying battery voltage to all four turn signal lamps in an ON and OFF duty cycle. When the hazard switch is activated, the BCM sends a serial data message to the instrument panel cluster (IPC) requesting both turn signal indicators to be cycled ON and OFF.

The I/P dimmer switch controls the brightness of the interior backlighting components. When the I/P dimmer switch is placed in a desired brightness position, the body control module (BCM) receives a signal from the I/P dimmer switch and responds by applying a pulse width modulated (PWM) voltage to the hazard switch light emitting diode (LED) backlighting control circuit illuminating the LED to the desired level of brightness.

### Park, Tail, and License Lamps

When the headlamp switch is placed in the HEAD or PARK position, ground is applied to the park lamp switch ON signal circuit to the body control module (BCM). The BCM responds by applying voltage to the park lamps, tail lamps, and license lamps control circuits illuminating the park, tail, and license lamps.

### Stop Lamps

The brake pedal position (BPP) sensor is used to sense the action of the driver application of the brake pedal. The BPP sensor provides an analog voltage signal that will increase as the brake pedal is applied. The body control module (BCM) provides a low reference signal and a 5-volt reference voltage to the BPP sensor. When the variable signal reaches a voltage threshold indicating the brakes have been applied, the BCM will apply battery voltage to the left and right stop lamp control circuits as well as the center high mounted stop lamp (CHMSL) control circuit illuminating the left and right stop lamps and the CHMSL.

### Turn Signal Lamps

Ground is applied at all times to the turn signal/multifunction switch. The turn signal lamps may only be activated with the ignition switch in the ON or START positions. When the turn signal/multifunction switch is placed in either the TURN RIGHT or TURN LEFT position, ground is applied to the body control module (BCM) through either the right turn or left turn signal switch signal circuit. The BCM responds to the turn signal switch input by applying a pulsating voltage to the front and rear turn signal lamps through there respective control circuits. When a turn signal request is received by the BCM, a serial data message is sent to the instrument panel cluster (IPC) requesting the respective turn signal indicator be pulsed ON and OFF.

### Backup Lamps

With the engine ON and the transmission in the REVERSE position, the transmission control module (TCM) sends a serial data message to the body control module (BCM). The message indicates that the gear selector is in the REVERSE position. The BCM applies battery voltage to the backup lamps control circuit illuminating the backup lamps. Once the driver moves the gear selector out of the REVERSE position, a message is sent by the TCM via serial data requesting the BCM to remove battery voltage from the backup lamps control circuit. The engine must be ON for the backup lamps to operate.

### Battery Run Down Protection/Inadvertent Power

To provide battery run down protection, the exterior lamps will be deactivated automatically under certain conditions. The BCM monitors the state of the headlamp switch. If the park or headlamp switch is ON when the ignition switch is placed in either the CRANK or RUN position and then placed in the OFF position, the BCM initiates a 10 min timer. At the end of the 10 min, the BCM will turn off the control power output to the park lamp controls as well as the headlamp relay coils, deactivating the exterior lamps. This feature will be cancelled if any power mode other than OFF becomes active. The BCM will disable battery run down protection if any of the following conditions exist. The park or headlamp switch is placed in the ON to OFF position, and back to the ON position during battery run down protection. The BCM determined that the park or headlamp switch was not active when the ignition was turned OFF.

## Interior Lighting Systems Description and Operation

### Interior Lamps

The interior lighting system consist of two groups. This first group includes lamps that may not be dimmed.

- Dome lamps
- I/P compartment lamps
- Reading lamps
- Rear compartment courtesy lamp
- Sunshade mirror lamps

### Dome Lamps

The dome lamp switch has 3 positions: DOOR, OFF, and ON. The ON position provides a ground for continuous operation and the dome lamp will remain illuminated until the switch is placed in either the DOOR or OFF position. When in the DOOR position, the dome lamp operation is controlled by the body control module (BCM). When any door is opened, the door ajar switch contacts close and the BCM receives a door-open input. The BCM illuminates the dome lamp when any door is opened or a door lock/unlock request is activated with the key fob. After all doors have been closed, the dome lamp will remain illuminated approximately 3 seconds after the last door closes. When the driver places the dome lamp switch in the OFF position, the dome lamp will be disabled. In the event that the dome lamp were to remain illuminated for more than 10 minutes with the ignition switch in the OFF position and no doors opened, the BCM will deactivate the dome lamp control circuit to prevent total battery discharge. The dome lamps will turn OFF using the theater dimming feature when controlled by the BCM.

### Center Console Compartment Lamp

The inadvertent power supply voltage circuit from the BCM provides battery voltage to the center console compartment lamp. When the center console is opened, the center console compartment lamp switch contacts close providing a path to ground and the center console compartment lamp illuminates. If the operator inadvertently leaves the center console compartment door open with the center console compartment lamp ON, the BCM will turn all interior lamps OFF after 10 minutes has passed since any switch activation has been detected by the BCM.

### Instrument Panel (I/P) Compartment Lamp

The inadvertent power supply voltage circuit from the BCM provides battery voltage to the I/P compartment (glove box) lamp. When the I/P compartment is opened, the I/P compartment lamp switch contacts close providing a path to ground and the I/P compartment lamp illuminates. If the operator inadvertently leaves the I/P compartment door open with the I/P compartment lamp ON, the BCM will turn all interior lamps OFF after 10 minutes has passed since any switch activation has been detected by the BCM. The I/P compartment lamp is permanently grounded at ground G204.

### Reading Lamps

The inadvertent power supply voltage circuit from the BCM provides battery positive voltage to each reading lamp. When a reading lamp switch is activated, the switch contacts close providing a path to ground and the reading lamp illuminates. If the operator inadvertently leaves a reading lamp ON, the BCM will turn all interior lamps OFF after 10 minutes has passed since any switch activation has been detected by the BCM.

### Rear Compartment Courtesy Lamp

When the rear compartment is opened, the rear compartment lid latch opens providing a rear compartment open input signal to the BCM. The BCM responds by applying battery voltage to the rear compartment courtesy lamp control circuit illuminating the rear compartment courtesy lamp.

### Sunshade Mirror Lamps

The inadvertent power supply voltage circuit from the BCM provides battery voltage to each set of sunshade mirror lamps. When the sunshade mirror cover is opened, a switch closes providing ground and the sunshade lamps illuminate. If the operator inadvertently leaves a sunshade mirror cover open with the lamps ON, the BCM will turn all interior lamps OFF after 10 minutes has passed since any switch activation has been detected by the BCM.

### Keyless Entry Interior Illumination

When the operator uses the keyless entry transmitter in order to unlock the doors, the BCM receives a door-unlock signal. The BCM must receive inputs from various systems that indicate that the ignition switch is OFF, the courtesy lamp switch is OFF, and all doors are closed before the BCM will activate the interior lamps. After all doors have been closed, the courtesy lamps will turn OFF immediately if the ignition switch is turned to the ON position, the door locks are LOCKED, or approximately 20 seconds after the last door closes. The BCM will turn off the courtesy lamps through the theater dimming feature. The BCM keeps the courtesy lamps on for 40 seconds after an alarm event is completed.

### Interior Lamps Dimming

The second group includes lamps which may be dimmed. This group may use a combination of light emitting diodes (LED), incandescent lamps, and pulse width modulation (PWM) illumination.

- Dome/reading lamps – front
- Dome/reading lamps – rear
- Door lock switch – driver
- Door lock switch – passenger
- Headlamp switch
- Hazard switch
- HVAC control head assembly
- Ignition mode switch
- Multifunction switch – instrument panel
- Outside rearview mirror switch
- Park brake switch

- Radio
- Rear compartment lid unlatch switch
- Steering wheel control switch – left
- Steering wheel control switch – right
- Sun roof switch
- Sun roof tilt switch
- Window switch – passenger

With the headlamp switch in the PARK or HEAD position, the park lamp switch signal circuit provides an input to the body control module (BCM). The BCM responds by applying voltage to the park lamps as well as the backlight dimming control circuits illuminating all components with interior backlighting. All interior backlighting turns ON at the dimming level indicated by the instrument panel (I/P) dimmer switch. The instrument panel (I/P) dimmer switch is a momentary type switch and utilizes a resistor ladder to increase and decrease the brightness of the interior backlighting components. The I/P dimmer switch provides a voltage signal to the BCM that will increase as the brightness of the lights are increased and decrease as the brightness of the lights are decreased. The BCM provides a low reference signal and a B+ circuit to the I/P dimmer switch. When the I/P dimmer switch is held in the desired position, the dimmed voltage setting is applied from the I/P dimmer switch through the I/P dimmer switch signal circuit to the BCM. The BCM interprets the signal and applies a pulse width modulated (PWM) voltage through the backlighting control circuits illuminating the interior backlighting to the requested level of brightness.

### Battery Rundown Protection/Inadvertent Power

The BCM inadvertent power supply voltage circuit provides battery voltage to all of the interior courtesy lamps. In the event that any of these lamps were to remain illuminated for a period of more than 10 minutes with the ignition switch in the OFF position, the BCM will deactivate the inadvertent power supply voltage circuit to prevent total battery discharge. If the ignition switch is turned to any position other than OFF, or if a lamp switch is activated during this 10 minute period, the timer resets for another 10 minutes.

# Mirrors

## Schematic and Routing Diagrams

### Inside Rearview Mirror Schematics

#### Inside Rearview Mirror

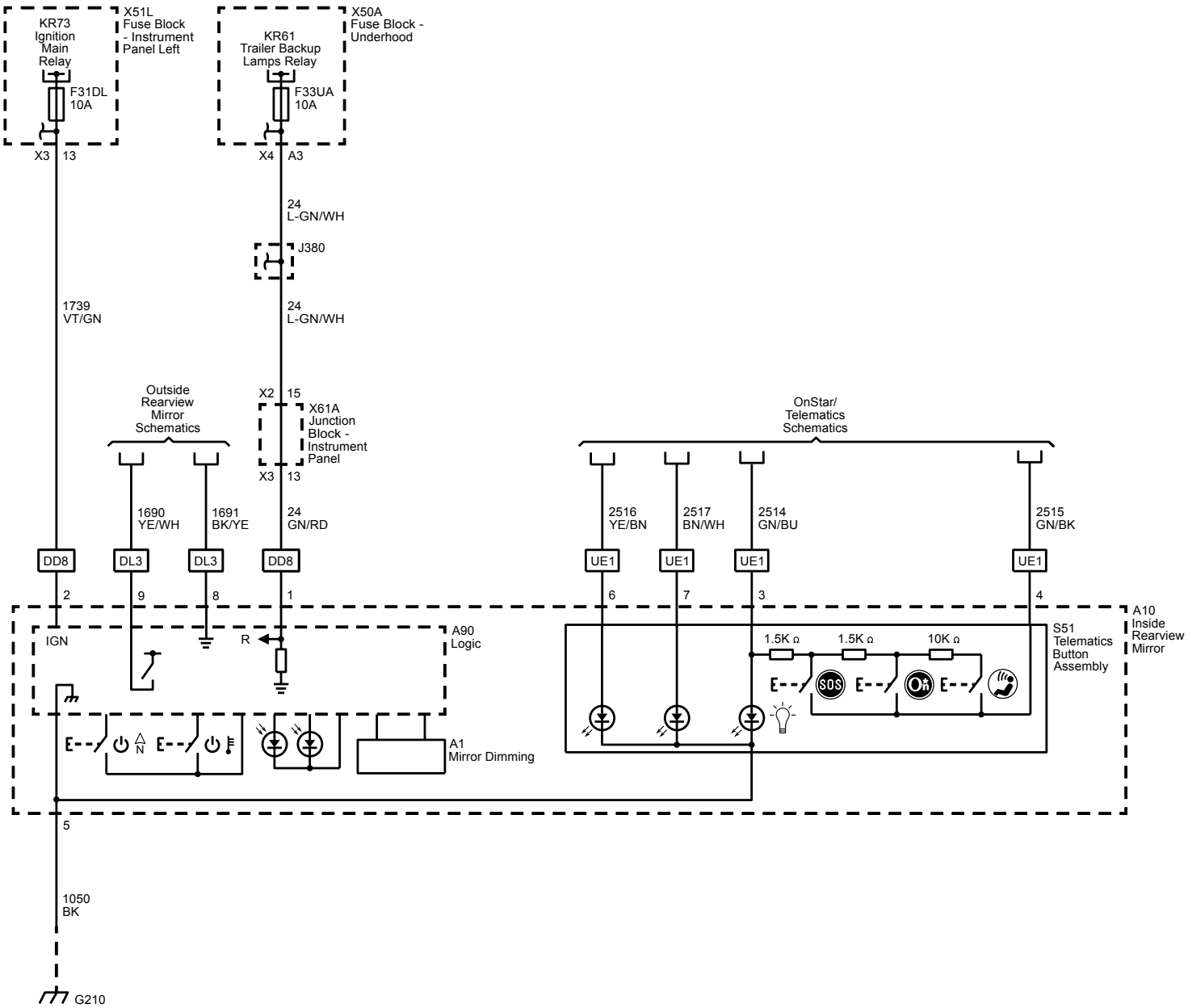

# Outside Rearview Mirror Schematics

## Controls and Driver (A45)

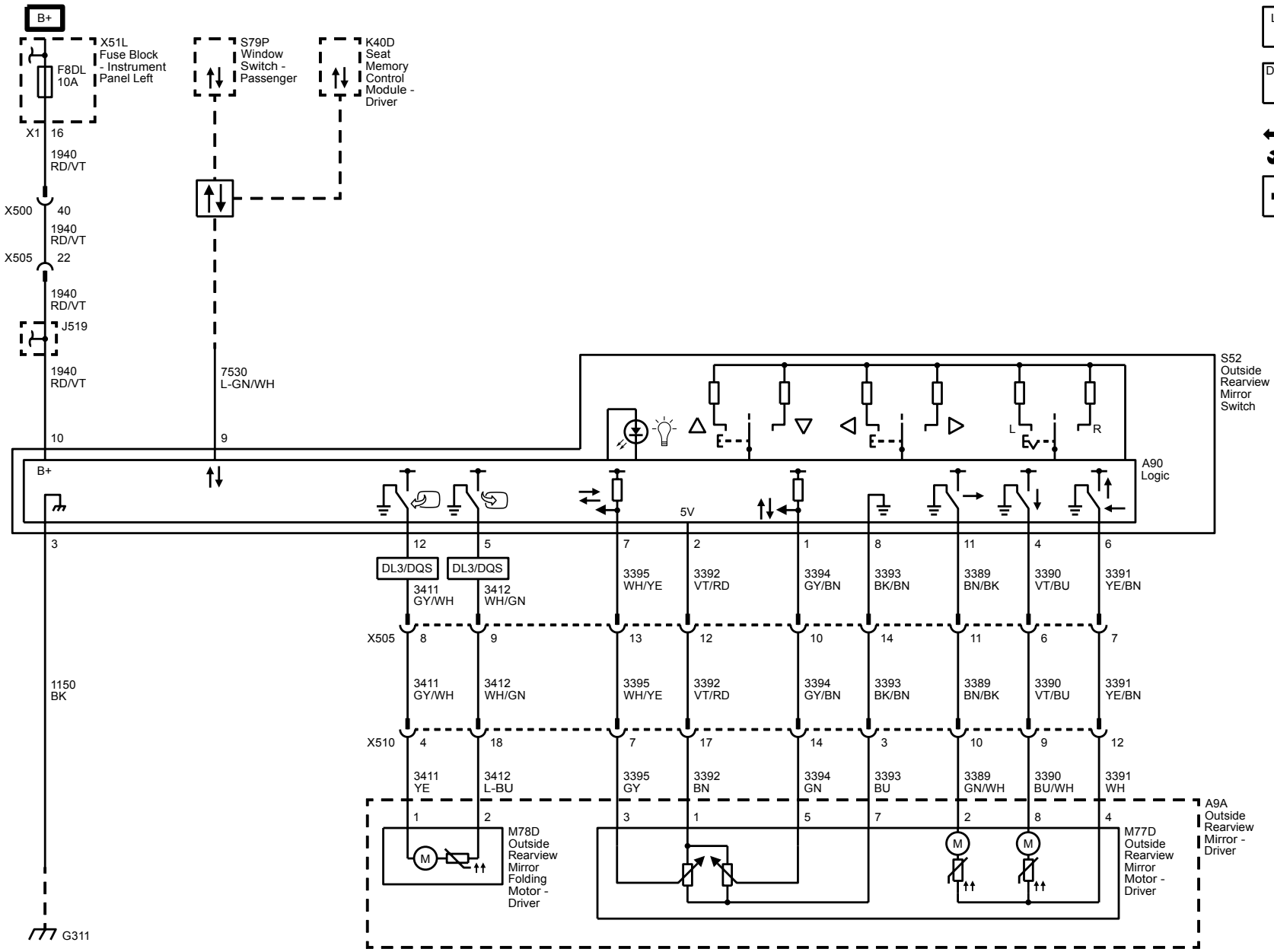

## Passenger (A45)

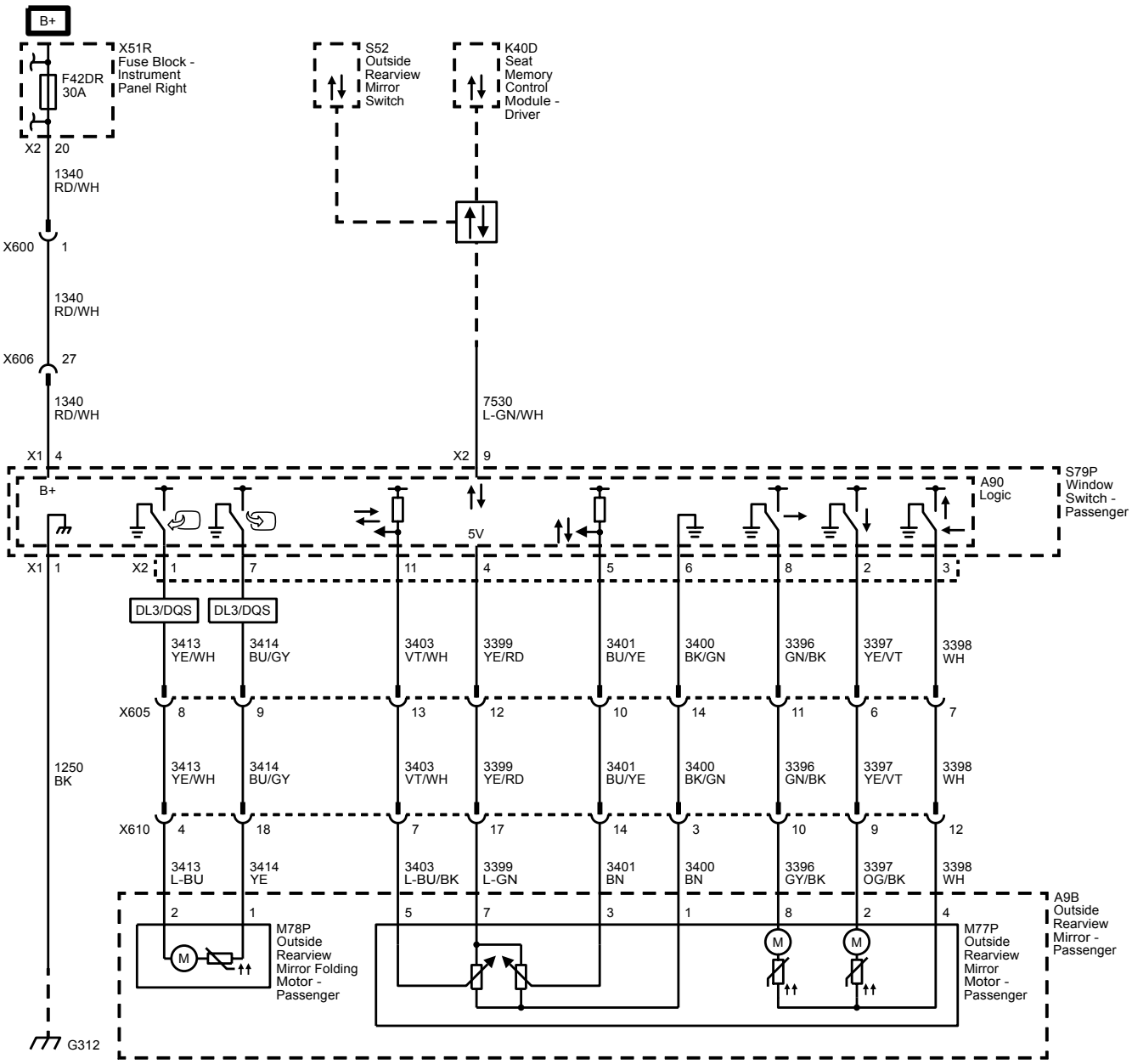

## Position (DL3, DL8, DPN or DQS) without (A45)

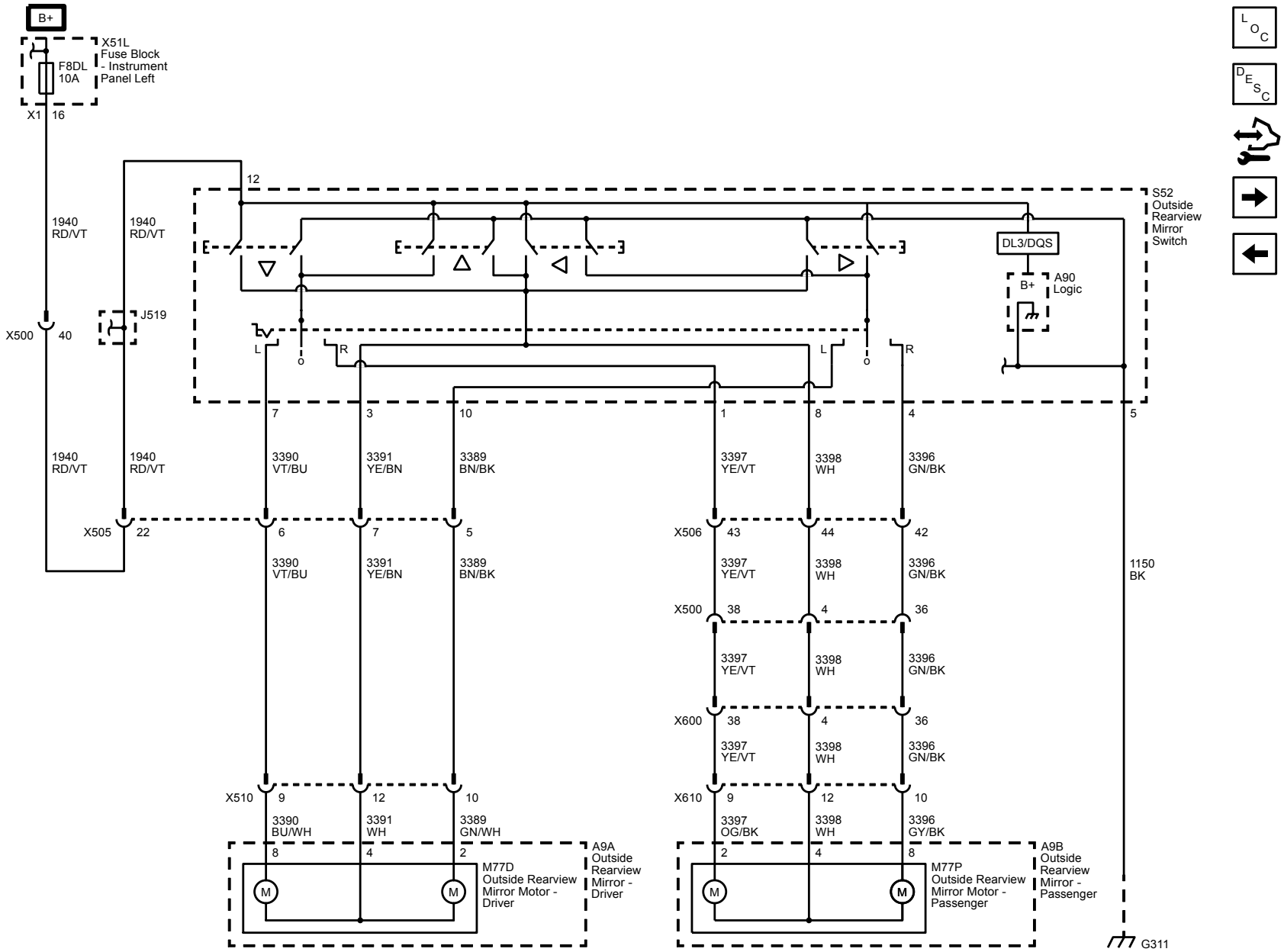

## Folding (DL3 or DQS) without (A45)

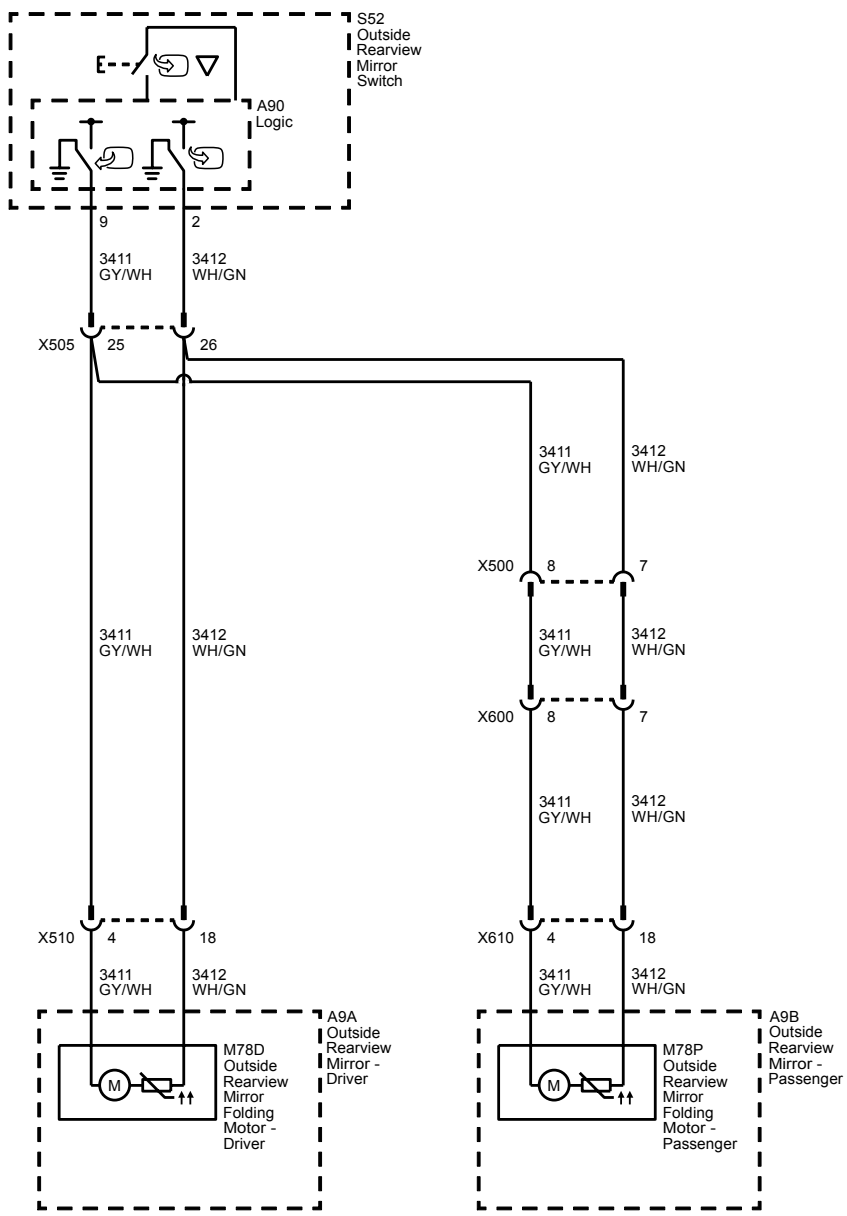

## Dimming (DL3) and Heating (DL8, DL3, DPN or DQS)

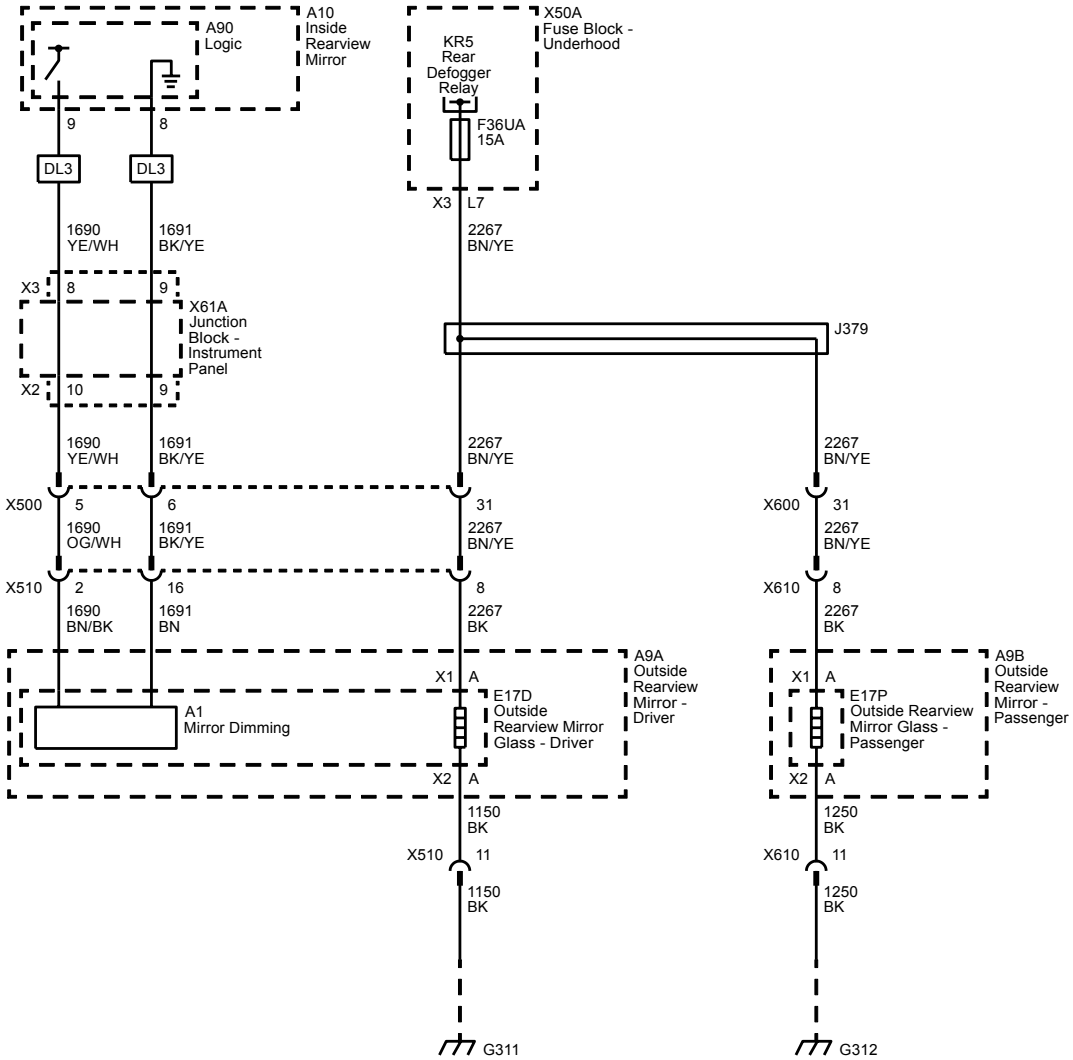

# Description and Operation

## Outside Mirror Description and Operation (With A45)

### Power Mirror System Components

The power mirror system consists of the following components:

- Memory Seat Control Module
- Outside Rearview Mirror Switch
- Passenger Window Switch
- Driver Outside Rearview Mirror
- Passenger Outside Rearview Mirror

### Power Mirrors with A45 Block Diagram

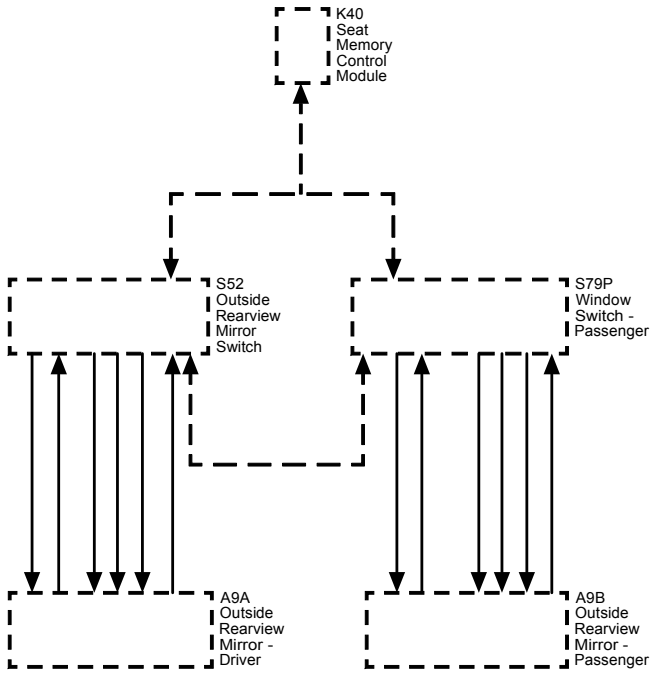


### Power Mirror System Controls

The outside mirror switch and passenger window switch are on a serial data circuit with the memory seat control module as the master. The mirror select and directional control switches are inputs to the memory seat module through the serial data circuit. When the memory seat module receives switch inputs from the outside mirror switch, mirror output commands are sent to the appropriate switch through the serial data circuit. The outside mirror switch and passenger window switch control the left and right outside rear view mirrors through bi-directional motor control circuits. The motor control circuits are floating while in an inactive state and the switches will apply power and ground to the control circuits as necessary to move the mirror in the commanded direction.

Mirror position is determined by both horizontal and vertical position sensors in each of the power mirrors. The outside mirror switch and passenger window switch supply a 5 V reference, low reference, and horizontal and vertical position signal circuits to these sensors. The signal circuits are referenced from 5 V by the switches and the signal circuit voltage levels represent the mirror positions. The mirror positions are sent to the memory seat module through the serial data circuit where they are stored for memory mirror operation. When the memory seat module receives a memory recall command, the memory seat module will send the go to position commands to the outside mirror switch and passenger window switch. The switches will then drive the appropriate mirror motors to the commanded position sensor settings.

## Heated Mirrors

The heated mirrors are controlled through the rear defog relay. Whenever the rear window defogger is turned on battery voltage is supplied to the mirror heater elements through the left and right mirror heater element control circuits.

# Outside Mirror Description and Operation (Without A45)

## Power Mirror System Components

The power mirror system consists of the following components:

- Mirror direction switch — Controls the left, right, up and down movements of the mirrors
- Mirror select switch — Allows the operator to select the mirror to be moved
- Left outside mirror — Contains both the horizontal and vertical mirror motors
- Right outside mirror — Contains both the horizontal and vertical mirror motors

Each of the outside power mirrors contains 2 motors. The up-down motor operates the vertical directions and the left-right motor operates the horizontal directions. Each of the power mirror motors are internally circuit breaker protected.

## Power Mirros Without A45 Block Diagram

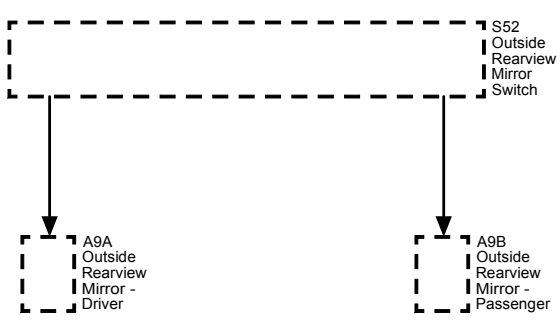


## Power Mirror System Controls

The outside mirror switch incorporates a mirror select switch and a 4 position mirror direction switch.

The mirror select switch allows the driver to select the mirror to be moved by turning the switch to L position enabling the left outside mirror or turning the switch to R position enabling the right outside mirror.

The mirror direction switch is a 4 position switch that allows the operator to move the selected mirror up, down, left or right.

## Power Mirror System Operation

The outside mirror switch receives power through the battery positive voltage circuit from the underhood fuse block. The outside mirror switch also receives a constant ground.

The 4 positions of the direction switch have multiple switch contacts. When not in use, the directional contacts are isolated from any circuit. Each of the contacts are connected to opposing sides of the appropriate mirror motors through the selector switch. The selector switch interrupts or completes these circuits depending on the position of the selector switch, L or R.

If the mirror select switch is placed in the L position and the up switch is pressed, battery voltage will be supplied to the driver outside mirror vertical motor through the driver mirror motor up control circuit and return to the mirror switch through the driver mirror motor left/down control circuit, then to ground and the mirror will move up. If the down switch is pressed, the driver mirror motor left/down control circuit supplies battery voltage and the driver mirror motor up control circuit completes the path to the mirror switch, then to ground and the mirror will move down.

The remainder of the mirror functions operate in the same manner as described above. Placing the mirror control switch in opposing positions, left/right or up/down, will reverse the voltage polarity to the mirror motor, utilizing the same circuits and the mirror will move accordingly.

## Heated Mirrors

The heated mirrors are controlled through the rear defog relay. Whenever the rear window defogger is turned ON, battery voltage is supplied to the mirror heater elements through the left and right mirror heater element control circuits.

# Vehicle Access

## Schematic and Routing Diagrams

### Door Lock/Indicator Schematics

#### Switches and Indicators (without A31)

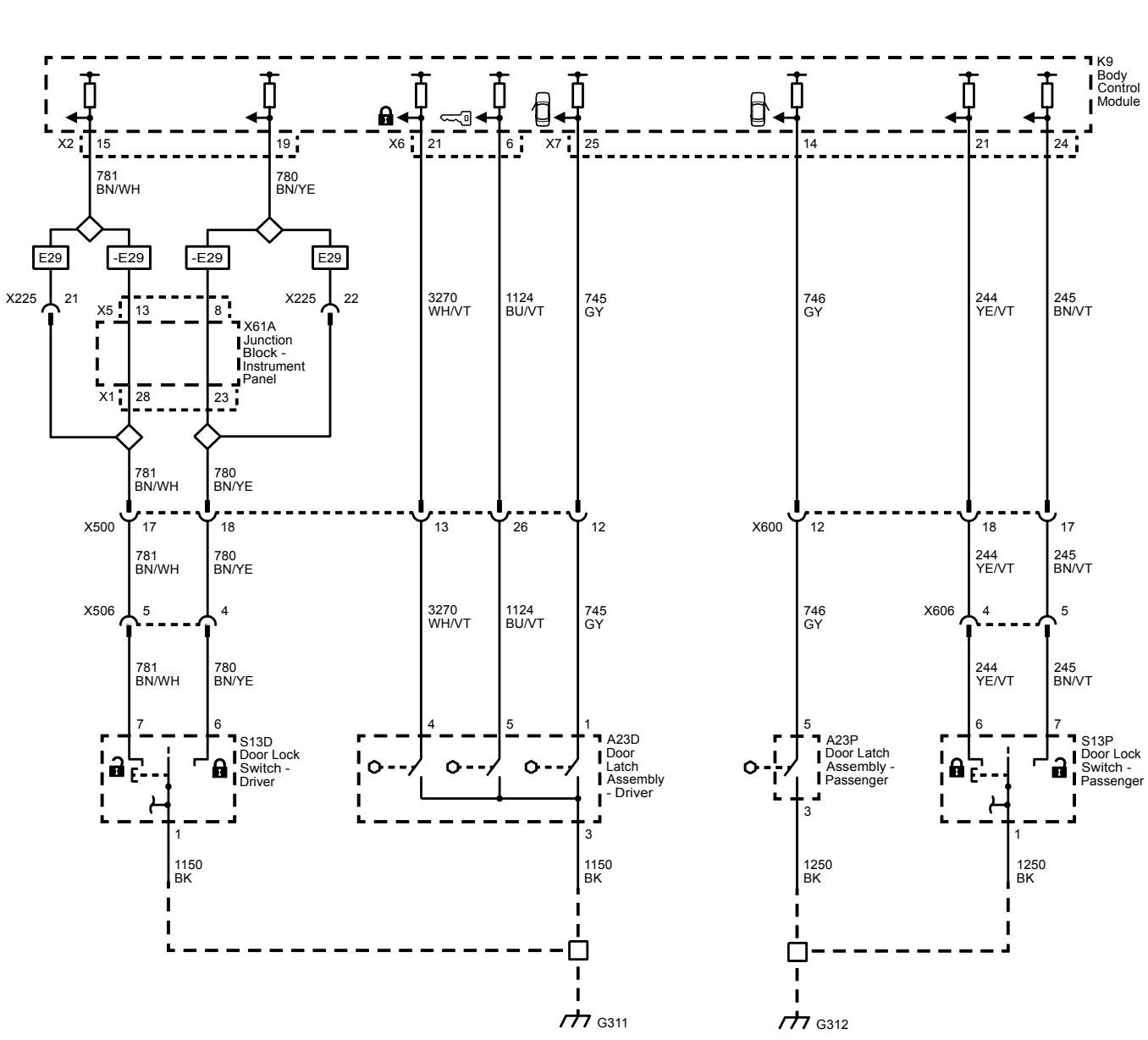

## Switches and Child Lock Status (A31)

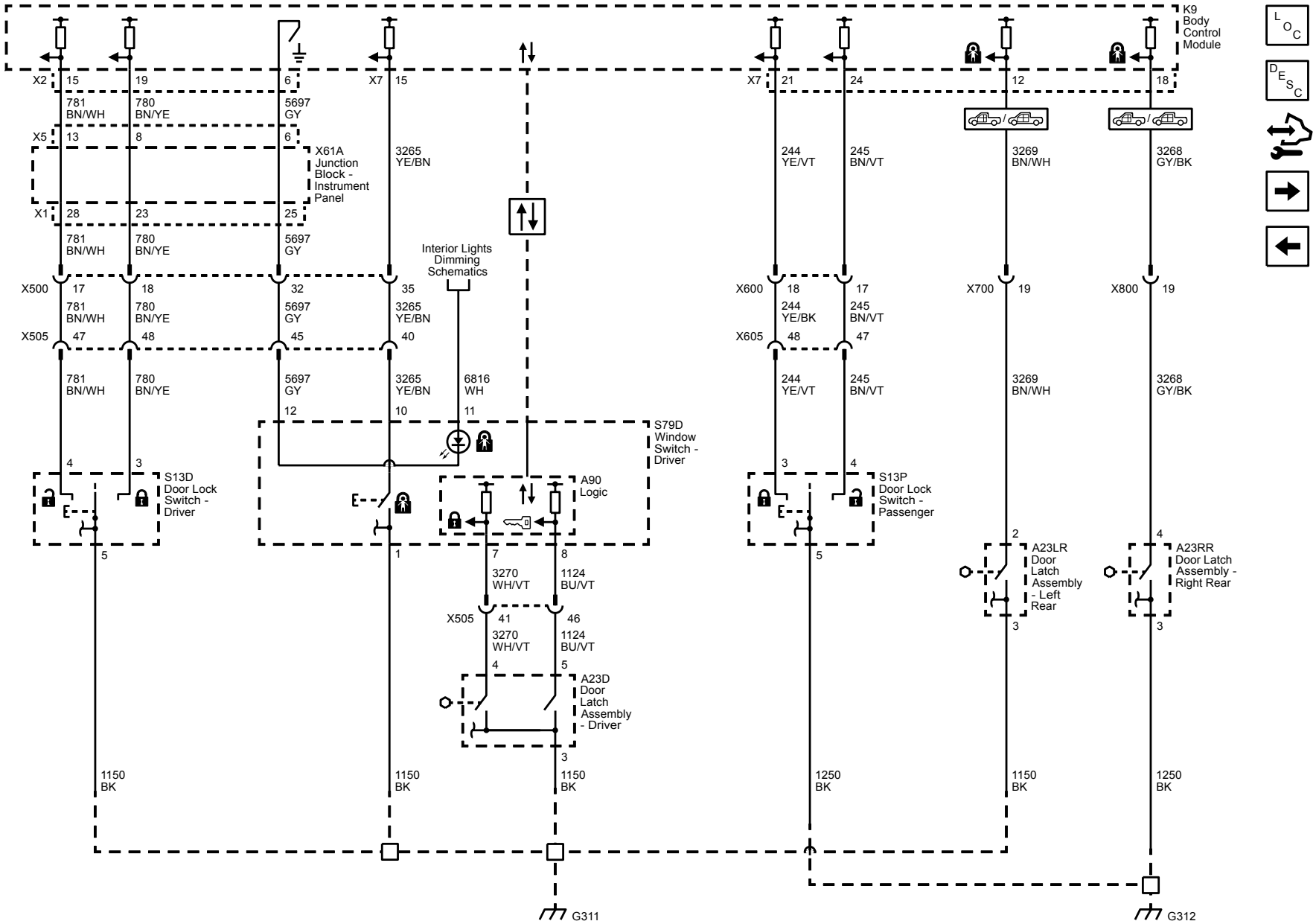

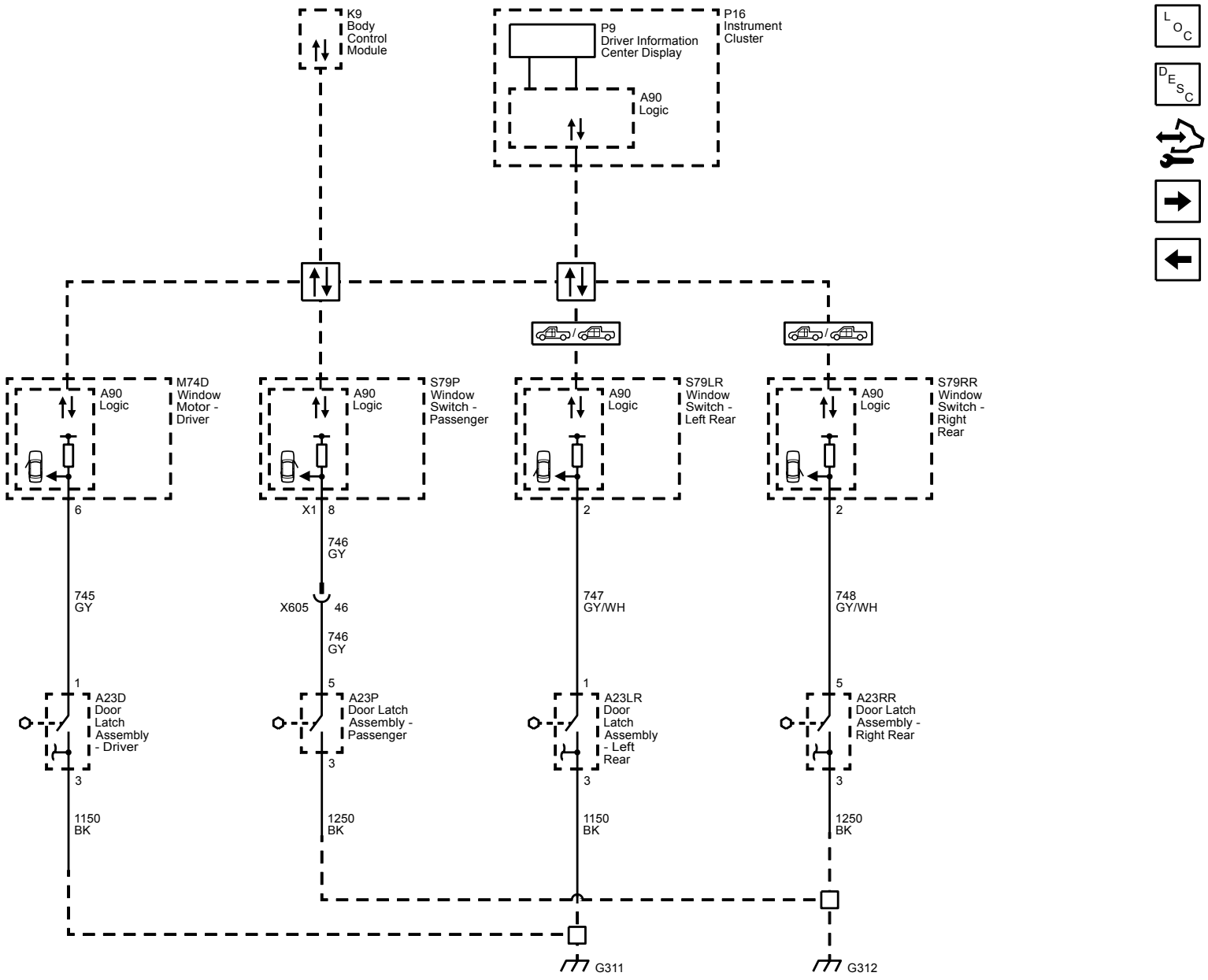
K9
Body Control Module
P16
Instrument Cluster
P9
Driver Information Center Display
A90
Logic
M74D
Window Motor - Driver
S79P
Window Switch - Passenger
S79LR
Window Switch - Left Rear
S79RR
Window Switch - Right Rear
6
X1
8
2
2
746
GY
745
GY
X605
46
747
GY/WH
748
GY/WH
746
GY
1
5
1
5
A23D
Door Latch Assembly - Driver
A23P
Door Latch Assembly - Passenger
A23LR
Door Latch Assembly - Left Rear
A23RR
Door Latch Assembly - Right Rear
3
3
3
3
1150
BK
1250
BK
1150
BK
1250
BK
G311
G312

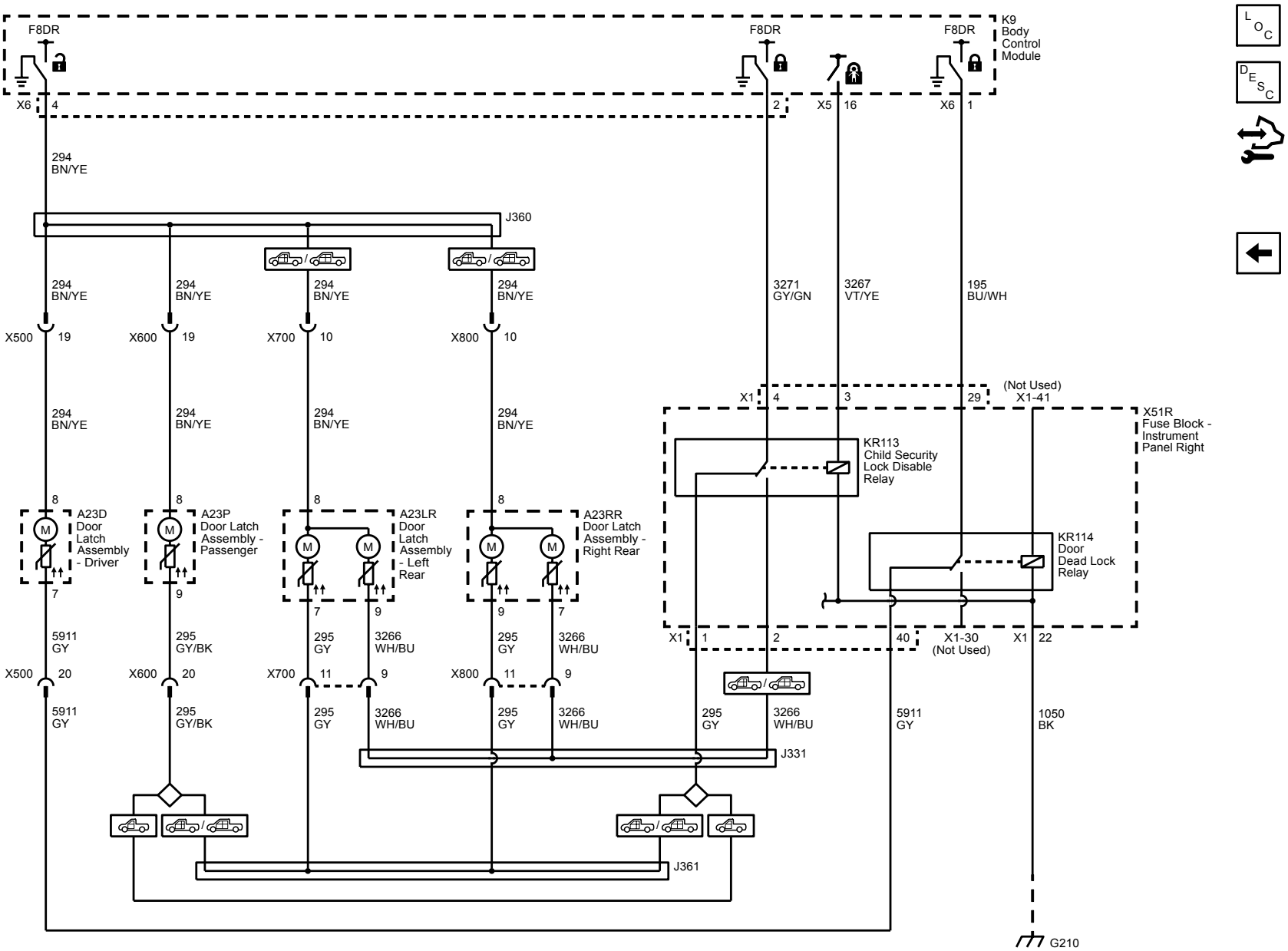
F8DR
F8DR
F8DR
K9
Body
Control
Module
X6
4
2
X5
16
X6
1
294
BN/YE
J360
294
BN/YE
294
BN/YE
294
BN/YE
294
BN/YE
3271
GY/GN
3267
VT/YE
195
BU/WH
X500
19
X600
19
X700
10
X800
10
294
BN/YE
294
BN/YE
294
BN/YE
294
BN/YE
X1
4
3
29
(Not Used)
X1-41
X51R
Fuse Block -
Instrument
Panel Right
KR113
Child Security
Lock Disable
Relay
8
8
8
8
A23D
Door
Latch
Assembly
- Driver
A23P
Door Latch
Assembly -
Passenger
A23LR
Door
Latch
Assembly
- Left
Rear
A23RR
Door Latch
Assembly -
Right Rear
KR114
Door
Dead Lock
Relay
7
9
7
9
9
7
5911
GY
295
GY/BK
295
GY
3266
WH/BU
295
GY
3266
WH/BU
X1
1
2
40
X1-30
(Not Used)
X1
22
X500
20
X600
20
X700
11
9
X800
11
9
5911
GY
295
GY/BK
295
GY
3266
WH/BU
295
GY
3266
WH/BU
295
GY
3266
WH/BU
5911
GY
1050
BK
J331
J361
G210

# Description and Operation

## Door Ajar Indicator Description and Operation

### Door Ajar Indicator System Components

The door ajar indicator system consists of the following components:

- Body control module
- Instrument cluster
- Driver door latch
- Passenger door latch
- Left rear door latch
- Right rear door latch
- Driver window motor (AXG)
- Passenger window switch (AED)
- Left rear window switch ( AEQ)
- Right rear window switch (AEQ)

### Door Ajar System

Depending upon if the vehicle is a standard cab, extended cab or crew cab and/or is equipped with express up/down power windows or standard express down power windows or manual crank windows affects how the driver and passenger door ajar signal circuits are configured and monitored.

#### Door Ajar Indicator With AXG/AED/AEQ Block Diagram

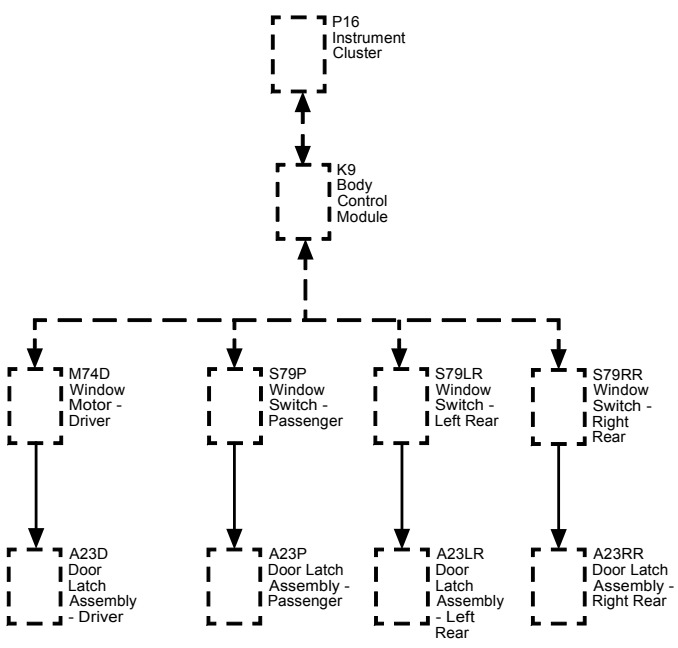


### Driver Door Ajar (With AXG)

The driver window motor will provide a 12V signal to the driver door ajar switch within the door latch to indicate the status of the door. When the driver door is open, the contract within the ajar switch closes providing a ground part for the signal circuit. The driver window motor will detect the voltage drop in the ajar signal circuit and will send a serial data message to the body control module. The body control module will then send a message to the instrument cluster which will illuminate the door ajar icon.

### Passenger and Rear Doors Ajar (With AED and AEQ)

The passenger and rear window switches provide a 12V signal to the respective door ajar switch within the door latch to indicate the status of the door. When the door is open, the contract within the ajar switch closes providing a

ground part for the signal circuit. The window switch will detect the voltage drop in the ajar signal circuit and will send a serial data message to the body control module. The body control module will then send a message to the instrument cluster which will illuminate the door ajar icon.

## Door Ajar Indicator Block Diagram

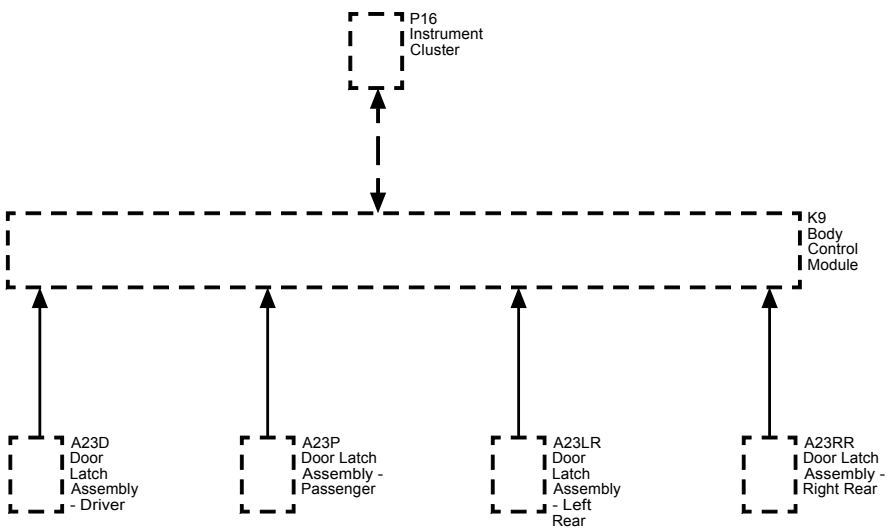


### Driver, Passenger and Rear Doors Ajar (Without AXG, AED or AEQ)

The body control module provides a 12V signal to each door ajar switch within the door latch to indicate the status of the door. When the door is open, the contract within the ajar switch closes providing a ground part for the signal circuit. The body control module will detect the voltage drop in the ajar signal circuit and will send a message to the instrument cluster which will illuminate the door ajar icon

# Power Door Locks Description and Operation

## Door Lock System Components

The power door lock system consists of the following components:

- Driver door lock switch
- Driver door key cylinder switch (Part of the driver door latch assembly)
- Child door lockout switch (Part of the driver window switch)
- Passenger door lock switch
- Front door lock actuators
- Rear door lock actuators (Extended and crew cab models)
- Body control module (BCM)
- Keyless entry control module
- Keyless entry transmitter
- Right instrument panel fuse block (Contains child security lock disable PCB relay)

## Power Door Locks Block Diagram

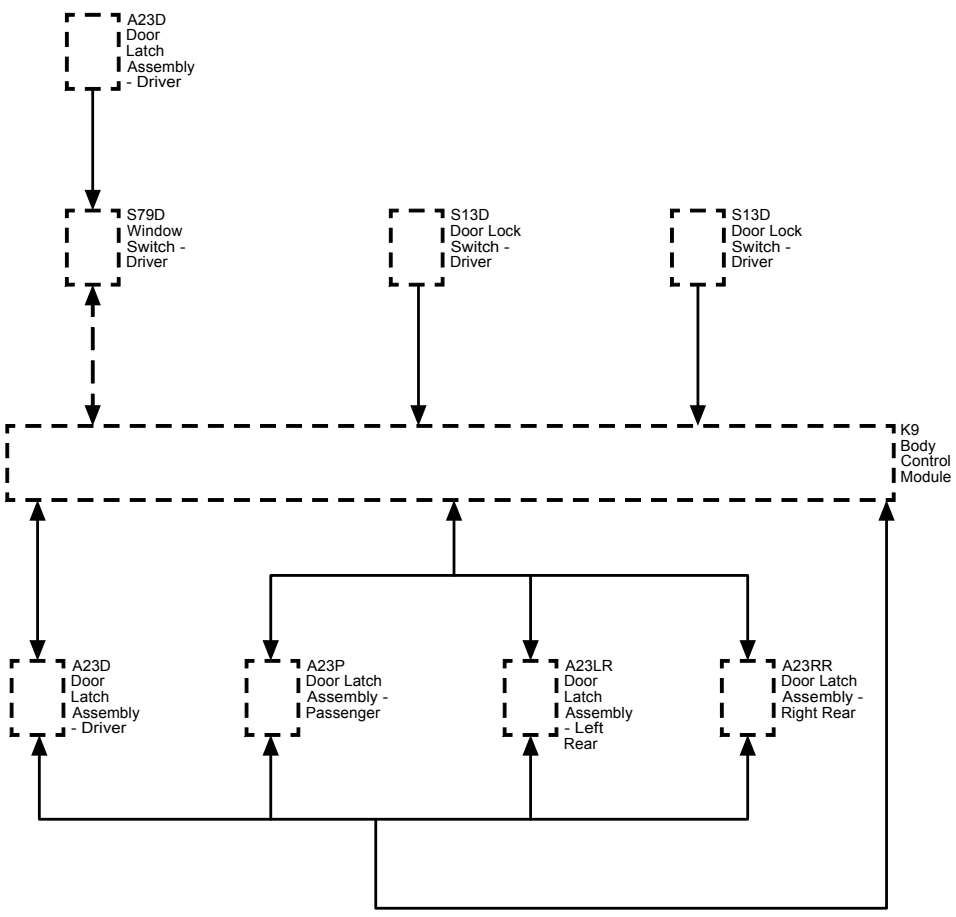


## Door Lock System Controls

The power door lock system can be controlled by any of the following:

- A door lock switch LOCK or UNLOCK activation
- A key cylinder switch unlock activation
- A keyless entry transmitter activation
- Pressing the driver door lock plunger flush with the door panel will lock all doors

### Door Lock Operation

The BCM supplies a 12 volt signal to the lock and unlock signal circuits of the driver and passenger door lock switches. When the appropriate switch is pressed, a contact within the door lock switch closes providing a ground path for the signal circuit. The BCM will detect the voltage drop in the signal and will command the doors to perform the lock or unlock functions.

The driver door latch contains 2 internal switches and 2 signal circuits that are monitored by the BCM. One switch is controlled by the driver key cylinder switch, when the key is turned to the unlock position, a switch will close and the BCM will command the remaining doors to UNLOCK. The other switch is controlled by the driver door lock plunger, pressing the plunger flush with the door panel will close the switch, the switch will close and the BCM will command the remaining doors to LOCK

The BCM may also receive a LOCK or UNLOCK command from the keyless entry control module, refer to CELL Link Error - Link target cell (cell ID 52297) is invalid for this publication. for information on the keyless entry system

The BCM, upon receipt of a lock switch lock or unlock signal, will supply voltage to the door lock actuator lock or unlock control circuits. Since the opposite side of the lock actuator is connected to ground through the other lock actuator control circuit, the doors will then lock or unlock as commanded.

The following three circuits are used to operate the lock:

- Driver door unlock
- Passenger doors unlock
- All doors lock

## Power Door Child Lock Block Diagram

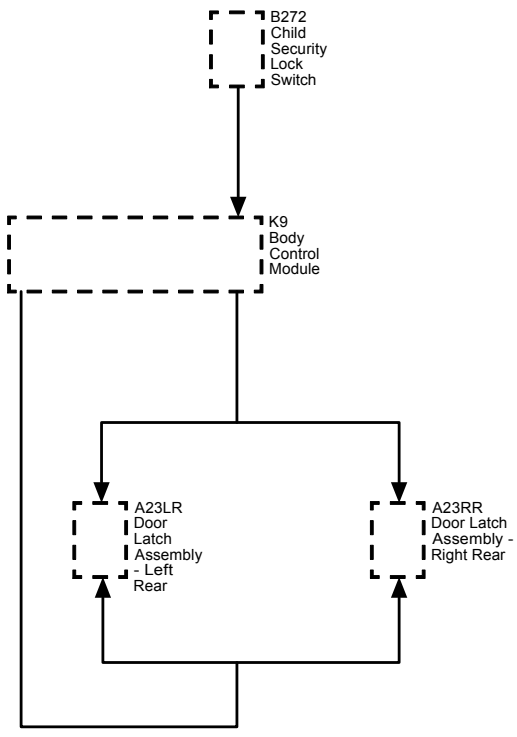


### Child Security Lockout Operation

The child door lockout switch (part of the driver window switch) controls the child lockout functions on the rear doors. The lockout switch is an input to the BCM and the BCM controls the child security lock disable PCB relay. When the BCM receives a command from the child door lockout switch, it will apply voltage to the relay coil, this will energize the relay and the contact within the relay will then direct the voltage to activate the left rear and right rear child locks and then isolate them from the normal door lock system to prevent the rear doors from being opened by using the interior rear door handles. An indicator will also illuminate to alert the driver that the child lockout system has been activated. Pushing the switch again will return normal function to the rear interior door handles and the indicator will go out.

If the lockout indicator flashes while commanding the lockout system, indicates that the BCM has detected a fault in the system and that one or both interior rear door handles may not be locked out.

# Wipers and Washers

## Schematic and Routing Diagrams

### Wiper/Washer Schematics

#### Controls

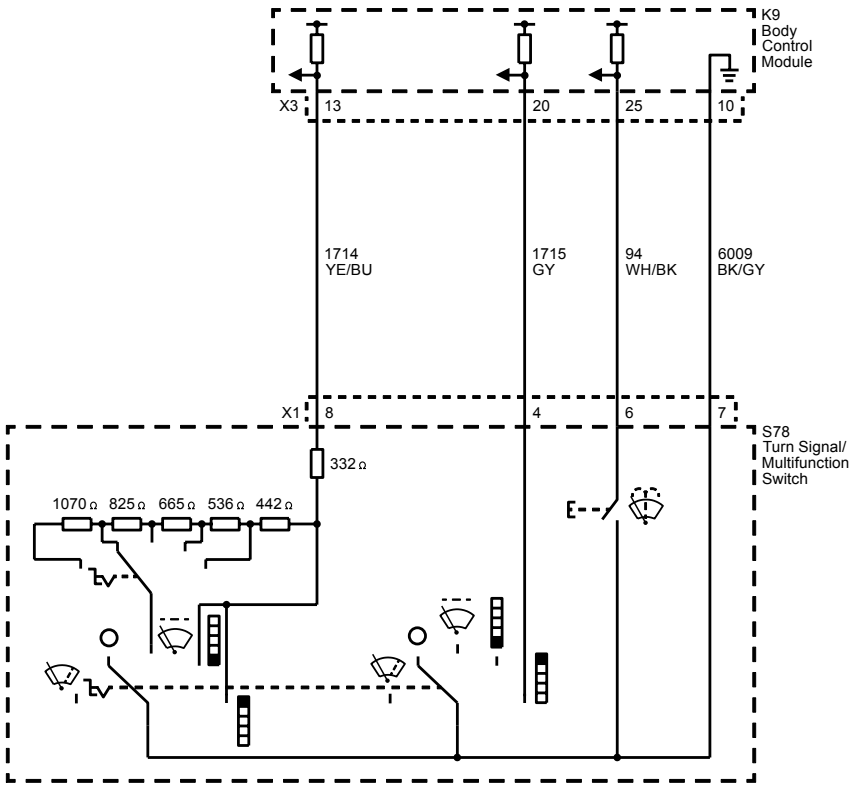

## Wiper Motor and Washer Pump

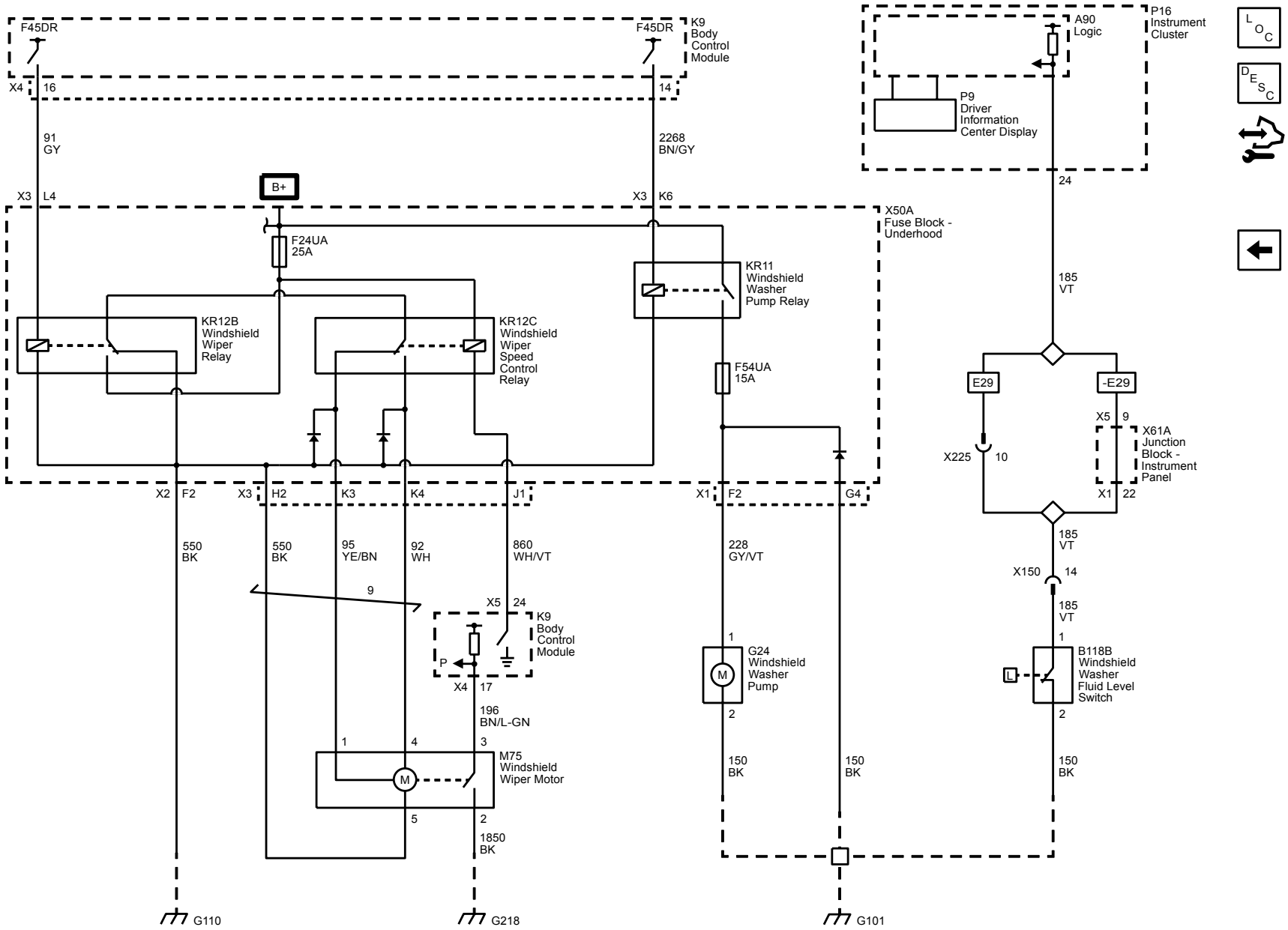

# Antilock Brake System - Non-Hybrid Less than 3900 kg (8600 lb) GVW

## Schematic and Routing Diagrams

### Antilock Brake System Schematics

#### Power, Ground, Serial Data and Traction Controls

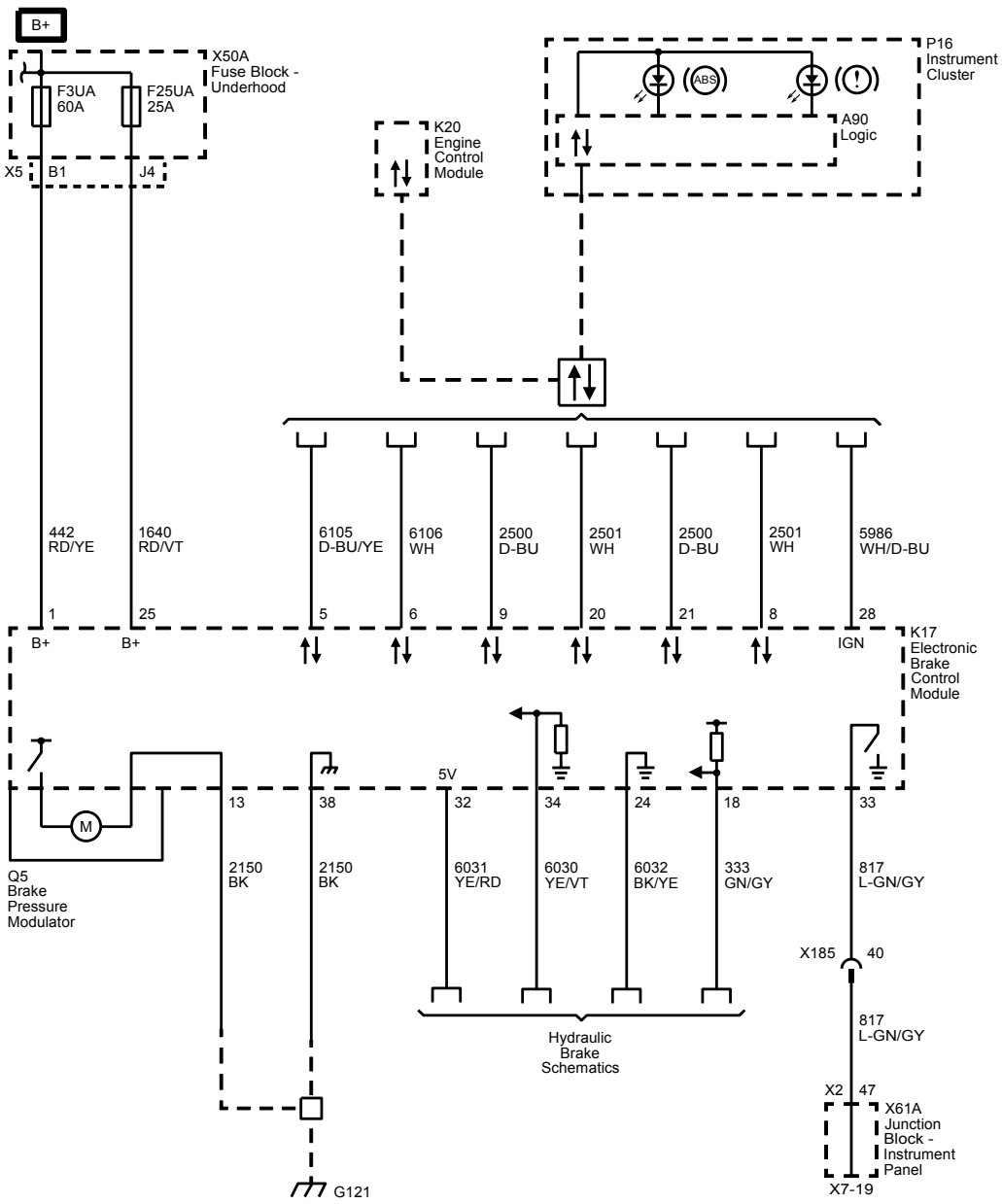

## Wheel Speed Signals

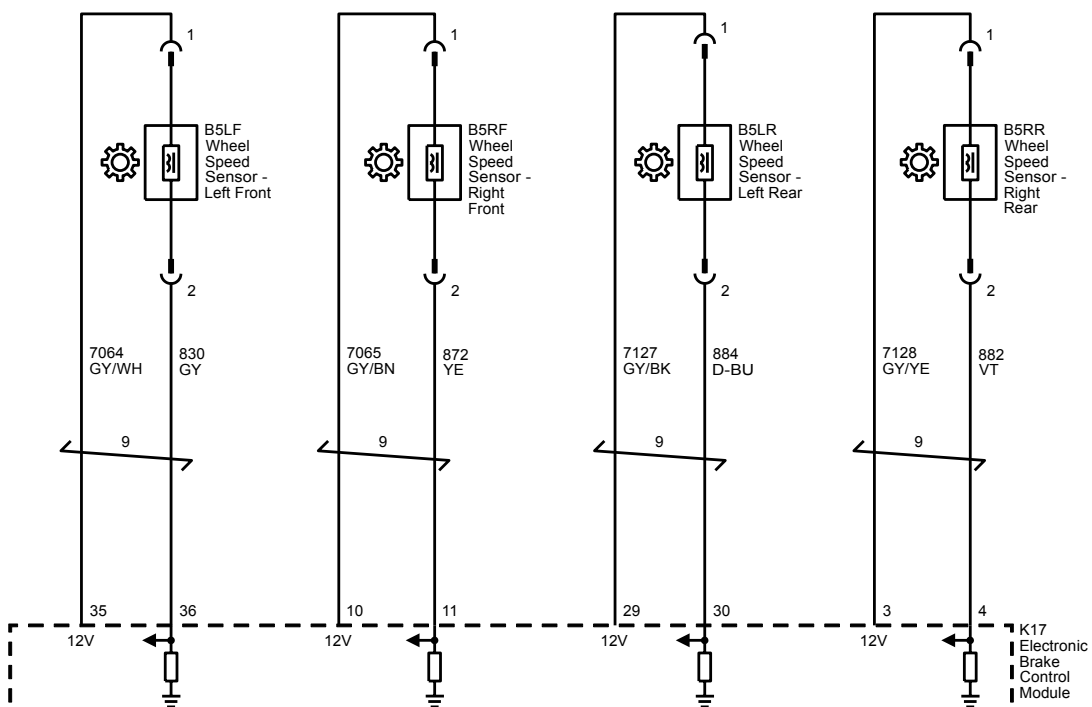

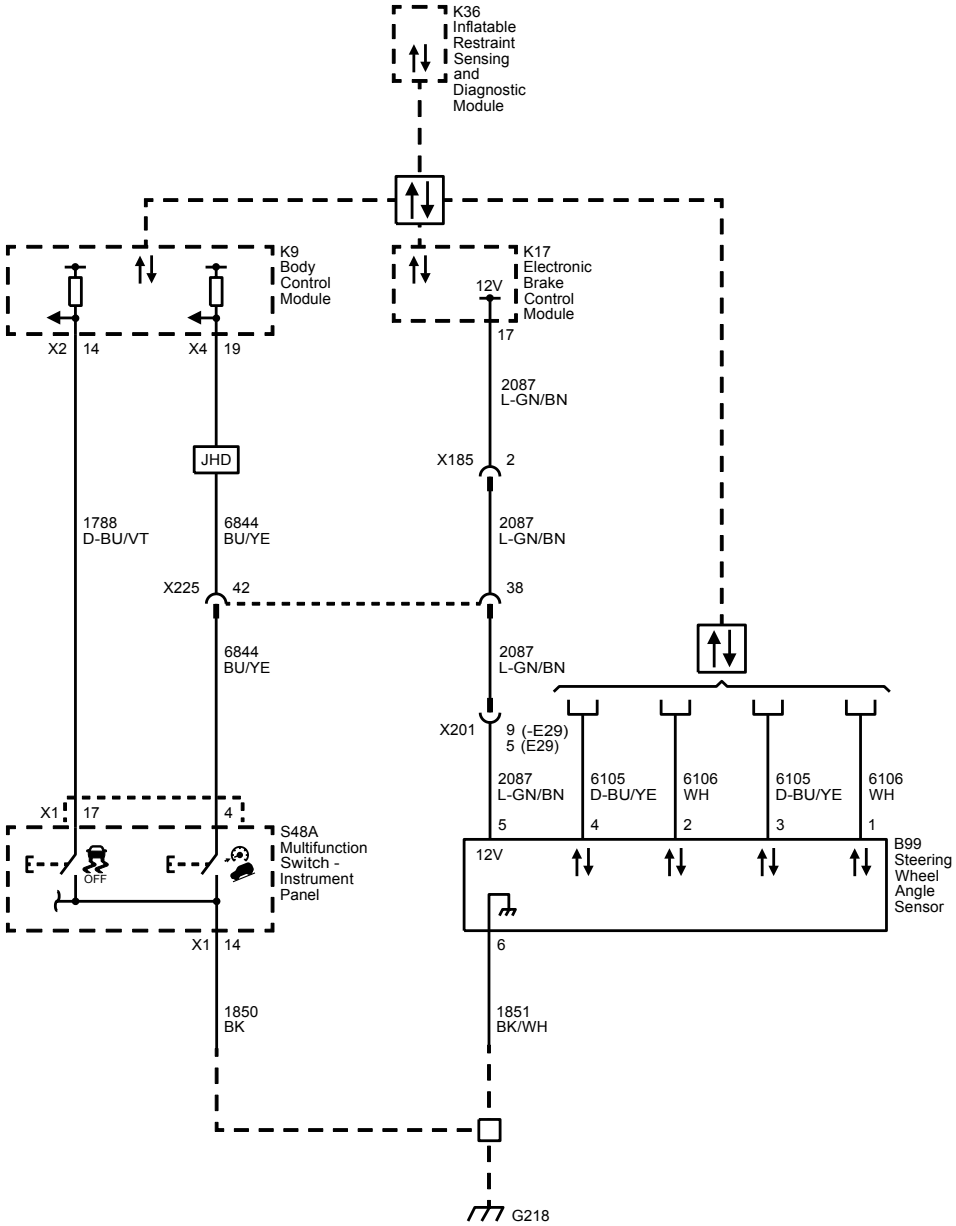
K36
Inflatable
Restraint
Sensing
and
Diagnostic
Module
K9
Body
Control
Module
K17
Electronic
Brake
Control
Module
12V
X2 14
X4 19
17
2087
L-GN/BN
JHD
X185 2
1788
D-BU/VT
6844
BU/YE
2087
L-GN/BN
X225 42
38
6844
BU/YE
2087
L-GN/BN
X201
9 (-E29)
5 (E29)
2087
L-GN/BN
6105
D-BU/YE
6106
WH
6105
D-BU/YE
6106
WH
5
4
2
3
1
X1 17
4
S48A
Multifunction
Switch -
Instrument
Panel
OFF
12V
B99
Steering
Wheel
Angle
Sensor
X1 14
6
1850
BK
1851
BK/WH
G218

# Trailer Brake Controls

## Schematic and Routing Diagrams

### Trailer Brake Control Schematics

#### Trailer Brake (JL1)

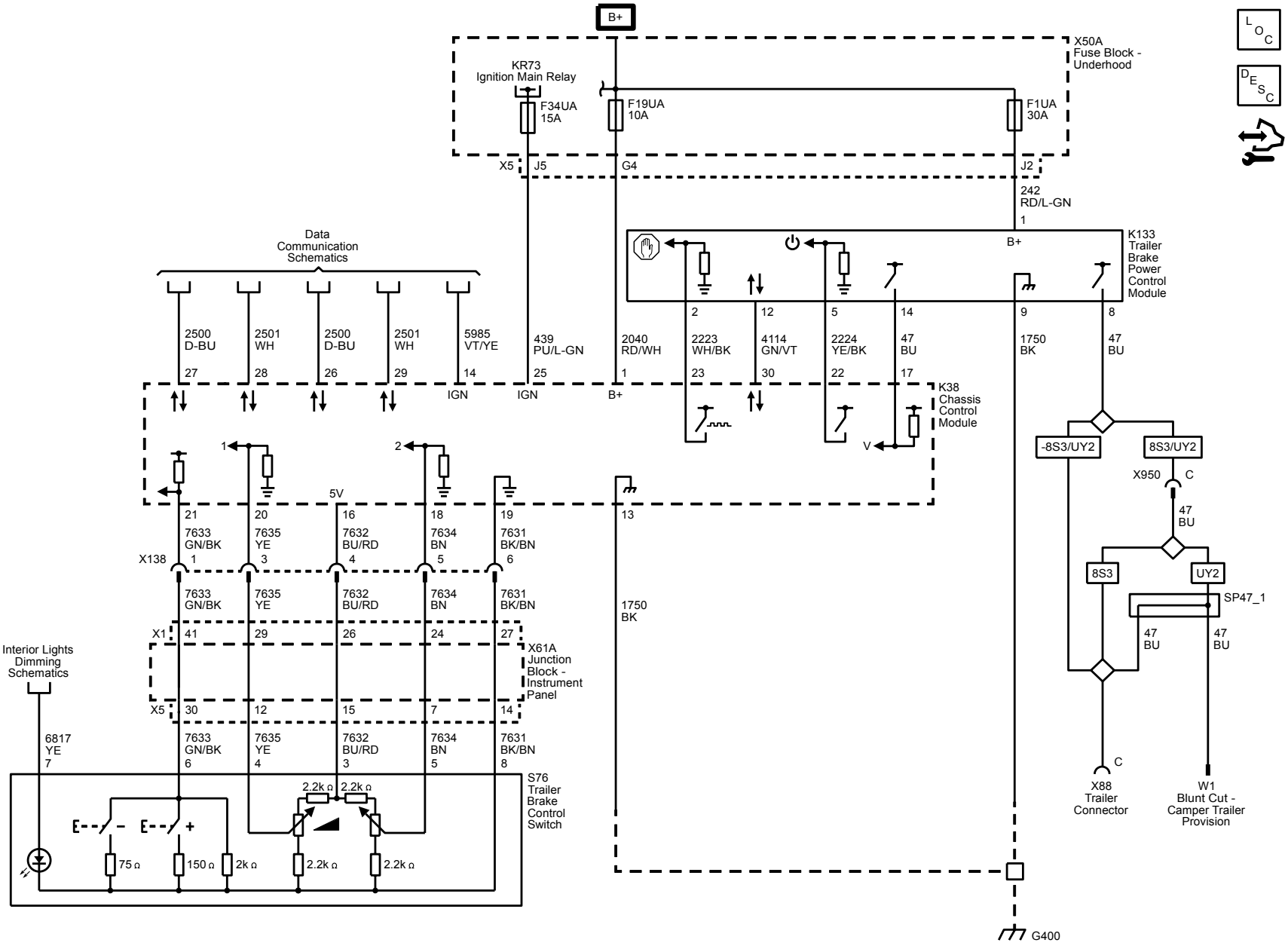

# Description and Operation

## Trailer Brake Controls Description and Operation

A trailer brake control system is used to control the amount of trailer braking power that is made available to trailers with brakes that require a controlled electrical output signal for actuation.

The power output to the trailer brakes is based on both the amount of braking being applied by the vehicle's brake system and on the type of trailer brakes detected.

### The Trailer Brake Control System is compatible with two types of Trailer Brake Systems as listed below:

1. **Electric Brakes** A controlled electrical output signal energizes an electric-magnet/lever arm assembly that directly actuates the brake mechanism. The GDS name for this system is "Electromagnetic Brakes".
2. **Electric Over Hydraulic Brakes** A controlled electrical output signal energizes a remote, trailer mounted hydraulic pump to build brake pressure in a closed hydraulic system on the trailer. The hydraulic fluid pressure actuates the brake mechanism. The GDS name for this system is "Electrohydraulic Brakes".

### Trailer Brake Output Versus Trailer Brake Type

- The trailer brake system characterizes the trailer brakes as either Electric Brake or Electric Over Hydraulic Brake automatically. This characterization may be affected by the number, type, and age of the trailer brake magnets, as well as any other devices installed on the trailer brakes (i.e. adapters for Electric Over Hydraulic brake functionality).
- The trailer brake system is fully operational with either characterization.
- Some features of the trailer brake system may be different based on the trailer brake type characterization. An example of this is at zero speed, where pressing the service brake pedal will produce output when the trailer brakes are characterized as Electric Brakes, but not when characterized as Electric Over Hydraulic Brakes.
- Sliding the manual trailer brake apply lever will produce output at zero speed for either characterization.

The user gain allows the driver to adjust the amount of trailer brake output to match the trailer load and road surface. The controller determines the desired trailer brake output and provides a control signal to the K133 Trailer Brake Power Control Module. The K133 Trailer Brake Power Control Module amplifies the signal and provides the output required to activate the Electric or Electric Over Hydraulic trailer brakes.

The trailer brake control can support up to a maximum of four axles with electric trailer brakes (8 brake magnets).

Connecting a trailer that is not compatible with the trailer brake system may result in reduced or complete loss of trailer braking. There may be an increase in stopping distance or trailer instability which could result in personal injury or damage to the vehicle, trailer or other property. An aftermarket controller may be available for use with trailers with surge or air trailer brake systems.

To determine the type of brakes on your trailer and the availability of controllers, check with your trailer manufacturer or dealer. Do not power up an aftermarket controller with the factory brake controller at the same time.

### The vehicle is equipped with the following trailer braking components:

- K38 Chassis Control Module
- K133 Trailer Brake Power Control Module
- S76 Trailer Brake Control Panel
- Manual Trailer Brake Apply
- Trailer Gain Adjustment
- Trailer Brake Driver Information Center Display

### Chassis Control Module

The K38 Chassis Control Module (CCM) is a serviceable GMLAN module. The chassis control module sends the low power commanded duty cycle signal to the trailer brake power control module. The trailer brake power control module amplifies the signal and provides an output that is required to drive the trailer brakes.

### Trailer Brake Power Control Module

The K133 Trailer Brake Power Control Module (TBPM) is a solid state power switching module that supplies power to the trailer brakes at the input command duty cycle. Diagnostic messages are sent from the TBPM to the CCM on a dedicated LIN bus.

### Trailer Brake Control Panel

The S76 Trailer Brake Control Panel contains the trailer gain and manual apply switches. It is located on the instrument panel to the left of the steering column. Refer to the instrument panel overview for more information on the location. The control panel and switches allows you to adjust the amount of output, referred to as trailer gain, available to the Electric or Electric Over Hydraulic brakes. It also allows you to manually apply the trailer brakes. The trailer brake control panel and switches are used along with the trailer brake display page on the driver information center to adjust and display power output to the trailer brakes.

### Manual Trailer Brake Apply

The manual trailer brake apply lever is located on the S76 Trailer Brake Control Panel and is used to apply the trailer's Electric or Electric Over Hydraulic brakes independent of the vehicle's brakes. This lever is used in the trailer gain adjustment procedure to properly adjust the power output to the trailer brakes.

Sliding the lever to the left will apply only the trailer brakes. The power output to the trailer is indicated in the trailer brake display page in the Driver Information Center (DIC). If the vehicle's service brakes are applied while using the manual trailer brake apply lever, the trailer output power will be the greater of the two.

The trailer and the vehicle's brake lamps will come on when either the vehicle's braking or manual trailer brakes are applied.

### Trailer Gain Adjustment

Trailer gain should be set for a specific trailering condition and must be adjusted any time vehicle loading, trailer loading or road surface conditions change. It is important to re-adjust trailer gain any time the tow vehicle, trailer loading or road surface conditions change or it you notice trailer wheel lock-up at any time while you are towing.

Setting the trailer gain properly is needed for the best trailer stopping performance. A trailer that is over-gained may result in locked trailer brakes. A trailer that is under-gained may result in not enough trailer braking. Both of these conditions may result in poor stopping and stability of the vehicle and trailer.

### Trailer Gain Adjustment Procedure

- Adjust trailer gain in 0.5 step increments up to 10 gain setting by using the gain adjustment +/− buttons on the trailer brake control panel switch. Pressing and holding a gain button will cause the trailer gain to continuously increment or decrement. To turn the output to the trailer off, set the gain to zero.
- Drive the tow vehicle and trailer combination on a level surface representative of the towing condition and free of traffic at approximately 32–40 km/h (20–25 mph) and fully apply the manual trailer brake apply lever mechanism located on the trailer brake control panel switch. Adjusting the trailer gain at slower speeds may result in an incorrect gain setting.
- Adjust the trailer gain to just below the threshold of trailer wheel lock-up . Trailer wheel lock-up may not occur if towing a heavily loaded trailer. In this case, adjust the trailer gain to the highest allowable setting for the towing condition.

## Hill Start Assist

The hill start assist allows the driver to launch the vehicle without a roll back when the driver is moving their foot from the brake pedal to the accelerator pedal. Refer to the hill start assist system in the anti-lock brake system description and operation document for more information.

## Trailer Sway Control

The trailer sway control can detect the vehicle yaw instability, caused by an attached trailer. Refer to the trailer sway control system in the anti-lock brake system description and operation document for more information.

## Driver Information Center Indicators and Messages

The following indicators are used to inform the driver of several different conditions:

### Trailer Connected

This message will be briefly displayed when a trailer with Electric or Electric Over Hydraulic brakes is first connected to the vehicle. This message will automatically turn off in about ten seconds. The driver can also acknowledge this message before it automatically turns off.

### Check Trailer Wiring

This message will be displayed if:

- The system detects that a trailer with Electric or Electric Over Hydraulic brakes is connected to the vehicle and then the trailer harness becomes disconnected from the vehicle.
- The trailer connection is recognized initially and then a disconnect occurs while the vehicle is stationary. This message will automatically turn off in about thirty seconds. This message will also turn off if the driver acknowledges this message off or if the trailer harness is reconnected.
- A disconnect of the trailer wiring harness occurs while the vehicle is moving. The Check Trailer Wiring message will continue until the ignition is turned off. The message will also turn off if the driver acknowledges this message off or it the trailer harness is re-connected or repairs are completed.
- There is an electrical fault in the wiring to the electric trailer brakes. The Check Trailer Wiring message will continue as long as there is an electrical fault in the trailer wiring. This message will also turn off if the driver acknowledges this message off.
- A poor connection at the 7–way connector may cause the Check Trailer Wiring message. Some aftermarket 7–way trailer side connector adapters or plugs may cause deformation or excessive wear to the vehicle's trailer terminals. It is recommended that you use an OEM or Pollak heavy duty 7–way trailer side connector adapter.

## Service Trailer Brake System

This message will be displayed when there is a problem with the trailer brake control system. The trailer brake system may not be fully functional, or may not be functioning at all. The trailer brake system is designed to provide trailer braking, if possible, even when faults prevent it from being fully functional. This reduced functionality includes:

1. Providing trailer braking when the master cylinder pressure or brake pedal switch are faulted.
2. Providing trailer braking when hill start assist and trailer sway control communication is faulted.
3. Providing trailer braking when certain manual trailer brake apply lever faults are present.

These conditions should be repaired to allow the trailer brake system to be fully functional.

## Trailer Gain and Output Display

This display menu can be accessed by scrolling through the DIC menu, or any time the trailer gain +/− button is depressed, or the manual trailer brake apply lever is actuated. The trailer output is displayed from 0 to full output and indicates the output power provided to the trailer brakes, relative to the gain setting.

After the electrical connection is made to a trailer equipped with electric brakes or electric over hydraulic brakes, the TRAILER CONNECTED message will be displayed momentarily on the DIC. The Trailer Brake Display Page can be selected on the DIC showing TRAILER GAIN and OUTPUT, after all vehicle related service messages are acknowledged by the driver. Depending on which instrument panel cluster is in the vehicle, the DIC may display dashed lines, a greyed out display, or it may be blank signifying a disconnected trailer or a trailer brake fault condition.

# Secondary and Configurable Customer Controls

## Schematic and Routing Diagrams

### Steering Wheel Secondary/Configurable Control Schematics

#### Steering Wheel Radio Controls (UK3)

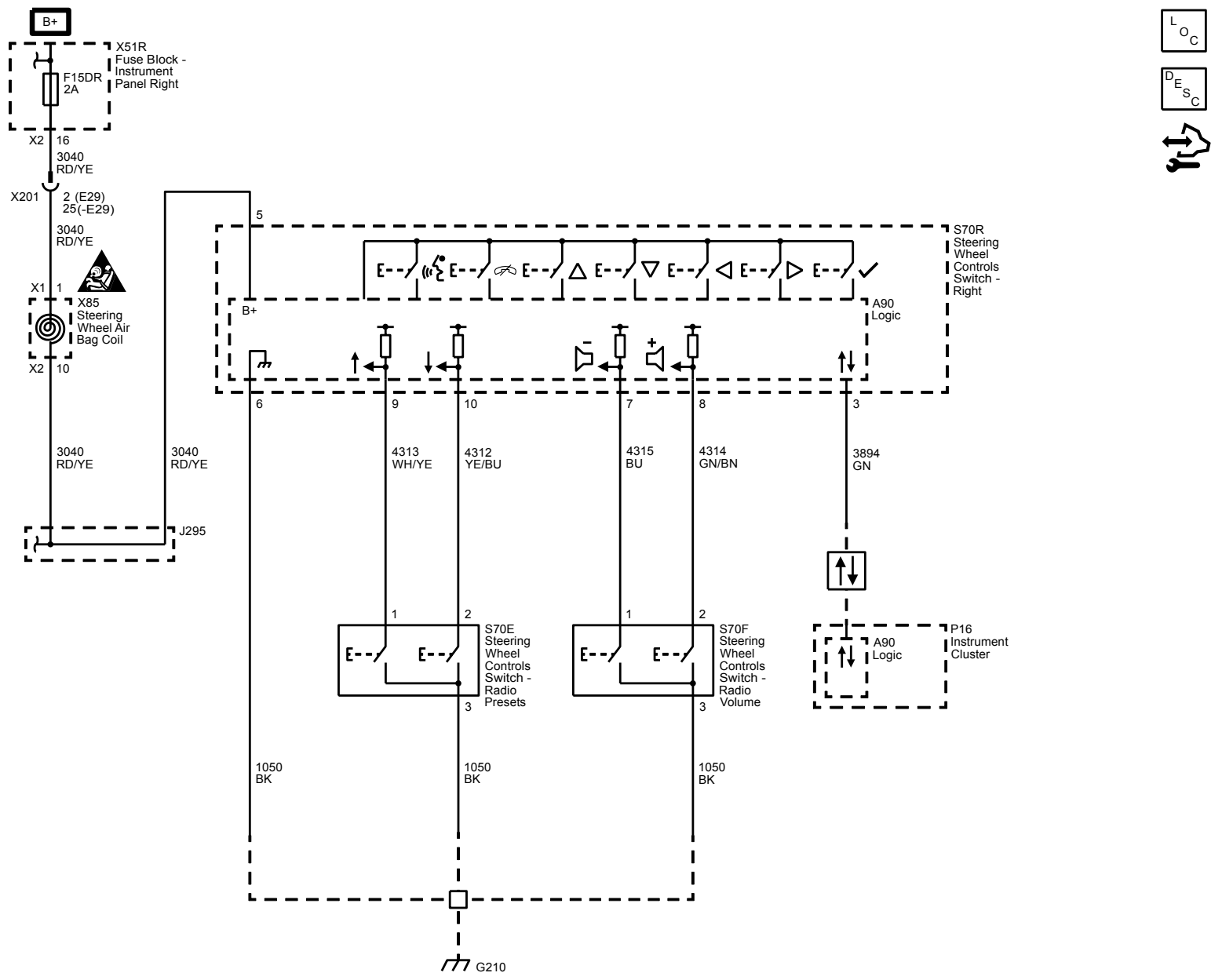

# Description and Operation

## Steering Wheel Controls Description and Operation

### Secondary Controls Block Diagram

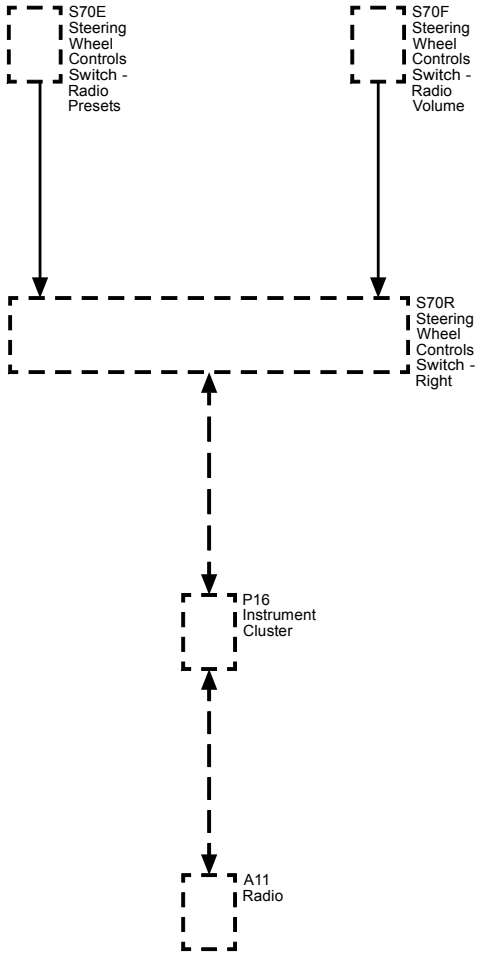


The steering wheel control switches duplicate the function of the primary controls of the associated component, through a network of momentary contact switches.

The Steering Wheel Controls are divided into a right-hand set and left-hand set. The right-hand switch is connected to the IPC LIN serial data and provides input from the left-hand, left-hand rear, and right-hand rear switches

The right-hand switch controller consists of UP/DOWN/LEFT/RIGHT directional, center “select” , Push-to-Talk, and Mute buttons. The LEFT/RIGHT buttons navigate the display regions of the cluster. The UP/DOWN buttons navigate the menus. The right-hand rear switch consists of volume up and volume down buttons. The left-hand rear switch consists of favorite up and favorite down buttons.

# Engine/Propulsion

## 12 V Starting and Charging

### Schematic and Routing Diagrams

#### Starting and Charging Schematics

##### Starting - Manual Transmission (M2P, MQ7 or MXW)

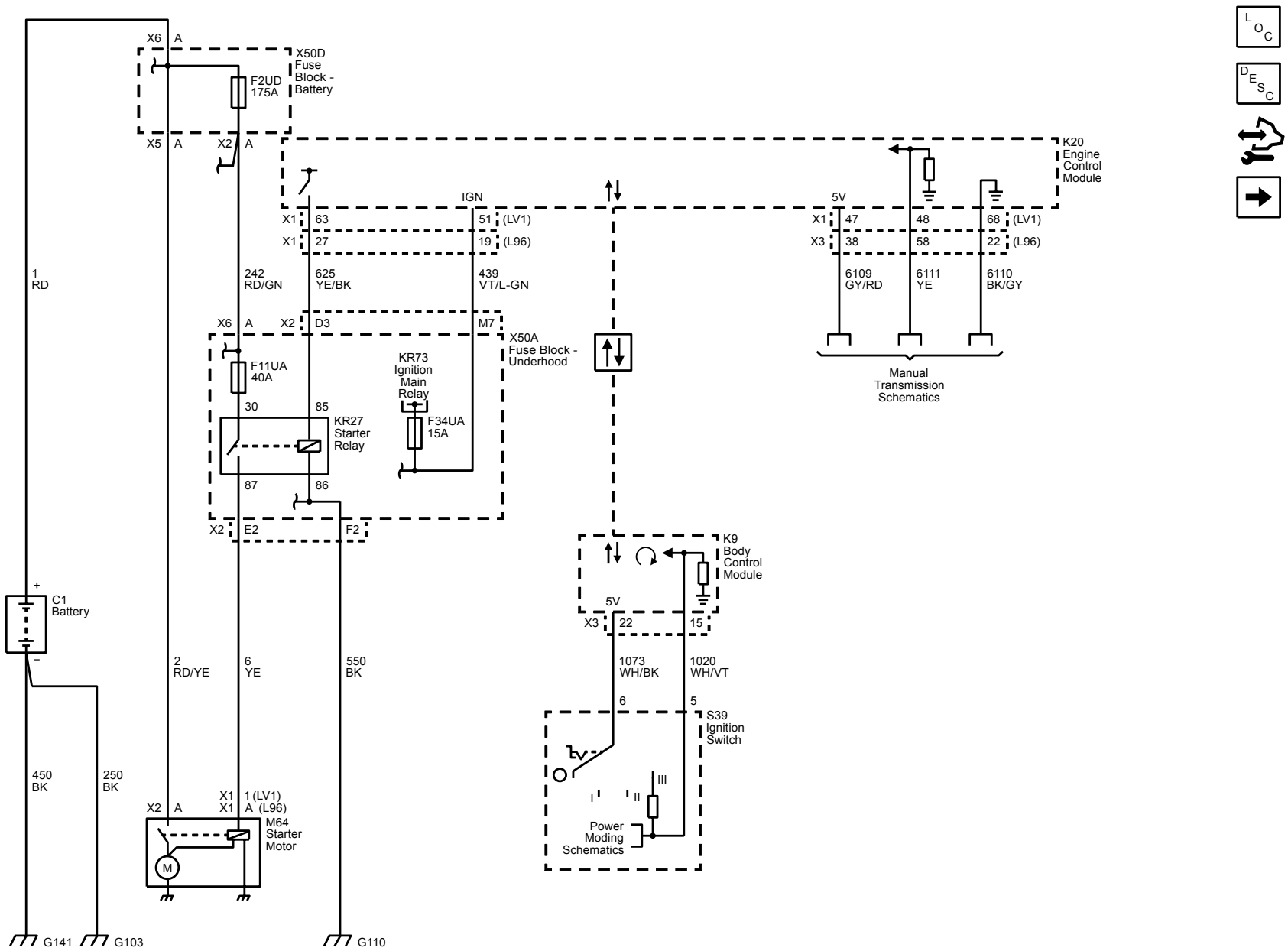

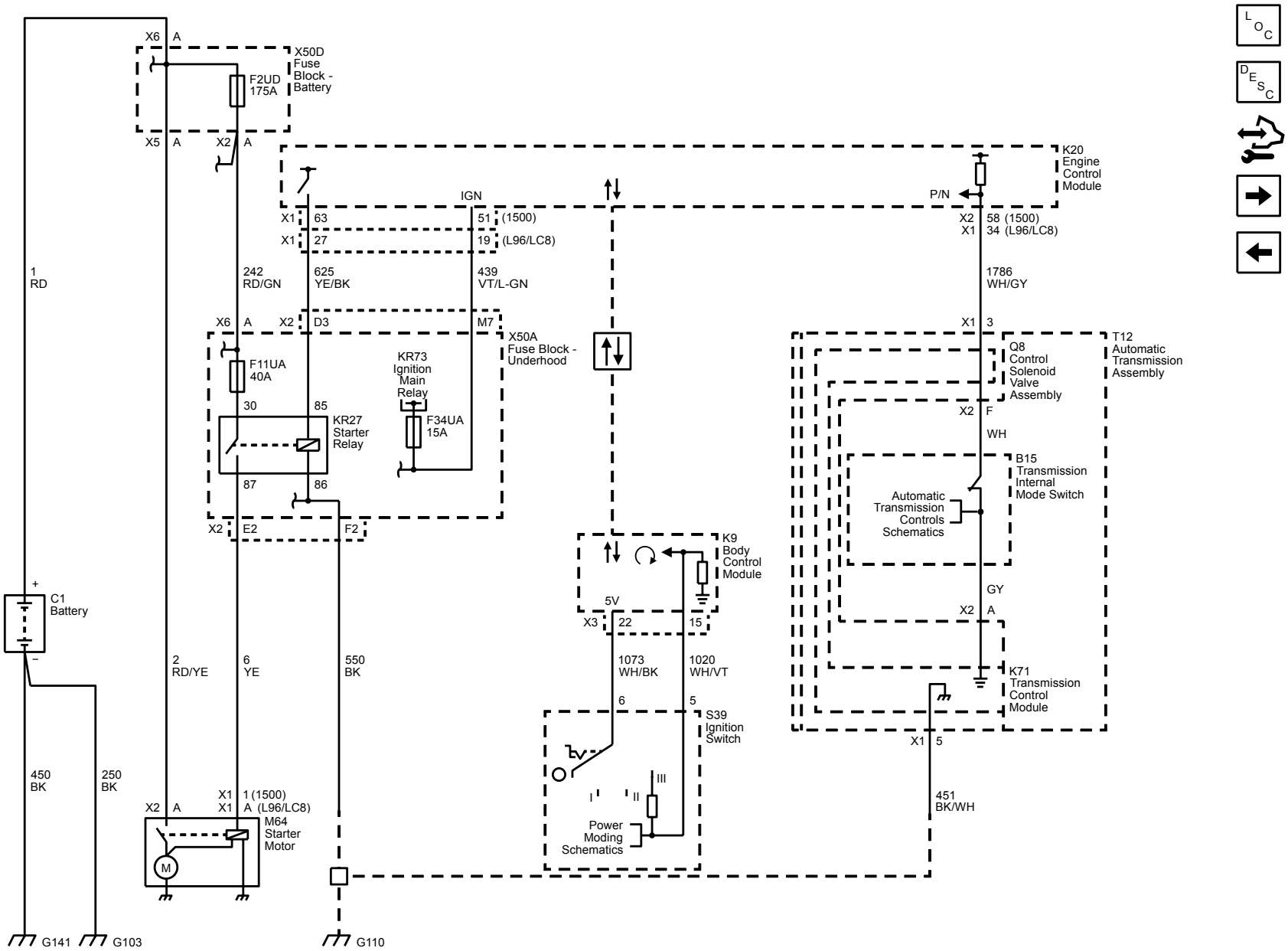
X6 A
X50D Fuse Block - Battery
F2UD 175A
X5 A
X2 A
IGN
K20 Engine Control Module
P/N
X1 63
51 (1500)
X1 27
19 (L96/LC8)
X2 58 (1500)
X1 34 (L96/LC8)
1 RD
242 RD/GN
625 YE/BK
439 VT/L-GN
1786 WH/GY
X6 A
X2 D3
M7
X1 3
X50A Fuse Block - Underhood
F11UA 40A
KR73 Ignition Main Relay
30
85
KR27 Starter Relay
F34UA 15A
87
86
X2 E2
F2
T12 Automatic Transmission Assembly
Q8 Control Solenoid Valve Assembly
X2 F
WH
B15 Transmission Internal Mode Switch
Automatic Transmission Controls Schematics
K9 Body Control Module
5V
X3 22
15
GY
X2 A
K71 Transmission Control Module
1073 WH/BK
1020 WH/VT
6
5
S39 Ignition Switch
X1 5
I
II
III
Power Moding Schematics
451 BK/WH
+
C1 Battery
–
2 RD/YE
6 YE
550 BK
450 BK
250 BK
X1 1 (1500)
X2 A
X1 A (L96/LC8)
M64 Starter Motor
M
G141
G103
G110

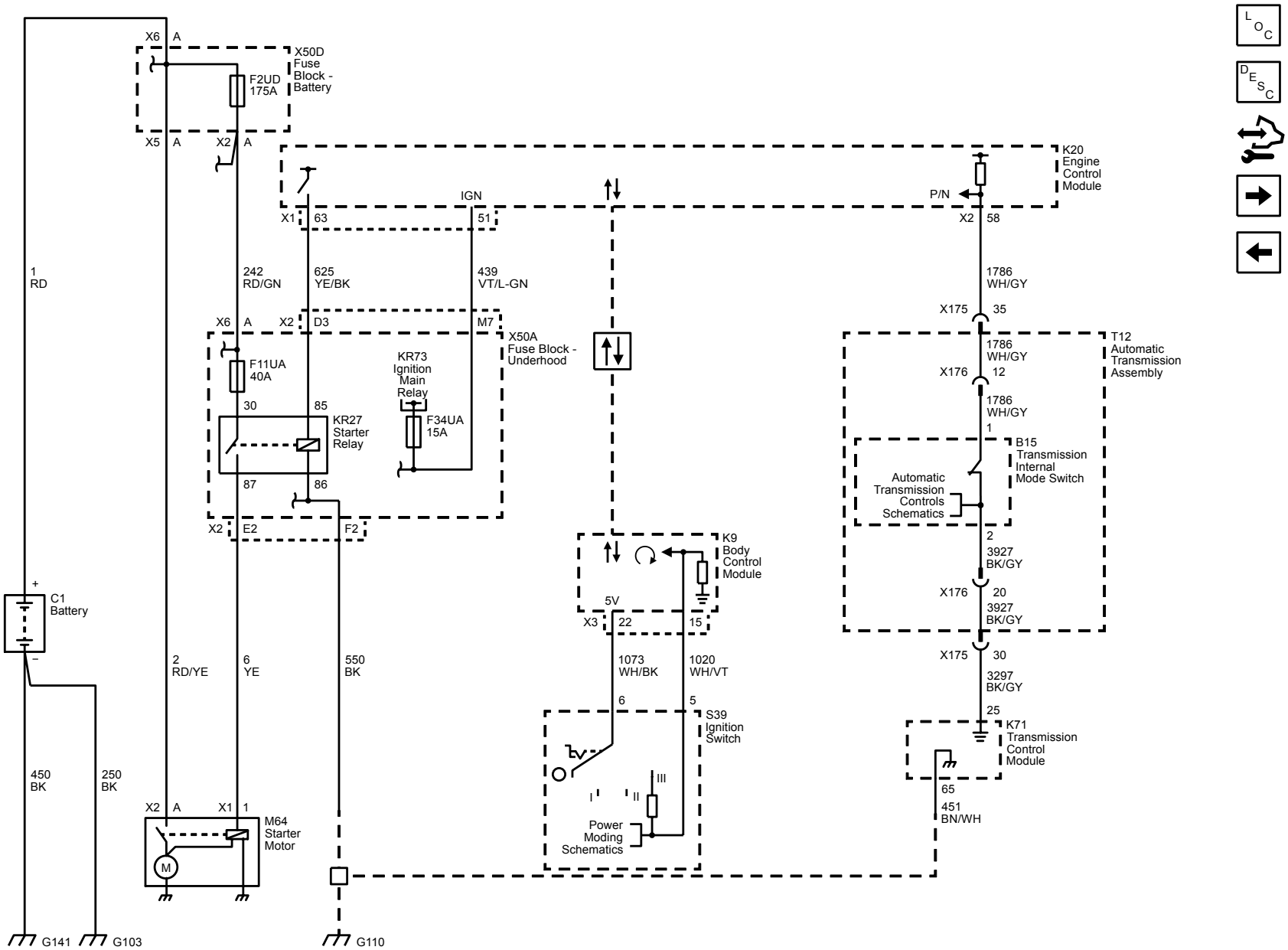
X6 A
X50D Fuse Block - Battery
F2UD 175A
X5 A
X2 A
IGN
X1 63
51
K20 Engine Control Module
P/N
X2 58
1 RD
242 RD/GN
625 YE/BK
439 VT/L-GN
1786 WH/GY
X175 35
X6 A
X2 D3
M7
X50A Fuse Block - Underhood
F11UA 40A
KR73 Ignition Main Relay
30
85
KR27 Starter Relay
F34UA 15A
87
86
X2 E2
F2
1786 WH/GY
X176 12
T12 Automatic Transmission Assembly
1786 WH/GY
1
B15 Transmission Internal Mode Switch
Automatic Transmission Controls Schematics
2
3927 BK/GY
X176 20
3927 BK/GY
X175 30
3297 BK/GY
25
K71 Transmission Control Module
65
451 BN/WH
K9 Body Control Module
5V
X3 22
15
1073 WH/BK
1020 WH/VT
6
5
S39 Ignition Switch
I
II
III
Power Moding Schematics
C1 Battery
+
–
2 RD/YE
6 YE
550 BK
450 BK
250 BK
X2 A
X1 1
M64 Starter Motor
M
G141
G103
G110

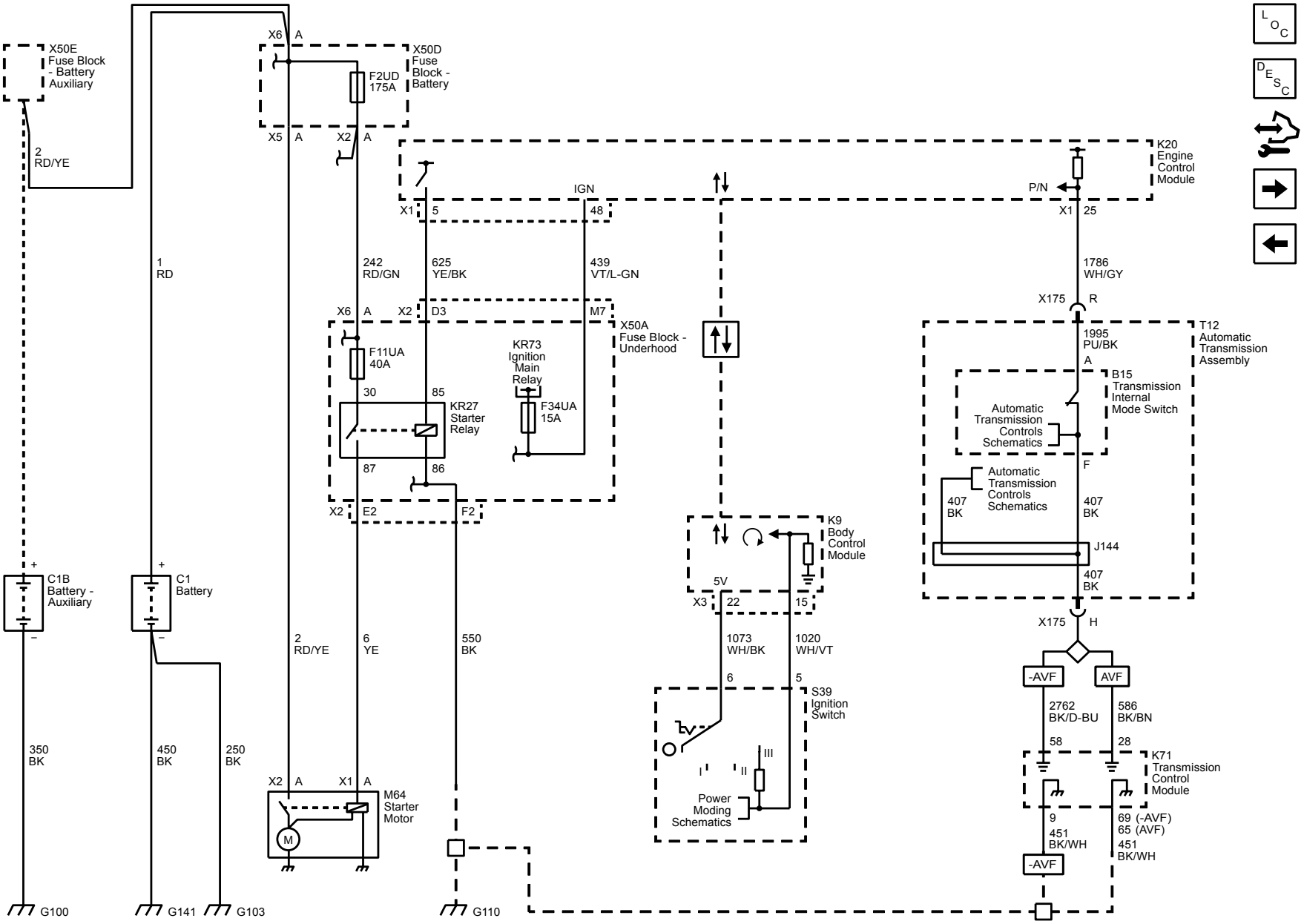
X50E
Fuse Block - Battery Auxiliary
2
RD/YE
X6 A
X5 A
X2 A
F2UD
175A
X50D
Fuse Block - Battery
1
RD
242
RD/GN
625
YE/BK
439
VT/L-GN
IGN
X1 5
48
K20
Engine Control Module
P/N
X1 25
1786
WH/GY
X175 R
X6 A
X2 D3
M7
X50A
Fuse Block - Underhood
F11UA
40A
30
85
KR27
Starter Relay
87
86
KR73
Ignition Main Relay
F34UA
15A
X2 E2
F2
T12
Automatic Transmission Assembly
1995
PU/BK
A
B15
Transmission Internal Mode Switch
Automatic Transmission Controls Schematics
F
407
BK
J144
X175 H
K9
Body Control Module
5V
X3 22
15
1073
WH/BK
1020
WH/VT
6
5
S39
Ignition Switch
I
II
III
Power Moding Schematics
-AVF
AVF
2762
BK/D-BU
586
BK/BN
58
28
K71
Transmission Control Module
9
451
BK/WH
69 (-AVF)
65 (AVF)
C1B
Battery - Auxiliary
C1
Battery
2
RD/YE
6
YE
550
BK
350
BK
450
BK
250
BK
X2 A
X1 A
M64
Starter Motor
M
G100
G141
G103
G110

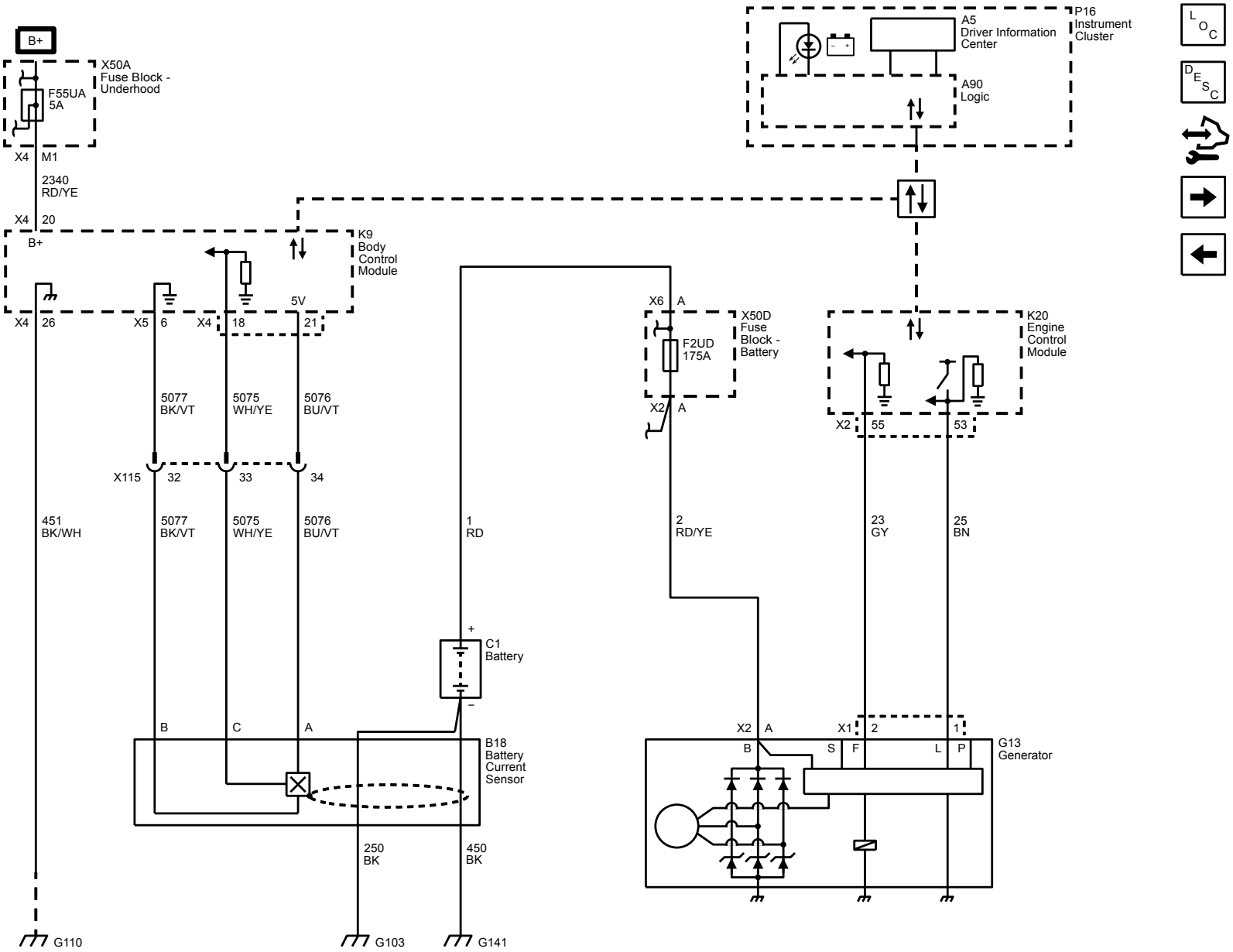
B+
X50A
Fuse Block -
Underhood
F55UA
5A
X4 M1
2340
RD/YE
X4 20
B+
K9
Body
Control
Module
5V
X4 26
X5 6
X4 18
21
5077
BK/VT
5075
WH/YE
5076
BU/VT
X115 32
33
34
451
BK/WH
5077
BK/VT
5075
WH/YE
5076
BU/VT
B
C
A
B18
Battery
Current
Sensor
250
BK
450
BK
G110
G103
G141
1
RD
C1
Battery
+
−
X6 A
X50D
Fuse
Block -
Battery
F2UD
175A
X2 A
2
RD/YE
P16
Instrument
Cluster
A5
Driver Information
Center
A90
Logic
K20
Engine
Control
Module
X2 55
53
23
GY
25
BN
X2 A
X1 2
1
B
S
F
L
P
G13
Generator

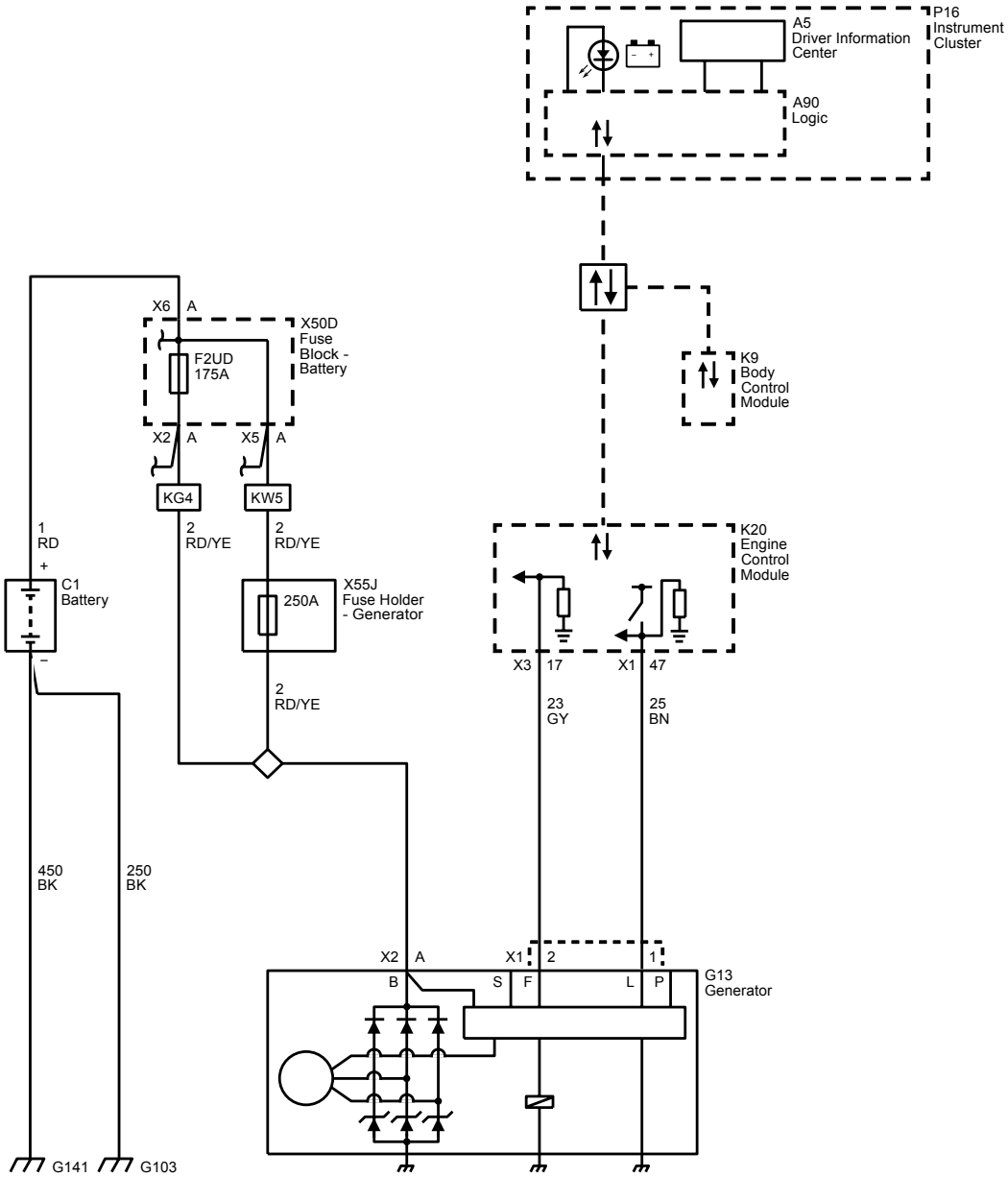
P16
Instrument
Cluster
A5
Driver Information
Center
A90
Logic
K9
Body
Control
Module
K20
Engine
Control
Module
X6
A
X50D
Fuse
Block -
Battery
F2UD
175A
X2
A
X5
A
KG4
KW5
1
RD
+
C1
Battery
–
2
RD/YE
2
RD/YE
X55J
Fuse Holder
- Generator
250A
2
RD/YE
X3
17
X1
47
23
GY
25
BN
450
BK
250
BK
X2
A
X1
2
1
B
S
F
L
P
G13
Generator
G141
G103

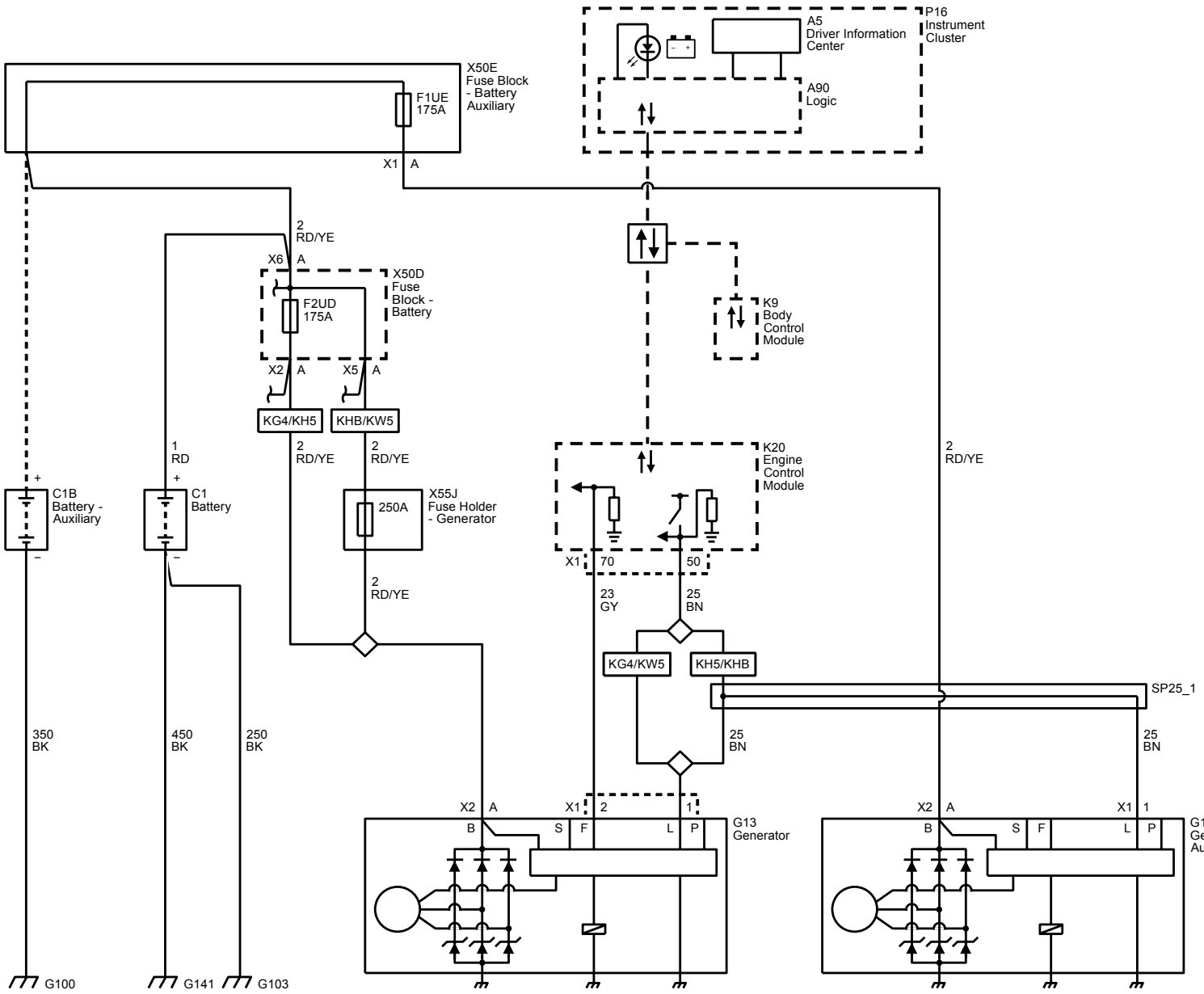
X50E
Fuse Block
- Battery
Auxiliary
F1UE
175A
X1
A
P16
Instrument
Cluster
A5
Driver Information
Center
A90
Logic
2
RD/YE
X6
A
X50D
Fuse
Block -
Battery
F2UD
175A
X2
A
X5
A
K9
Body
Control
Module
KG4/KH5
KHB/KW5
2
RD/YE
2
RD/YE
1
RD
C1B
Battery -
Auxiliary
C1
Battery
250A
X55J
Fuse Holder
- Generator
K20
Engine
Control
Module
2
RD/YE
X1
70
50
23
GY
25
BN
KG4/KW5
KH5/KHB
SP25_1
25
BN
25
BN
350
BK
450
BK
250
BK
G100
G141
G103
X2
A
X1
2
1
B
S
F
L
P
G13
Generator
X2
A
X1
1
B
S
F
L
P
G13E
Generator -
Auxiliary

# Description and Operation

## Charging System Description and Operation

### Electrical Power Management Overview

The electrical power management system is designed to monitor and control the charging system and send diagnostic messages to alert the driver of possible problems with the battery and generator. This electrical power management system primarily utilizes existing on-board computer capability to maximize the effectiveness of the generator, to manage the load, improve battery state-of-charge and life, and minimize the system's impact on fuel economy. The electrical power management system performs 3 functions:

- It monitors the battery voltage and estimates the battery condition.
- It takes corrective actions by boosting idle speeds, and adjusting the regulated voltage.
- It performs diagnostics and driver notification.

The battery condition is estimated during ignition-off and during ignition-on. During ignition-off the state-of-charge of the battery is determined by measuring the open-circuit voltage. The state-of-charge is a function of the acid concentration and the internal resistance of the battery, and is estimated by reading the battery open circuit voltage when the battery has been at rest for several hours.

The state-of-charge can be used as a diagnostic tool to tell the customer or the dealer the condition of the battery. Throughout ignition-on, the algorithm continuously estimates state-of-charge based on adjusted net amp hours, battery capacity, initial state-of-charge, and temperature.

While running, the battery degree of discharge is primarily determined by a battery current sensor, which is integrated to obtain net amp hours.

In addition, the electrical power management function is designed to perform regulated voltage control to improve battery state-of-charge, battery life, and fuel economy. This is accomplished by using knowledge of the battery state-of-charge and temperature to set the charging voltage to an optimum battery voltage level for recharging without detriment to battery life.

The Charging System Description and Operation is divided into 3 sections. The first section describes the charging system components and their integration into the electrical power management. The second section describes charging system operation. The third section describes the instrument panel cluster operation of the charge indicator, driver information center messages, and voltmeter operation.

### Charging System Components

#### Generator

The generator is a serviceable component. If there is a diagnosed failure of the generator it must be replaced as an assembly. The engine drive belt drives the generator. When the rotor is spun it induces an alternating current (AC) into the stator windings. The AC voltage is then sent through a series of diodes for rectification. The rectified voltage has been converted into a direct current (DC) for use by the vehicles electrical system to maintain electrical loads and the battery charge. The voltage regulator integral to the generator controls the output of the generator. It is not serviceable. The voltage regulator controls the amount of current provided to the rotor. If the generator has field control circuit failure, the generator defaults to an output voltage of 13.8 V.

#### Body Control Module (BCM)

The body control module (BCM) is a GMLAN device. It communicates with the engine control module (ECM) and the instrument panel cluster for electrical power management (electrical power management) operation. The BCM determines the output of the generator and sends the information to the ECM for control of the generator turn on signal circuit. It monitors the generator field duty cycle signal circuit information sent from the ECM for control of the generator. It monitors a battery current sensor, the battery positive voltage circuit, and estimated battery temperature to determine battery state of charge. The BCM performs idle boost.

#### Battery Current Sensor

The battery current sensor is a serviceable component that is connected to either the negative or positive battery cable at the battery. The battery current sensor is a 3-wire hall effect current sensor. The battery current sensor monitors the battery current. It directly inputs to the BCM. It creates a 5-volt pulse width modulation (PWM) signal of 128 Hz with a duty cycle of 0–100 percent. Normal duty cycle is between 5–95 percent. Between 0–5 percent and 95–100 percent are for diagnostic purposes.

#### Engine Control Module (ECM)

When the engine is running, the generator turn-on signal is sent to the generator from the ECM, turning on the regulator. The generator's voltage regulator controls current to the rotor, thereby controlling the output voltage. The rotor current is proportional to the electrical pulse width supplied by the regulator. When the engine is started, the regulator senses generator rotation by detecting AC voltage at the stator through an internal wire. Once the engine is running, the regulator varies the field current by controlling the pulse width. This regulates the generator output voltage for proper battery charging and electrical system operation. The generator field duty terminal is connected internally to the voltage regulator and externally to the ECM. When the voltage regulator detects a charging system problem, it grounds this circuit to signal the ECM that a problem exists. The ECM monitors the generator field duty cycle signal circuit, and receives control decisions based on information from the BCM.

#### Instrument Panel Cluster

The instrument panel cluster provides the customer notification in case a concern with the charging system. There are 2 means of notification, a charge indicator and a driver information center message of SERVICE BATTERY CHARGING SYSTEM if equipped.

## Charging System Block Diagram

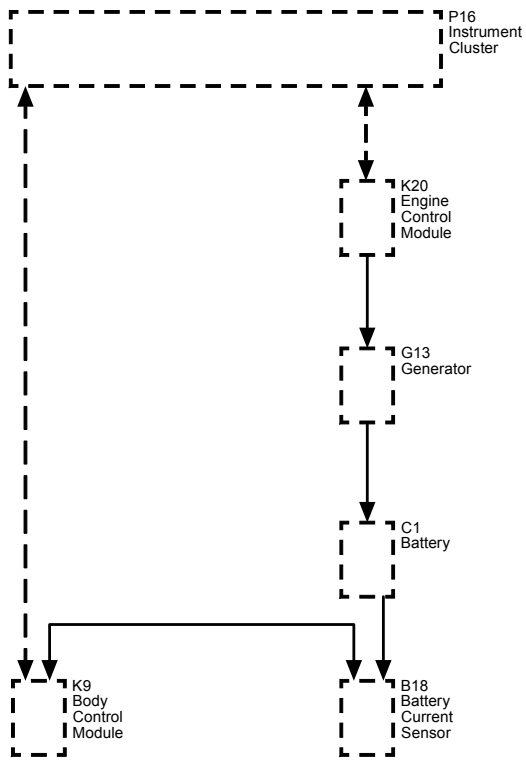


## Charging System Operation

The purpose of the charging system is to maintain the battery charge and vehicle loads. There are 6 modes of operation and they include:

- Battery Sulfation Mode
- Charge Mode
- Fuel Economy Mode
- Headlamp Mode
- Start Up Mode
- Voltage Reduction Mode

The engine control module (ECM) controls the generator through the generator turn ON signal circuit. The ECM monitors the generator performance though the generator field duty cycle signal circuit. The signal is a pulse width modulation (PWM) signal of 128 Hz with a duty cycle of 0–100 percent. Normal duty cycle is between 5–95 percent. Between 0–5 percent and 95–100 percent are for diagnostic purposes. The following table shows the commanded duty cycle and output voltage of the generator:

| Commanded Duty Cycle | Generator Output Voltage |
|---|---|
| 10% | 11 V |
| 20% | 11.56 V |
| 30% | 12.12 V |
| 40% | 12.68 V |
| 50% | 13.25 V |
| 60% | 13.81 V |
| 70% | 14.37 V |

| | |
|---|---|
| 80% | 14.94 V |
| 90% | 15.5 V |

The generator provides a feedback signal of the generator voltage output through the generator field duty cycle signal circuit to the ECM. This information is sent to the body control module (BCM). The signal is PWM signal of 128 Hz with a duty cycle of 0–100 percent. Normal duty cycle is between 5–99 percent. Between 0–5 percent and 100 percent are for diagnostic purposes.

### Battery Sulfation Mode

The BCM will enter this mode when the interpreted generator output voltage is less than 13.2 V for 45 minutes. When this condition exists the BCM will enter Charge Mode for 2–3 minutes. The BCM will then determine which mode to enter depending on voltage requirements.

### Charge Mode

The BCM will enter Charge Mode when ever one of the following conditions are met.

- The wipers are ON for more than 3 seconds.
- GMLAN (Climate Control Voltage Boost Mode Request) is true, as sensed by the HVAC control head. High speed cooling fan, rear defogger and HVAC high speed blower operation can cause the BCM to enter the Charge Mode.
- The estimated battery temperature is less than 0°C (32°F).
- Battery State of Charge is less than 80 percent.
- Vehicle speed is greater than 145 km/h (90 mph)
- Current sensor fault exists.
- System voltage was determined to be below 12.56 V

When any one of these conditions is met, the system will set targeted generator output voltage to a charging voltage between 13.9–15.5 V, depending on the battery state of charge and estimated battery temperature.

### Fuel Economy Mode

The BCM will enter Fuel Economy Mode when the estimated battery temperature is at least 0°C (32°F) but less than or equal to 80°C (176°F), the calculated battery current is less than 15 amperes and greater than −8 amperes, and the battery state-of-charge is greater than or equal to 80 percent. Its targeted generator output voltage is the open circuit voltage of the battery and can be between 12.5–13.1 V. The BCM will exit this mode and enter Charge Mode when any of the conditions described above are present.

### Headlamp Mode

The BCM will enter Headlamp Mode when ever the headlamps are ON (high or low beams). Voltage will be regulated between 13.9–14.5 V.

### Start Up Mode

When the engine is started the BCM sets a targeted generator output voltage of 14.5 V for 30 seconds.

### Voltage Reduction Mode

The BCM will enter Voltage Reduction Mode when the calculated ambient air temperature is above 0°C (32°F). The calculated battery current is less than 1 ampere and greater than −7 amperes, and the generator field duty cycle is less than 99 percent. Its targeted generator output voltage is 12.9 V. The BCM will exit this mode once the criteria are met for Charge Mode.

### Instrument Panel Cluster Operation

#### Charge Indicator Operation

The instrument panel cluster illuminates the charge indicator and displays a warning message in the driver information center if equipped, when the one or more of the following occurs:

- The engine control module (ECM) detects that the generator output is less than 11 V or greater than 16 V. The instrument panel cluster receives a GMLAN message from the ECM requesting illumination.
- The instrument panel cluster determines that the system voltage is less than 11 V or greater than 16 V for more than 30 seconds. The instrument panel cluster receives a GMLAN message from the body control module (BCM) indicating there is a system voltage range concern.
- The instrument panel cluster performs the displays test at the start of each ignition cycle. The indicator illuminates for approximately 3 seconds.

#### Display Message: BATTERY NOT CHARGING SERVICE CHARGING SYSTEM or SERVICE BATTERY CHARGING SYSTEM

The BCM and the ECM will send a serial data message to the driver information center for the BATTERY NOT CHARGING SERVICE CHARGING SYSTEM or SERVICE BATTERY CHARGING SYSTEM message to be displayed. It is commanded ON when a charging system DTC is a current DTC. The message is turned OFF when the conditions for clearing the DTC have been met.

## Electrical Power Management Description and Operation (Diesel)

The electrical power management is used to monitor and control the charging system and alert the driver of possible problems within the charging system. The electrical power management system makes the most efficient use of the generator output, improves the battery state-of-charge, extends battery life, and manages system electrical loads.

The load shed operation is a means of reducing electrical loads during a low voltage or low battery state-of-charge condition.

The idle boost operation is a means of improving generator performance during a low voltage or low battery state-of-charge condition. Idle boost consists of three steps: idle boost 1, idle boost 2, and idle boost 3 (approximately 750, 900, and 1050 rpm respectively). Idle boost is activated in incremental steps, idle boost 1 must be active before idle boost 2 can be active.

Each electrical power management function, either idle boost or load shed, is discrete. No two functions are active at the same time. The criteria used by the body control module (BCM) to regulate electrical power management are outlined below:

| Function | Battery Temperature Calculation | Battery Voltage Calculation | Amp-Hour Calculation | Action Taken |
|---|---|---|---|---|
| Idle Boost 1 Start | Less Than −15°C (5°F) | Less Than 13 V | — | First level Idle boost requested |
| Idle Boost 1 Start | — | — | Battery has a net loss greater than 0.6 AH | First level Idle boost requested |
| Idle Boost 1 Start | — | Less Than 10.9 V | — | First level Idle boost requested |
| Idle Boost 1 End | Greater Than −15°C (5°F) | Greater Than −12 V | Battery has a net loss less than 0.2 AH | First level Idle boost request cancelled |
| Load Shed 1 Start | — | — | Battery has a net loss of 4 AH | Rear Defrost, Heated Mirrors, Heated Seats cycled OFF for 20% of their cycle |
| Load Shed 1 Start | — | Less Than 10.9 V | — | Rear Defrost, Heated Mirrors, Heated Seats cycled OFF for 20% of their cycle |
| Load Shed 1 End | — | Greater Than 12 V | Battery has a net loss of less than 2 AH | Clear Load Shed 1 |
| Idle Boost 2 Start | — | — | Battery has a net loss greater than 1.6 AH | Second level Idle boost requested |
| Idle Boost 2 Start | — | Less Than 10.9 V | — | Second level Idle boost requested |
| Idle Boost 2 End | — | Greater Than 12 V | Battery has a net loss less than 0.8 AH | Second level Idle boost request cancelled |
| Idle Boost 3 Start | — | — | Battery has a net loss of 10.0 AH | Third level Idle boost requested |
| Idle Boost 3 Start | — | Less Than 10.9 V | — | Third level Idle boost requested |
| Idle Boost 3 End | — | Greater Than 12 V | Battery has a net loss of less than 6.0 AH | Third level Idle boost request cancelled |
| Load Shed 2 Start | — | Less Than 10.9 V | Battery has a net loss greater than 12 AH | Rear Defrost, Heated Mirrors, Heated Seats cycled OFF for 50% of their cycle. The BATTERY SAVER ACTIVE message will be displayed on the DIC |

| | | | | |
|---|---|---|---|---|
| Load Shed 2 Start | — | Less Than 10.9 V | — | Rear Defrost, Heated Mirrors, Heated Seats cycled OFF for 50% of their cycle. The BATTERY SAVER ACTIVE message will be displayed on the DIC |
| Load Shed 2 End | — | Greater Than 12.6 V | Battery has a net loss of less than 10.5 AH | Clear Load Shed 2 |
| Load Shed 3 Start | — | Less Than 11.9 V | Battery has a net loss greater than 20 AH | Rear Defrost, Heated Mirrors, Heated Seats cycled OFF for 100% of their cycle. The BATTERY SAVER ACTIVE message will be displayed on the DIC |
| Load Shed 3 End | — | Greater Than 12.6 V | Battery has a net loss of less than 15 AH | Clear Load Shed 3 |

## Electrical Power Management Description and Operation (Gasoline)

The electrical power management is used to monitor and control the charging system and alert the driver of possible problems within the charging system. The electrical power management system makes the most efficient use of the generator output, improves the battery state-of-charge, extends battery life, and manages system electrical loads.

The load shed operation is a means of reducing electrical loads during a low voltage or low battery state-of-charge condition.

The idle boost operation is a means of improving generator performance during a low voltage or low battery state-of-charge condition.

Each electrical power management function, either idle boost or load shed, is discrete. No two functions are active at the same time. Idle boost is activated in incremental steps, idle boost 1 must be active before idle boost 2 can be active. The criteria used by the body control module (BCM) to regulate electrical power management are outlined below:

| Function | Battery Temperature Calculation | Battery Voltage Calculation | Amp-Hour Calculation | Action Taken |
|---|---|---|---|---|
| Idle Boost 1 Start | Less Than −15°C (5°F) | Less Than 13 V | — | First level Idle boost requested |
| Idle Boost 1 Start | — | — | Battery has a net loss greater than 0.6 AH | First level Idle boost requested |
| Idle Boost 1 Start | — | Less Than 10.9 V | — | First level Idle boost requested |
| Idle Boost 1 End | Greater Than −15°C (5°F) | Greater Than −12 V | Battery has a net loss less than 0.2 AH | First level Idle boost request cancelled |
| Load Shed 1 Start | — | — | Battery has a net loss of 4 AH | Rear Defrost, Heated Mirrors, Heated Seats cycled OFF for 20% of their cycle |
| Load Shed 1 Start | — | Less Than 10.9 V | — | Rear Defrost, Heated Mirrors, Heated Seats cycled OFF for 20% of their cycle |
| Load Shed 1 End | — | Greater Than 12 V | Battery has a net loss of less than 2 AH | Clear Load Shed 1 |
| Idle Boost 2 Start | — | — | Battery has a net loss greater than 1.6 AH | Second level Idle boost requested |
| Idle Boost 2 Start | — | Less Than 10.9 V | — | Second level Idle boost requested |
| Idle Boost 2 End | — | Greater Than 12 V | Battery has a net loss less than 0.8 AH | Second level Idle boost request cancelled |
| Idle Boost 3 Start | — | — | Battery has a net loss of 10.0 AH | Third level Idle boost requested |
| Idle Boost 3 Start | — | Less Than 10.9 V | — | Third level Idle boost requested |
| Idle Boost 3 End | — | Greater Than 12 V | Battery has a net loss of less than 6.0 AH | Third level Idle boost request cancelled |
| Load Shed 2 Start | — | Less Than 10.9 V | Battery has a net loss greater than 12 AH | Rear Defrost, Heated Mirrors, Heated Seats cycled OFF for 50% of their cycle. The BATTERY SAVER ACTIVE message will be displayed on the DIC |

| | | | | |
|---|---|---|---|---|
| Load Shed 2 Start | — | Less Than 10.9 V | — | Rear Defrost, Heated Mirrors, Heated Seats cycled OFF for 50% of their cycle. The BATTERY SAVER ACTIVE message will be displayed on the DIC |
| Load Shed 2 End | — | Greater Than 12.6 V | Battery has a net loss of less than 10.5 AH | Clear Load Shed 2 |
| Load Shed 3 Start | — | Less Than 11.9 V | Battery has a net loss greater than 20 AH | Rear Defrost, Heated Mirrors, Heated Seats cycled OFF for 100% of their cycle. The BATTERY SAVER ACTIVE message will be displayed on the DIC |
| Load Shed 3 End | — | Greater Than 12.6 V | Battery has a net loss of less than 15 AH | Clear Load Shed 3 |

## Starting System Description and Operation

The starter motors are non-repairable starter motors. They have pole pieces that are arranged around the armature. Both solenoid windings are energized. The pull-in winding circuit is completed to the ground through the starter motor. The windings work together magnetically to pull and hold in the plunger. The plunger moves the shift lever. This action causes the starter drive assembly to rotate on the armature shaft spline as it engages with the flywheel ring gear on the engine. Moving at the same time, the plunger also closes the solenoid switch contacts in the starter solenoid. Full battery voltage is applied directly to the starter motor and it cranks the engine.

As soon as the solenoid switch contacts close, current stops flowing thorough the pull-in winding because battery voltage is applied to both ends of the windings. The hold-in winding remains energized. Its magnetic field is strong enough to hold the plunger, shift lever, starter drive assembly, and solenoid switch contacts in place to continue cranking the engine. When the engine starts, pinion overrun protects the armature from excessive speed until the switch is opened.

When the ignition switch is released from the START position, the START relay opens and battery voltage is removed from the starter solenoid S terminal. Current flows from the motor contacts through both windings to the ground at the end of the hold-in winding. However, the direction of the current flow through the pull-in winding is now opposite the direction of the current flow when the winding was first energized.

The magnetic fields of the pull-in and hold-in windings now oppose one another. This action of the windings, along with the help of the return spring, causes the starter drive assembly to disengage and the solenoid switch contacts to open simultaneously. As soon as the contacts open, the starter circuit is turned off.

### Circuit Description (Key Start)

When the ignition switch is placed in the Start position, a discrete signal is supplied to the body control module (BCM) notifying it that the ignition is in the Start position. The BCM then sends a message to the engine control module (ECM) notifying it that CRANK has been requested. The ECM verifies that the transmission is in Park or Neutral. If it is, the ECM then supplies 12 V to the control circuit of the crank relay. When this occurs, battery positive voltage is supplied through the switch side of the crank relay to the S terminal of the starter solenoid.

### Starting System Block Diagram

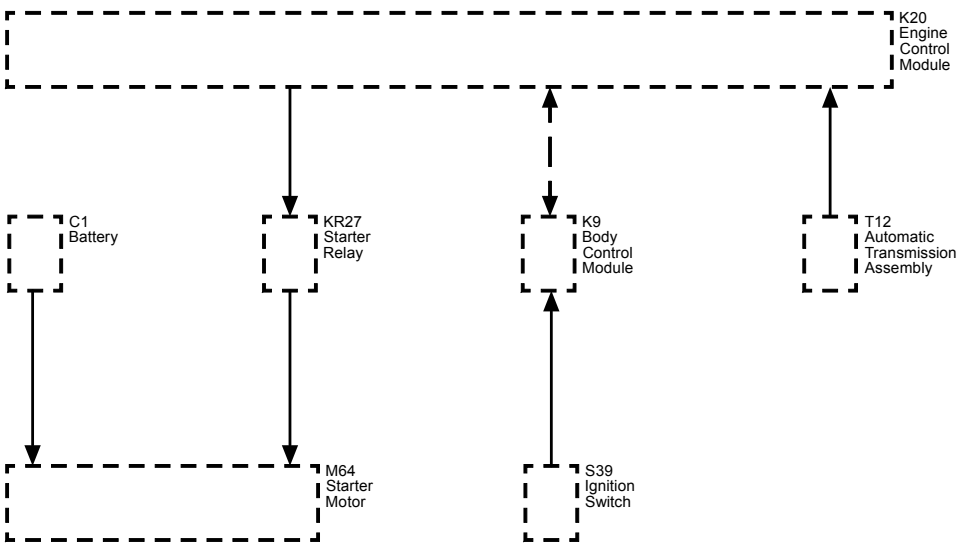

# Cruise Control

## Schematic and Routing Diagrams

### Cruise Control Schematics

#### Cruise Control

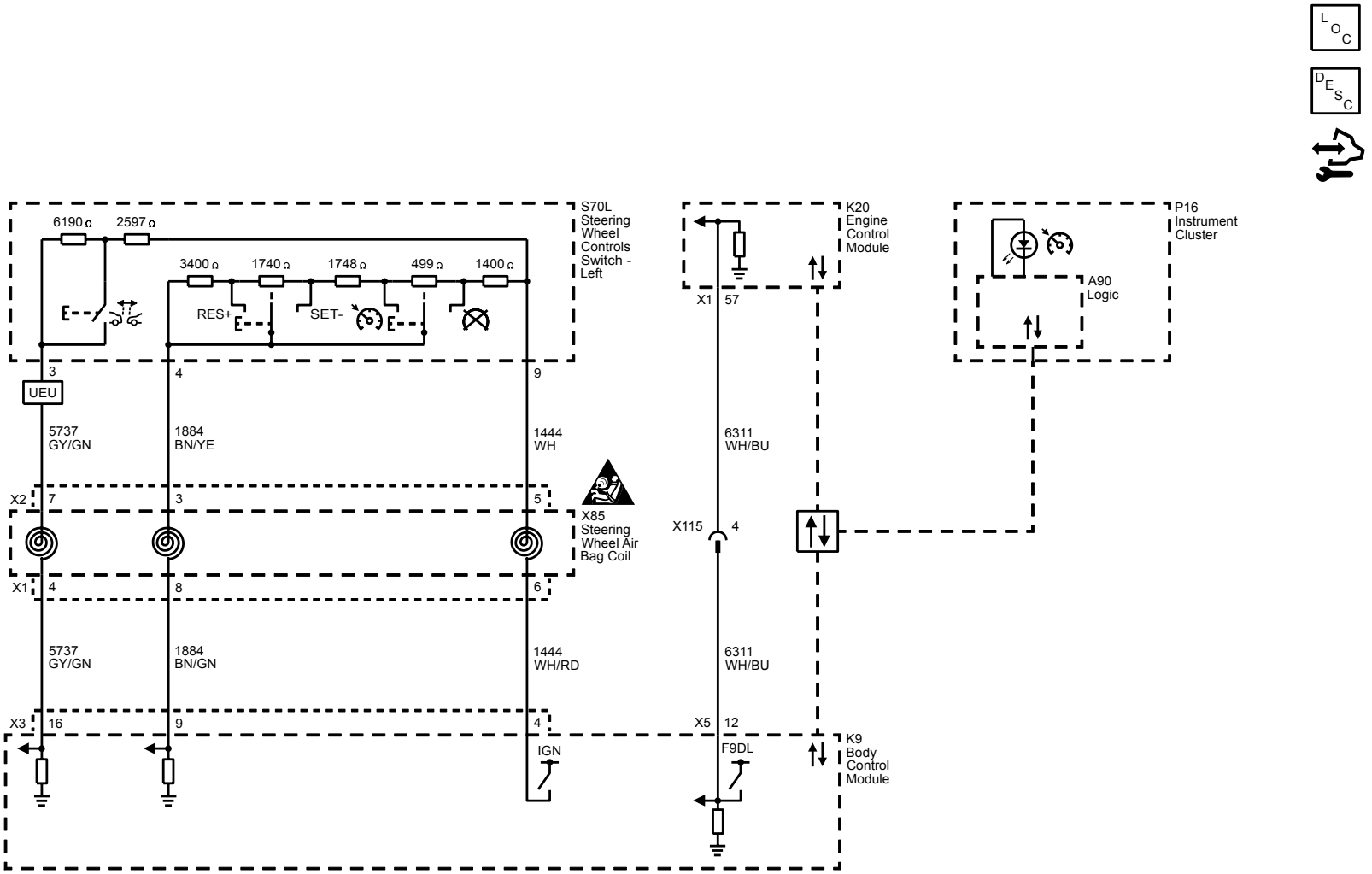

# Engine Controls and Fuel - 4.3L (LV1 LV3)

## Schematic and Routing Diagrams

# Engine Controls and Fuel - 6.0L (L96, LC8)

## Schematic and Routing Diagrams

### Engine Controls Schematics

#### Power, Ground, Serial Data, and MIL

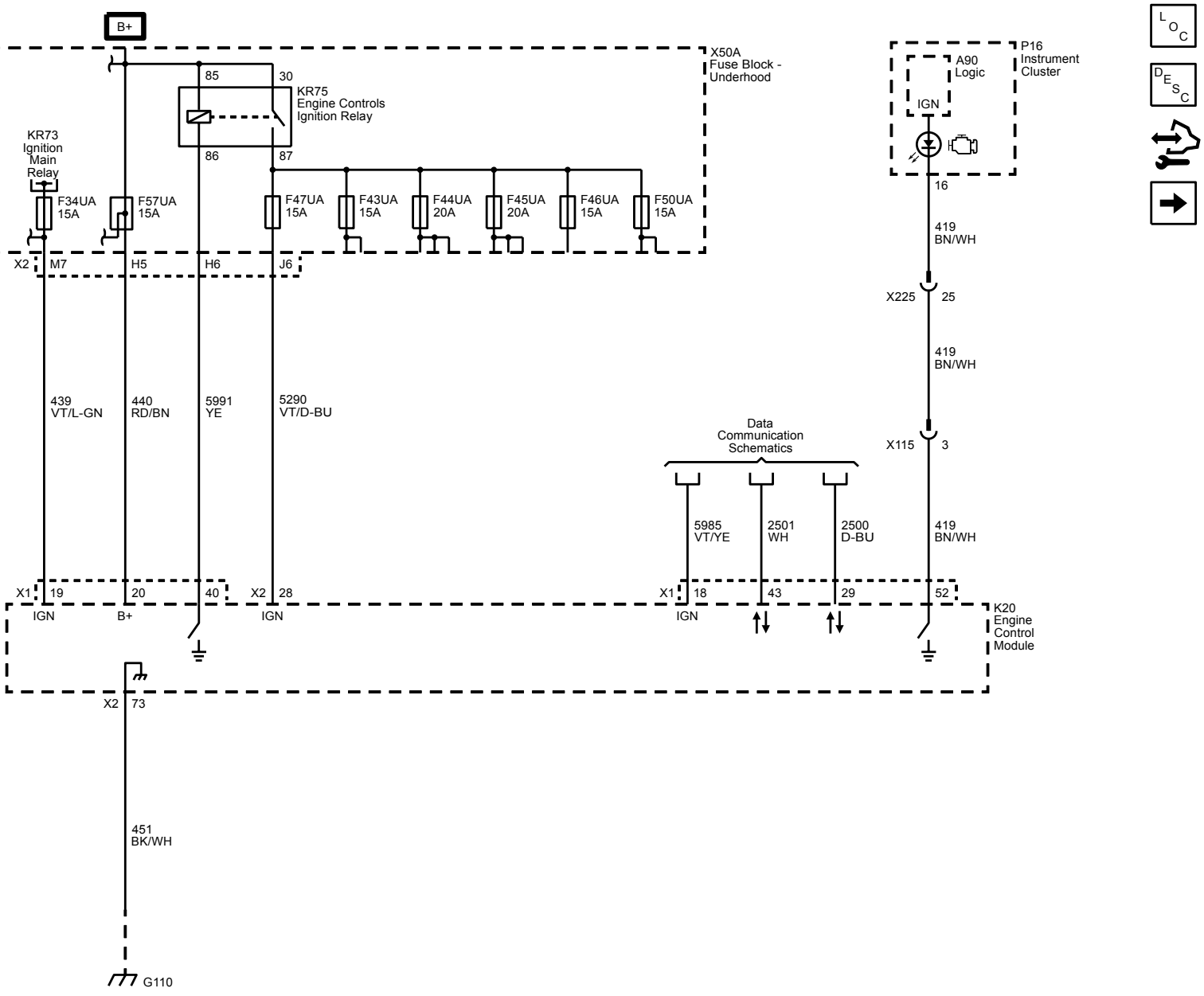

## 5V1, 5V3, 5V4, and Low Reference Bus (1 of 2)

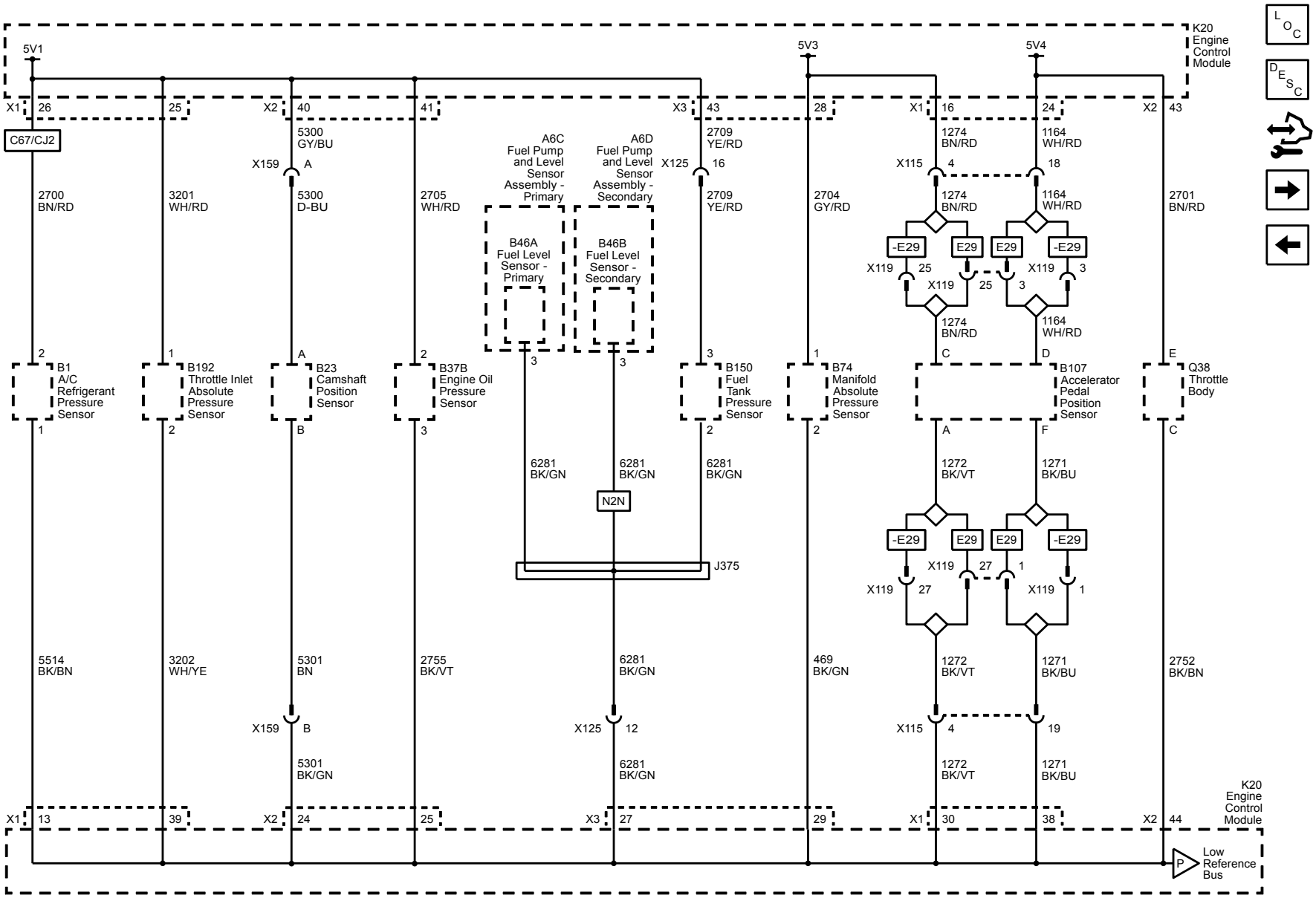

## 5V2 and Low Reference Bus (2 of 2)

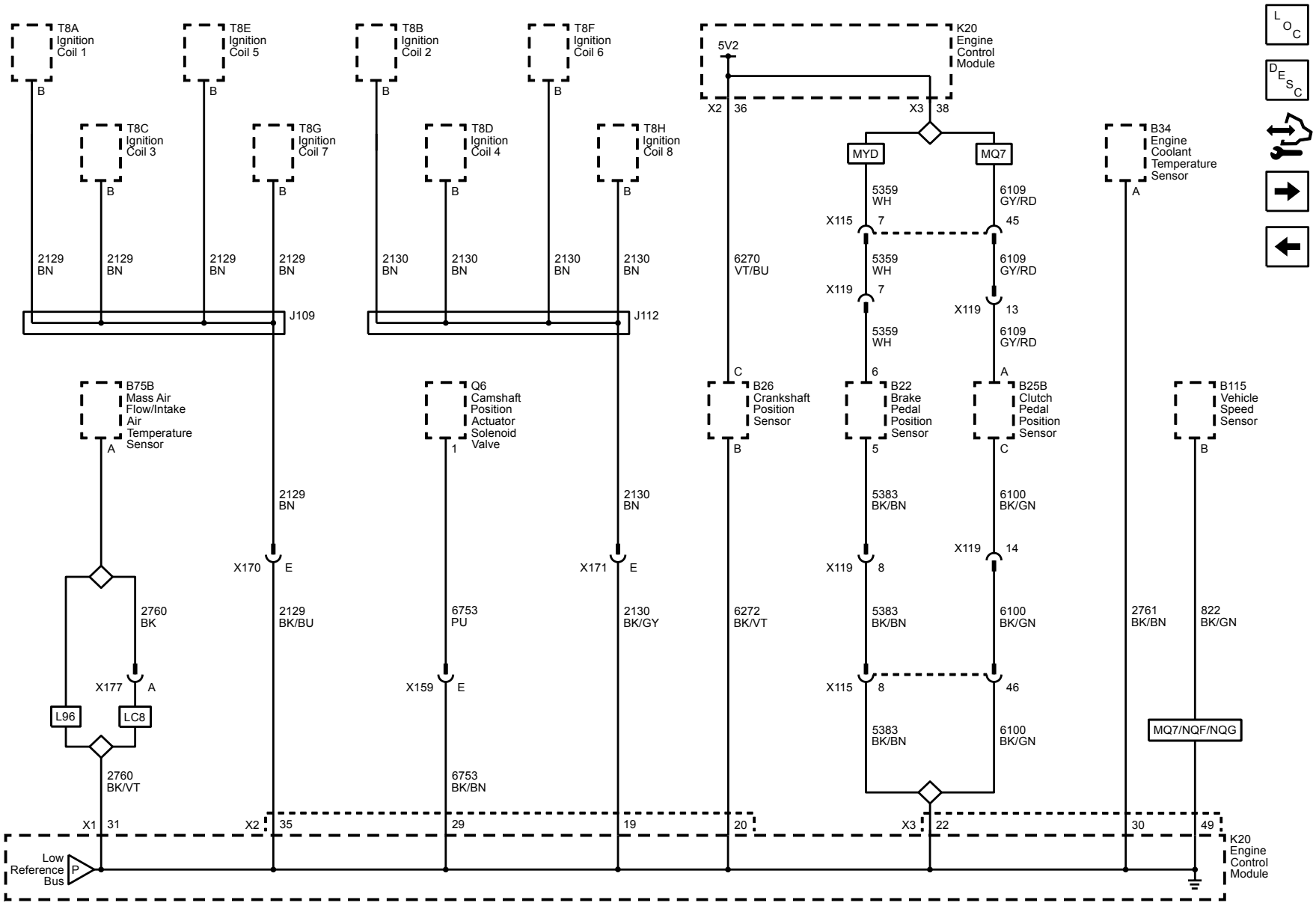

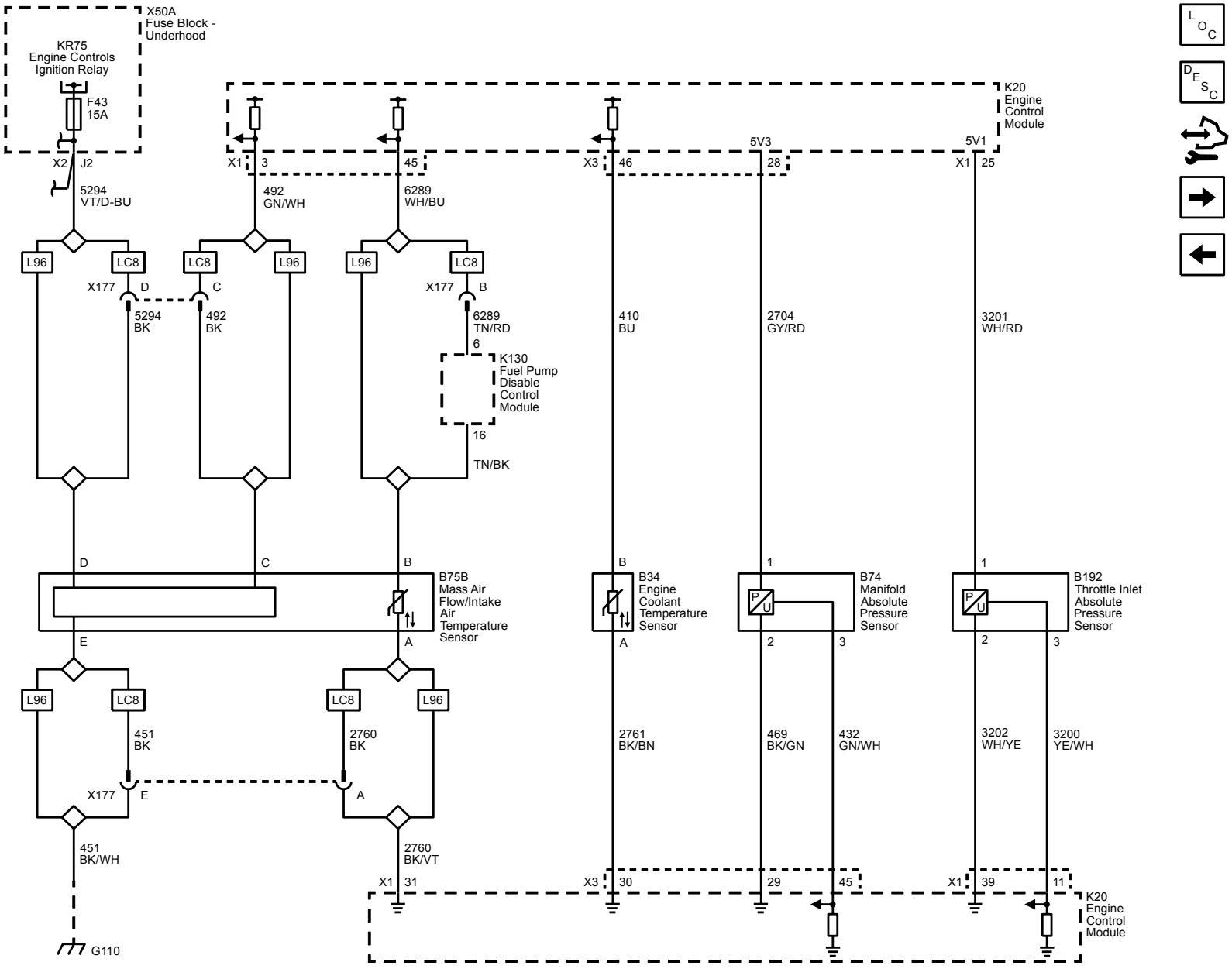
X50A
Fuse Block - Underhood
KR75
Engine Controls
Ignition Relay
F43
15A
X2
J2
5294
VT/D-BU
K20
Engine
Control
Module
X1
3
45
X3
46
5V3
28
5V1
X1
25
492
GN/WH
6289
WH/BU
410
BU
2704
GY/RD
3201
WH/RD
L96
LC8
X177
D
C
5294
BK
492
BK
X177
B
6289
TN/RD
6
K130
Fuel Pump
Disable
Control
Module
16
TN/BK
D
C
B
B75B
Mass Air
Flow/Intake
Air
Temperature
Sensor
B
B34
Engine
Coolant
Temperature
Sensor
A
1
B74
Manifold
Absolute
Pressure
Sensor
2
3
1
B192
Throttle Inlet
Absolute
Pressure
Sensor
2
3
E
A
451
BK
2760
BK
X177
E
A
451
BK/WH
2760
BK/VT
2761
BK/BN
469
BK/GN
432
GN/WH
3202
WH/YE
3200
YE/WH
G110
X1
31
X3
30
29
45
X1
39
11
K20
Engine
Control
Module

# Engine Data Sensors - Heated Oxygen Sensors (without ZW9)

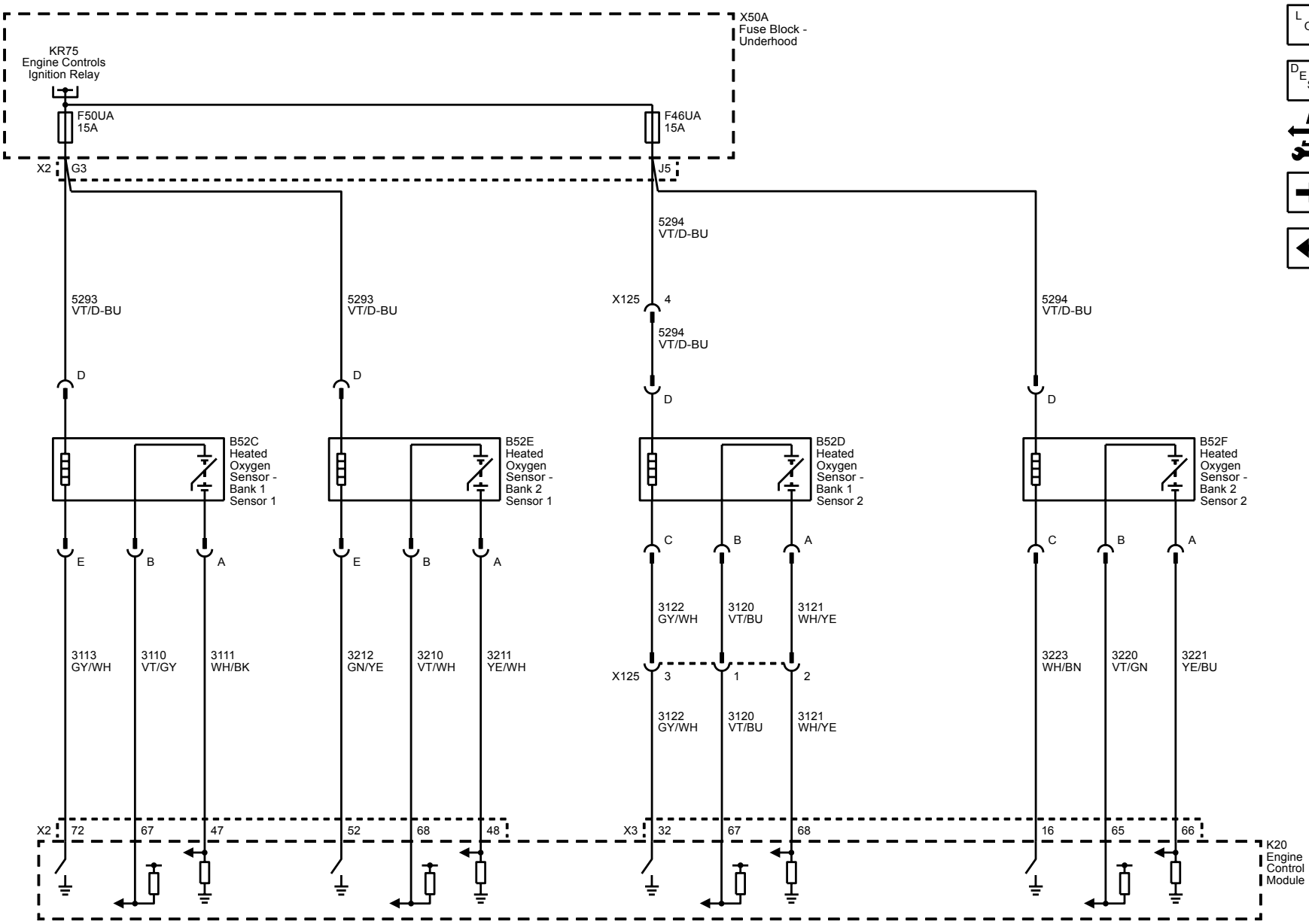

# Engine Data Sensors - Heated Oxygen Sensors (ZW9)

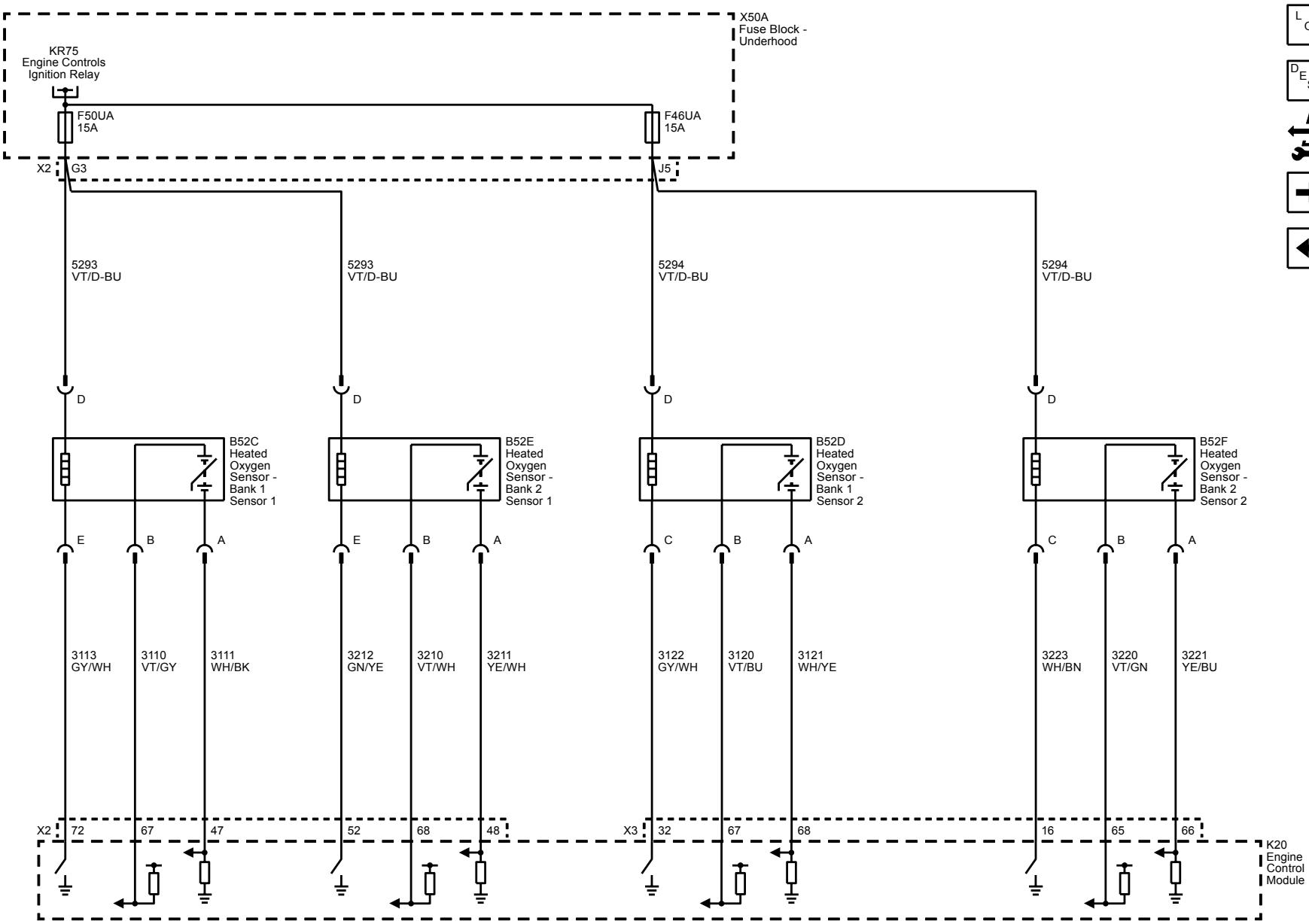

# Engine Data Sensors - Throttle Controls and Override (without E29)

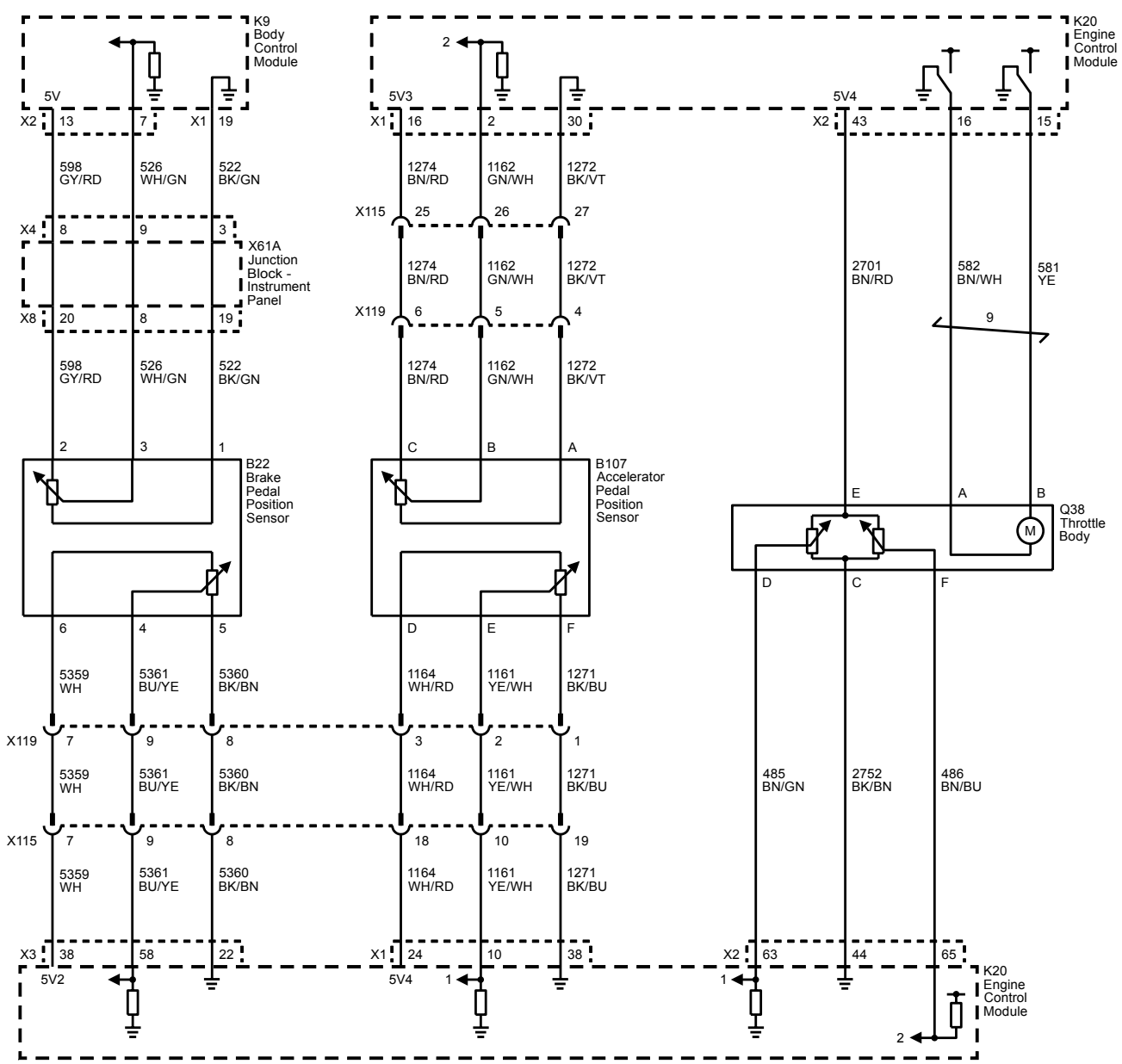

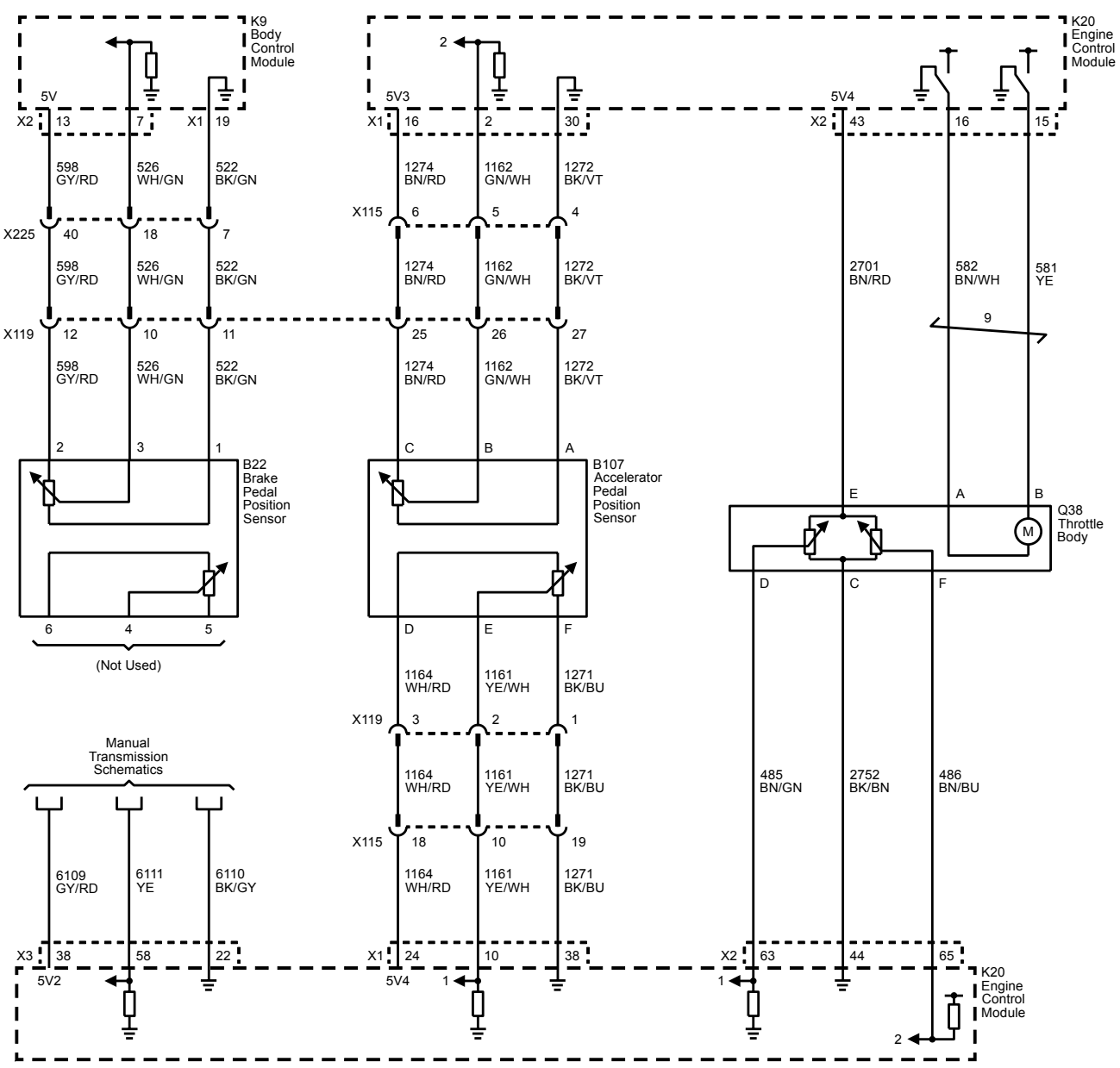
K9
Body
Control
Module
5V
X2 13 7 X1 19
598 GY/RD
526 WH/GN
522 BK/GN
X225 40 18 7
X119 12 10 11
2 3 1
B22
Brake
Pedal
Position
Sensor
6 4 5
(Not Used)
Manual
Transmission
Schematics
6109 GY/RD
6111 YE
6110 BK/GY
X3 38 58 22
5V2
K20
Engine
Control
Module
5V3
X1 16 2 30
1274 BN/RD
1162 GN/WH
1272 BK/VT
X115 6 5 4
25 26 27
C B A
B107
Accelerator
Pedal
Position
Sensor
D E F
1164 WH/RD
1161 YE/WH
1271 BK/BU
X119 3 2 1
X115 18 10 19
X1 24 10 38
5V4
5V4
X2 43 16 15
2701 BN/RD
582 BN/WH
581 YE
9
E A B
Q38
Throttle
Body
M
D C F
485 BN/GN
2752 BK/BN
486 BN/BU
X2 63 44 65
1
2

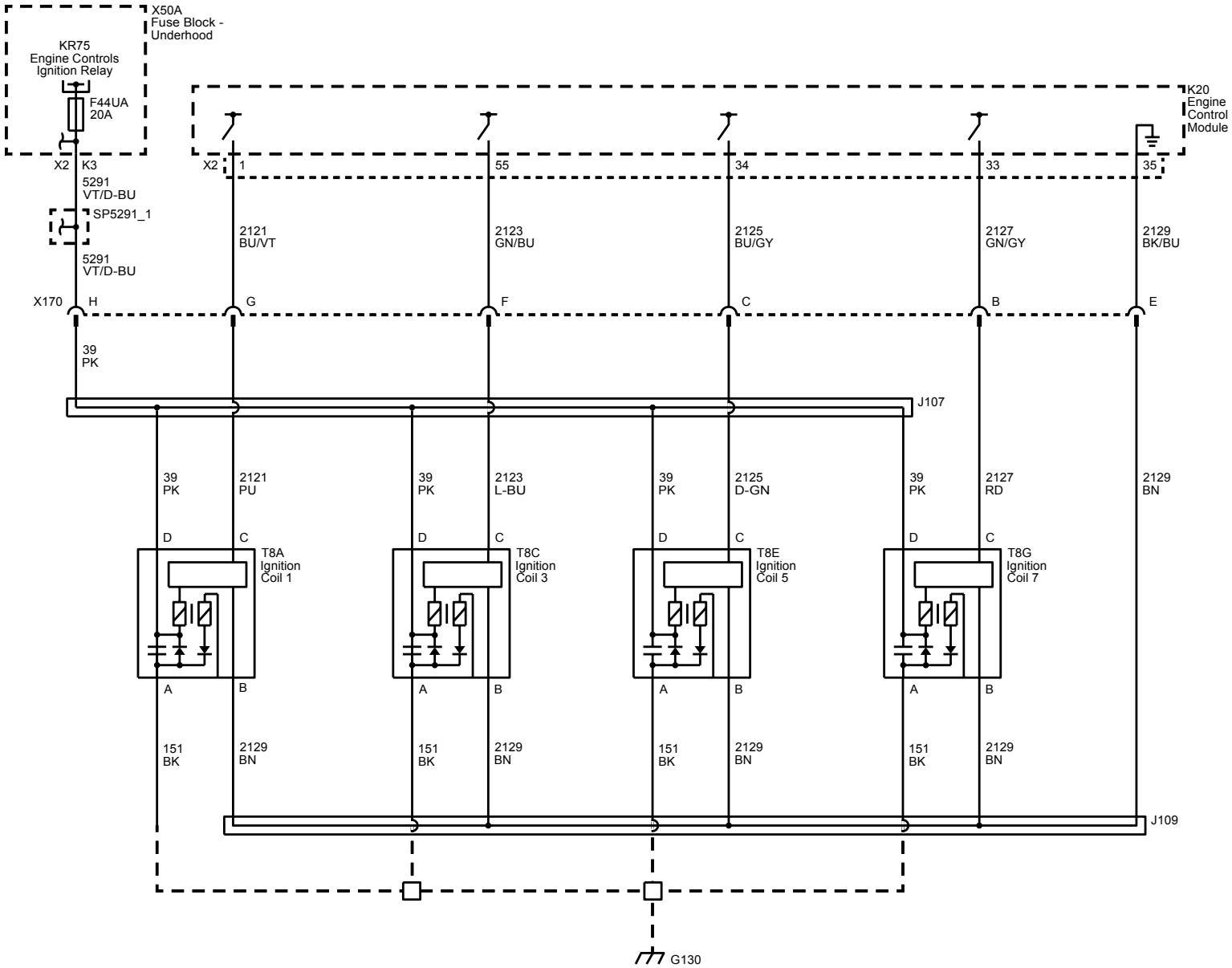
X50A
Fuse Block - Underhood
KR75
Engine Controls
Ignition Relay
F44UA
20A
X2
K3
5291
VT/D-BU
SP5291_1
5291
VT/D-BU
X170
H
39
PK
K20
Engine
Control
Module
X2
1
55
34
33
35
2121
BU/VT
2123
GN/BU
2125
BU/GY
2127
GN/GY
2129
BK/BU
G
F
C
B
E
J107
39
PK
2121
PU
2123
L-BU
2125
D-GN
2127
RD
2129
BN
D
C
T8A
Ignition
Coil 1
T8C
Ignition
Coil 3
T8E
Ignition
Coil 5
T8G
Ignition
Coil 7
A
B
151
BK
2129
BN
J109
G130

# Ignition Controls - Ignition System Coils 2, 4, 6, and 8

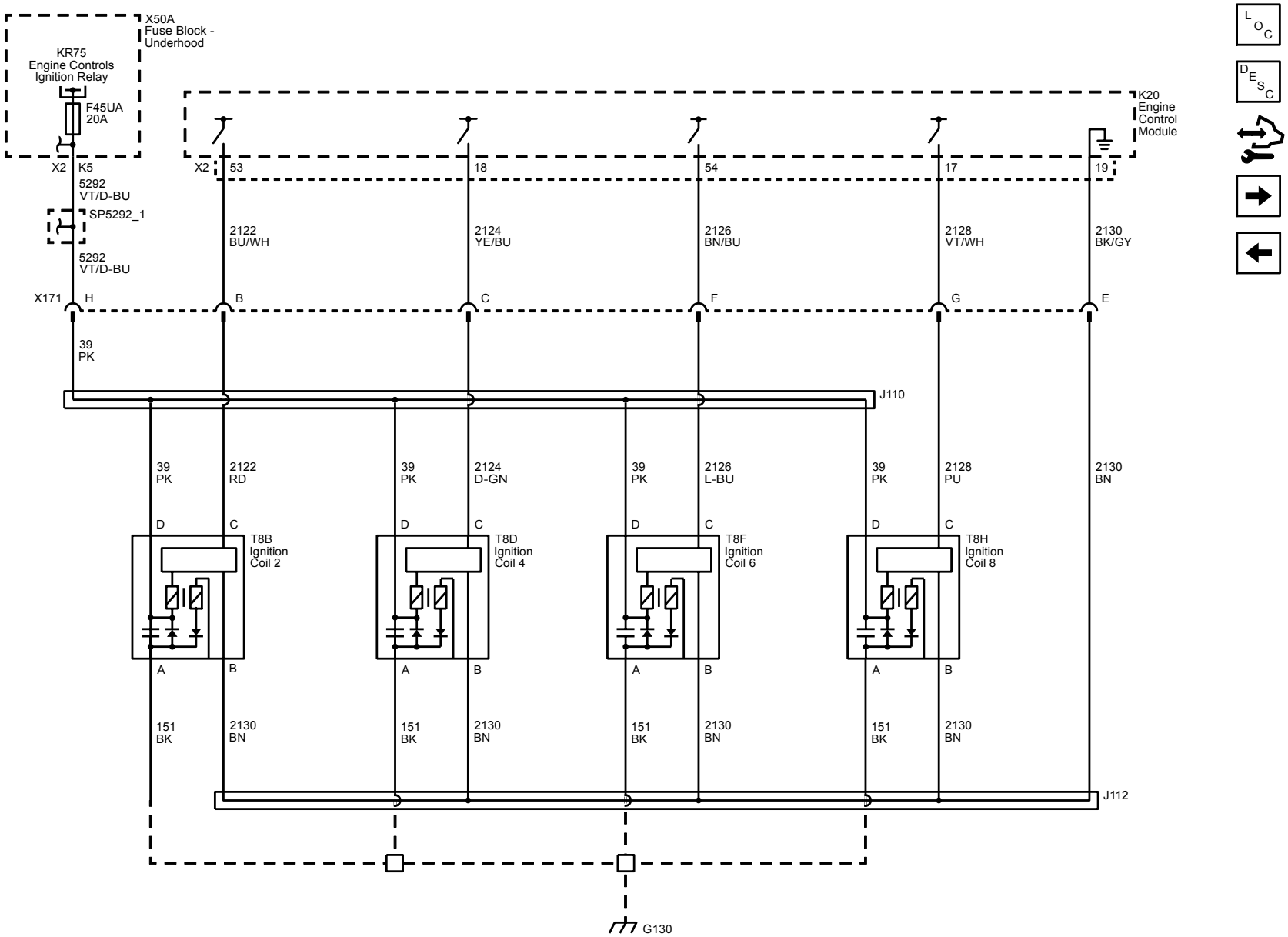

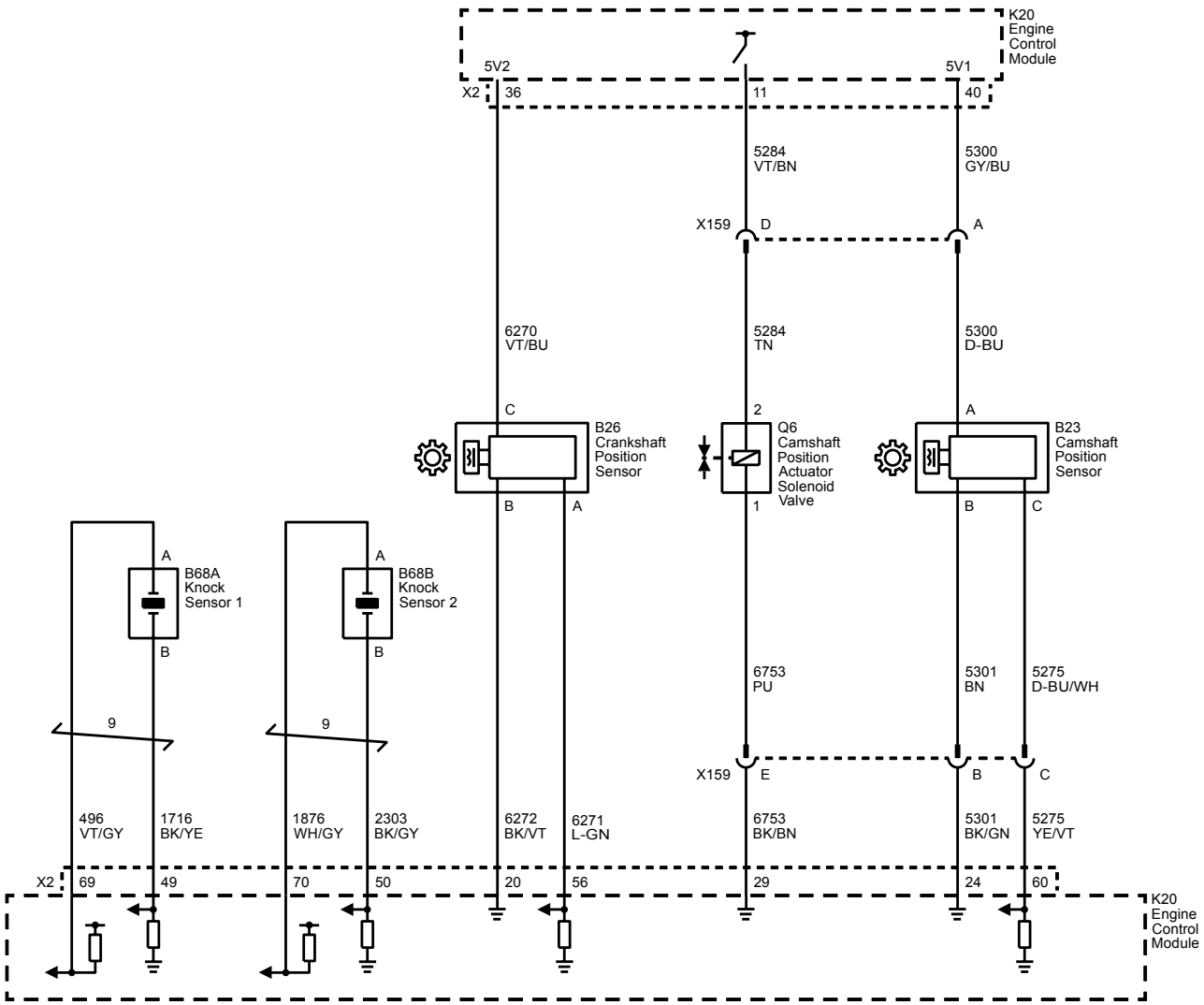
K20
Engine
Control
Module
5V2
X2
36
11
5V1
40
5284
VT/BN
5300
GY/BU
X159
D
A
6270
VT/BU
5284
TN
5300
D-BU
C
2
A
B26
Crankshaft
Position
Sensor
Q6
Camshaft
Position
Actuator
Solenoid
Valve
B23
Camshaft
Position
Sensor
B
A
1
B
C
A
B68A
Knock
Sensor 1
B
A
B68B
Knock
Sensor 2
B
9
9
6753
PU
5301
BN
5275
D-BU/WH
X159
E
B
C
496
VT/GY
1716
BK/YE
1876
WH/GY
2303
BK/GY
6272
BK/VT
6271
L-GN
6753
BK/BN
5301
BK/GN
5275
YE/VT
X2
69
49
70
50
20
56
29
24
60
K20
Engine
Control
Module

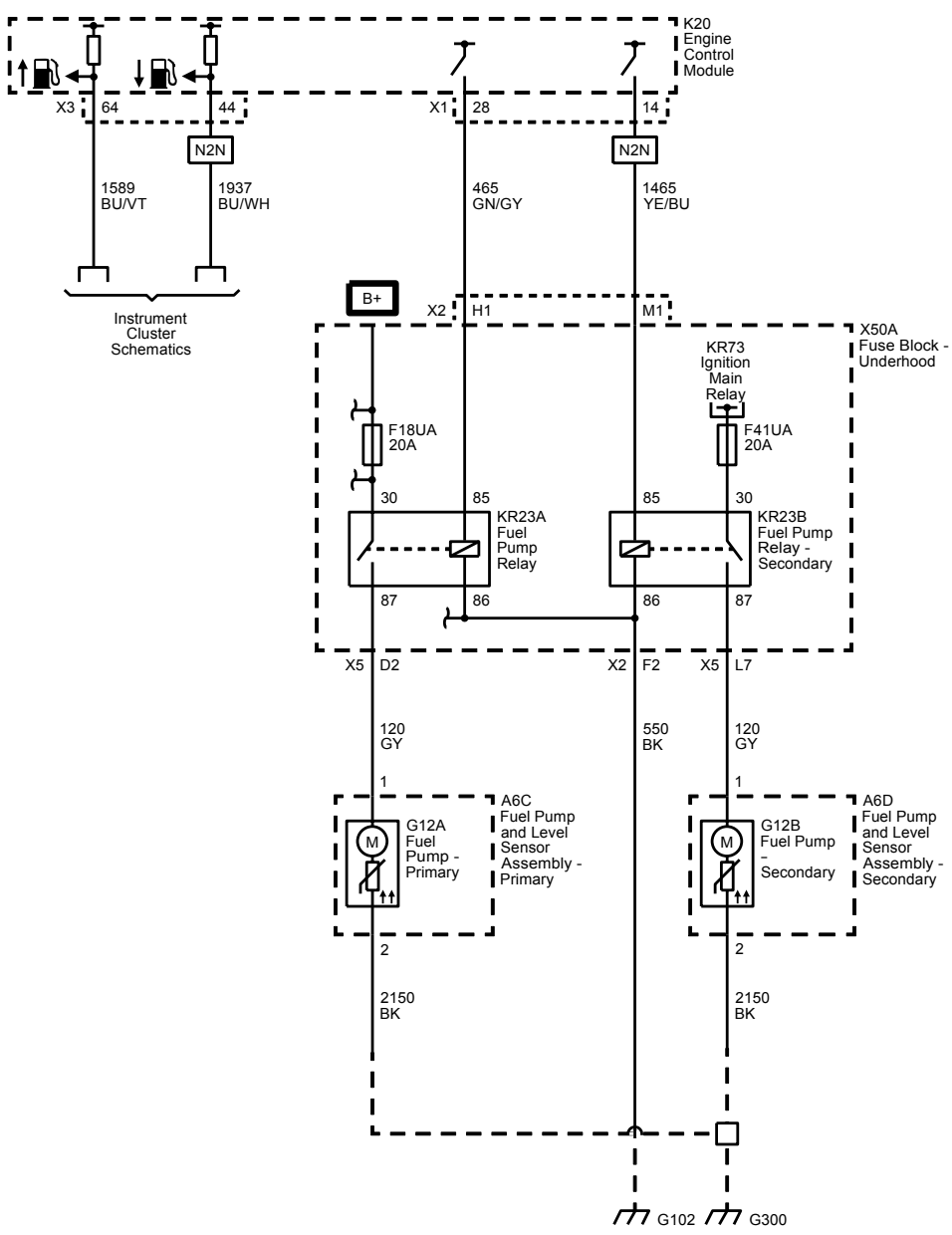
K20
Engine
Control
Module
X3
64
44
X1
28
14
N2N
N2N
1589
BU/VT
1937
BU/WH
465
GN/GY
1465
YE/BU
Instrument
Cluster
Schematics
B+
X2
H1
M1
X50A
Fuse Block -
Underhood
KR73
Ignition
Main
Relay
F18UA
20A
F41UA
20A
30
85
85
30
KR23A
Fuel
Pump
Relay
KR23B
Fuel Pump
Relay -
Secondary
87
86
86
87
X5
D2
X2
F2
X5
L7
120
GY
550
BK
120
GY
1
1
A6C
Fuel Pump
and Level
Sensor
Assembly -
Primary
G12A
Fuel
Pump -
Primary
G12B
Fuel Pump
-
Secondary
A6D
Fuel Pump
and Level
Sensor
Assembly -
Secondary
2
2
2150
BK
2150
BK
G102
G300

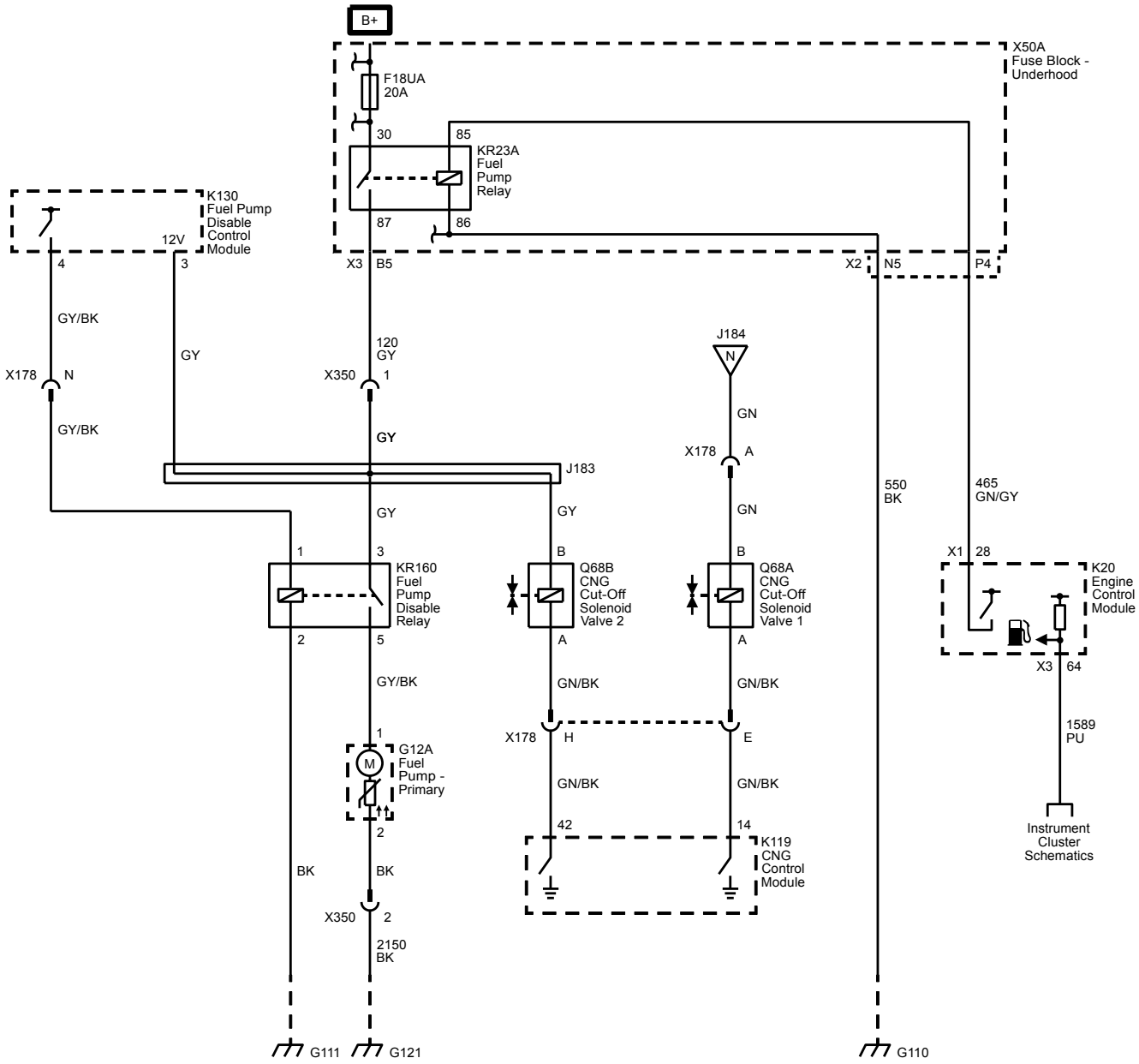
B+
F18UA
20A
30
85
KR23A
Fuel
Pump
Relay
87
86
X50A
Fuse Block -
Underhood
K130
Fuel Pump
Disable
Control
Module
12V
4
3
X3
B5
X2
N5
P4
GY/BK
GY
X178
N
X350
1
120
GY
GY/BK
GY
J183
J184
N
GN
X178
A
GN
550
BK
465
GN/GY
1
3
KR160
Fuel
Pump
Disable
Relay
2
5
B
Q68B
CNG
Cut-Off
Solenoid
Valve 2
A
B
Q68A
CNG
Cut-Off
Solenoid
Valve 1
A
X1
28
K20
Engine
Control
Module
X3
64
GY/BK
GN/BK
GN/BK
1589
PU
1
G12A
Fuel
Pump -
Primary
2
X178
H
E
GN/BK
GN/BK
42
14
K119
CNG
Control
Module
Instrument
Cluster
Schematics
BK
BK
X350
2
2150
BK
G111
G121
G110

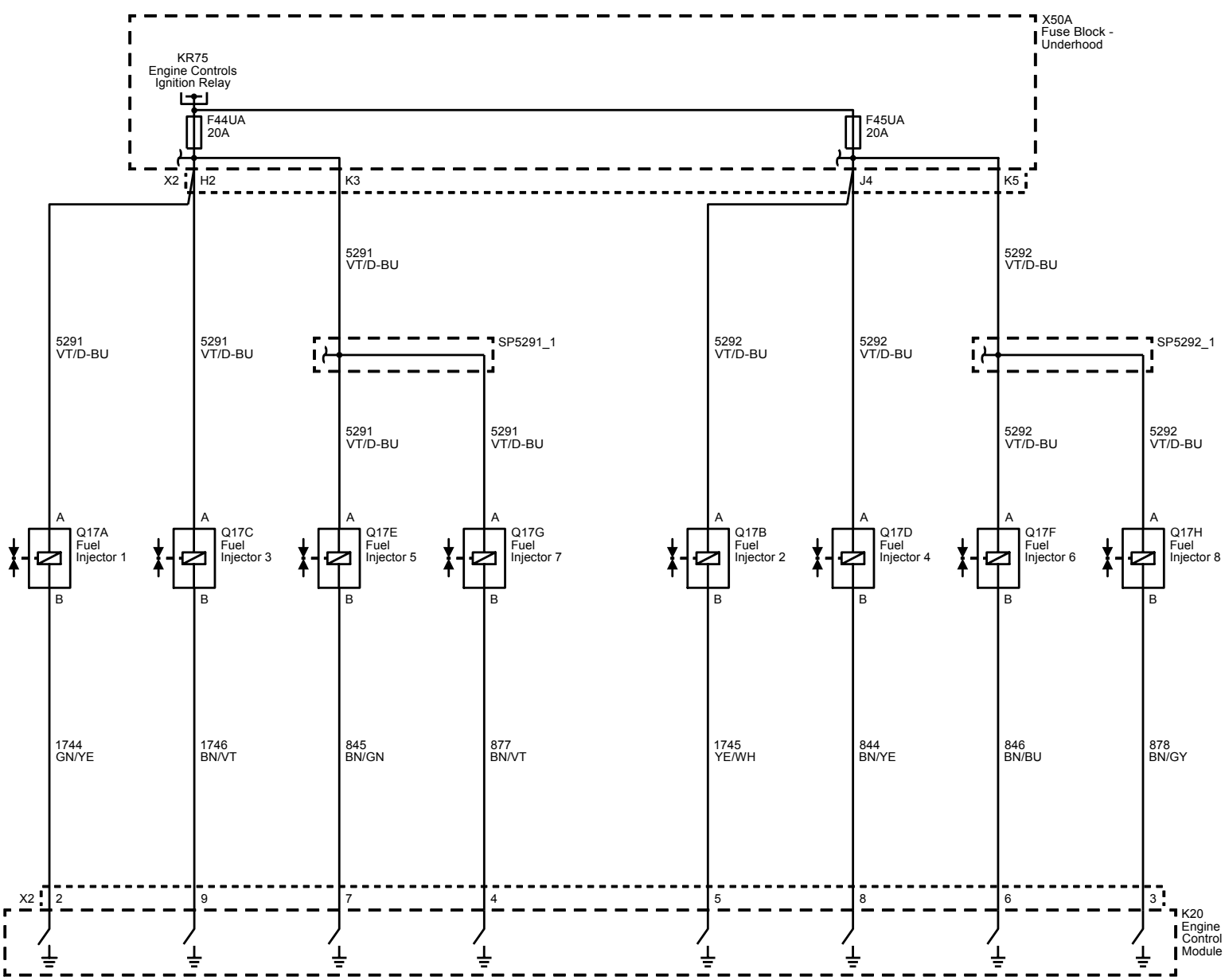
X50A
Fuse Block - Underhood
KR75
Engine Controls
Ignition Relay
F44UA
20A
F45UA
20A
X2
H2
K3
J4
K5
5291
VT/D-BU
5292
VT/D-BU
SP5291_1
SP5292_1
A
B
Q17A
Fuel
Injector 1
Q17C
Fuel
Injector 3
Q17E
Fuel
Injector 5
Q17G
Fuel
Injector 7
Q17B
Fuel
Injector 2
Q17D
Fuel
Injector 4
Q17F
Fuel
Injector 6
Q17H
Fuel
Injector 8
1744
GN/YE
1746
BN/VT
845
BN/GN
877
BN/VT
1745
YE/WH
844
BN/YE
846
BN/BU
878
BN/GY
X2
2
9
7
4
5
8
6
3
K20
Engine
Control
Module

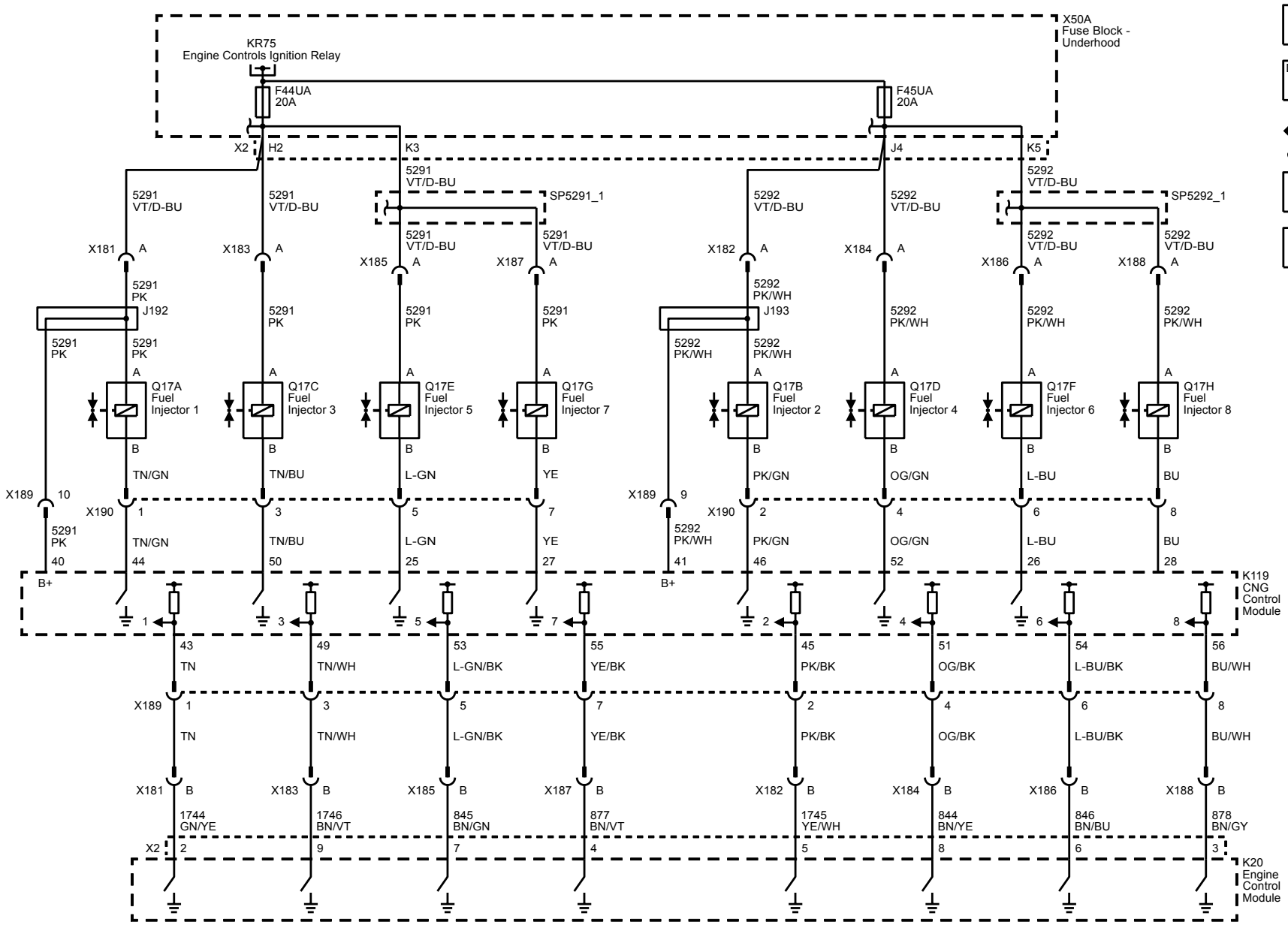
X50A
Fuse Block - Underhood
KR75
Engine Controls Ignition Relay
F44UA
20A
F45UA
20A
X2
H2
K3
J4
K5
5291 VT/D-BU
5292 VT/D-BU
SP5291_1
SP5292_1
X181
X183
X185
X187
X182
X184
X186
X188
5291 PK
5292 PK/WH
J192
J193
Q17A Fuel Injector 1
Q17C Fuel Injector 3
Q17E Fuel Injector 5
Q17G Fuel Injector 7
Q17B Fuel Injector 2
Q17D Fuel Injector 4
Q17F Fuel Injector 6
Q17H Fuel Injector 8
TN/GN
TN/BU
L-GN
YE
PK/GN
OG/GN
L-BU
BU
X189
X190
B+
K119 CNG Control Module
TN
TN/WH
L-GN/BK
YE/BK
PK/BK
OG/BK
L-BU/BK
BU/WH
1744 GN/YE
1746 BN/VT
845 BN/GN
877 BN/VT
1745 YE/WH
844 BN/YE
846 BN/BU
878 BN/GY
K20 Engine Control Module

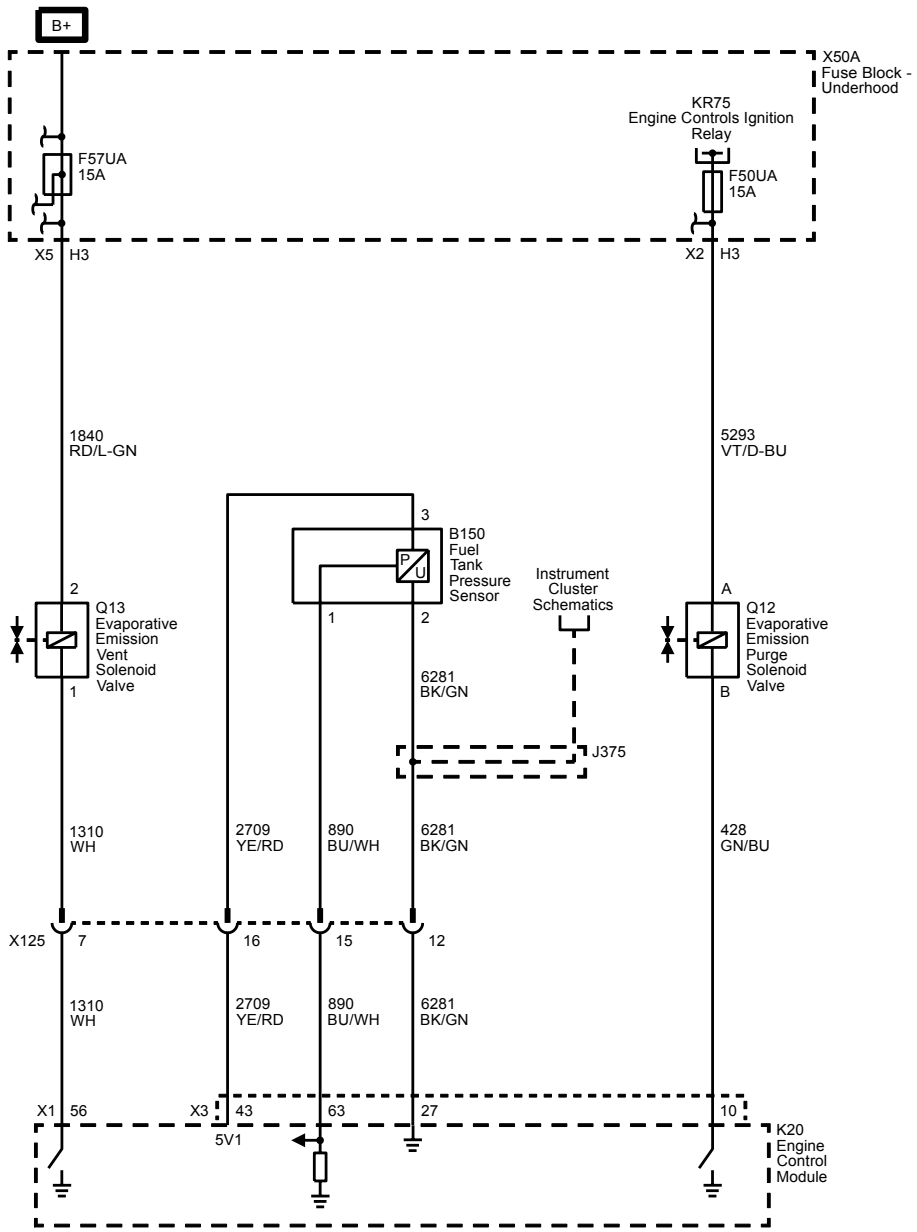
B+
X50A
Fuse Block - Underhood
KR75
Engine Controls Ignition Relay
F57UA
15A
F50UA
15A
X5
H3
X2
H3
1840
RD/L-GN
5293
VT/D-BU
3
B150
Fuel Tank Pressure Sensor
P
U
1
2
Instrument Cluster Schematics
2
Q13
Evaporative Emission Vent Solenoid Valve
1
A
Q12
Evaporative Emission Purge Solenoid Valve
B
6281
BK/GN
J375
1310
WH
2709
YE/RD
890
BU/WH
6281
BK/GN
428
GN/BU
X125
7
16
15
12
1310
WH
2709
YE/RD
890
BU/WH
6281
BK/GN
X1
56
X3
43
63
27
10
5V1
K20
Engine Control Module

## Power, Ground and Alternative Fuel Injectors (LC8)

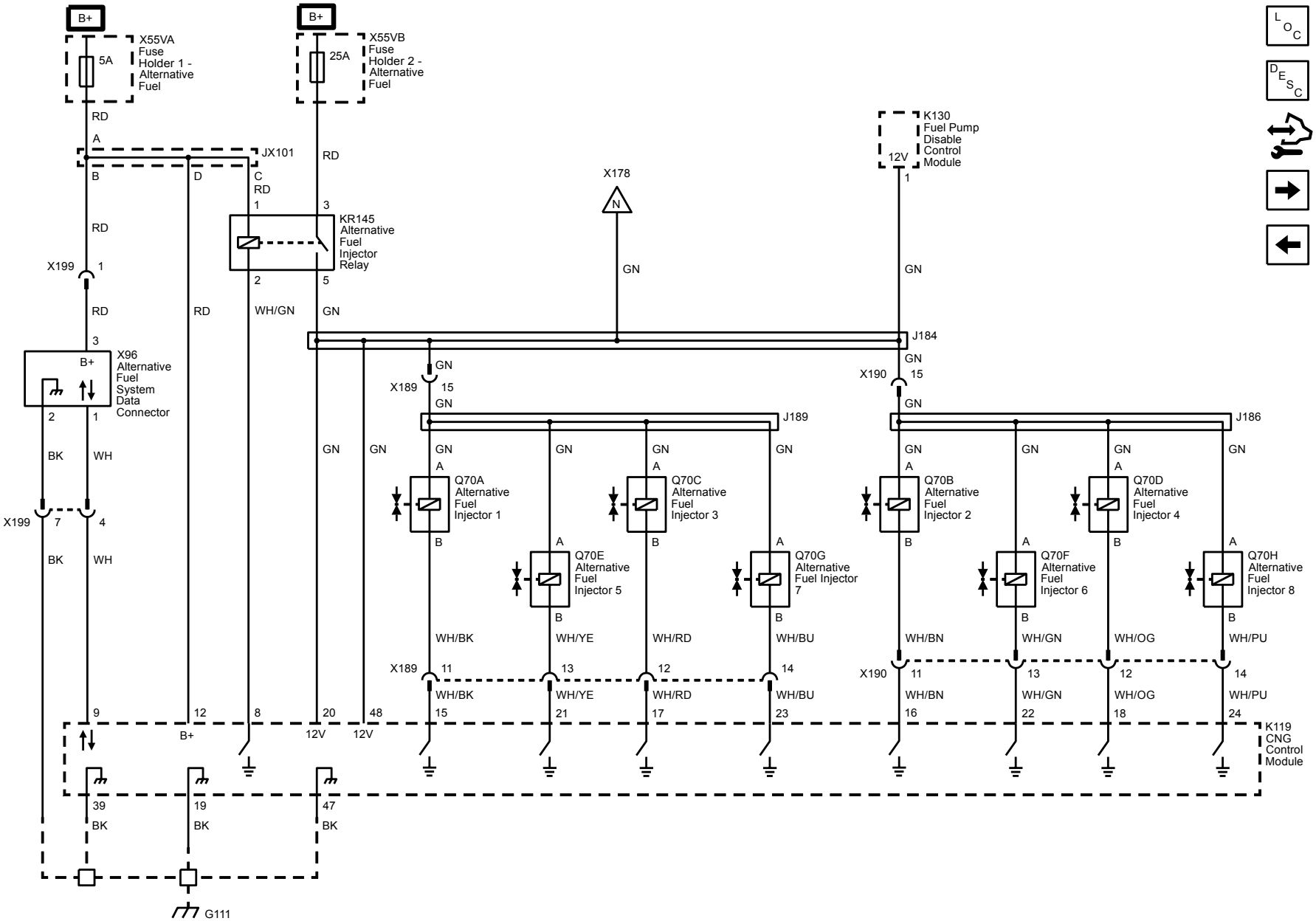

## CNG Pressure and Temperature (LC8)

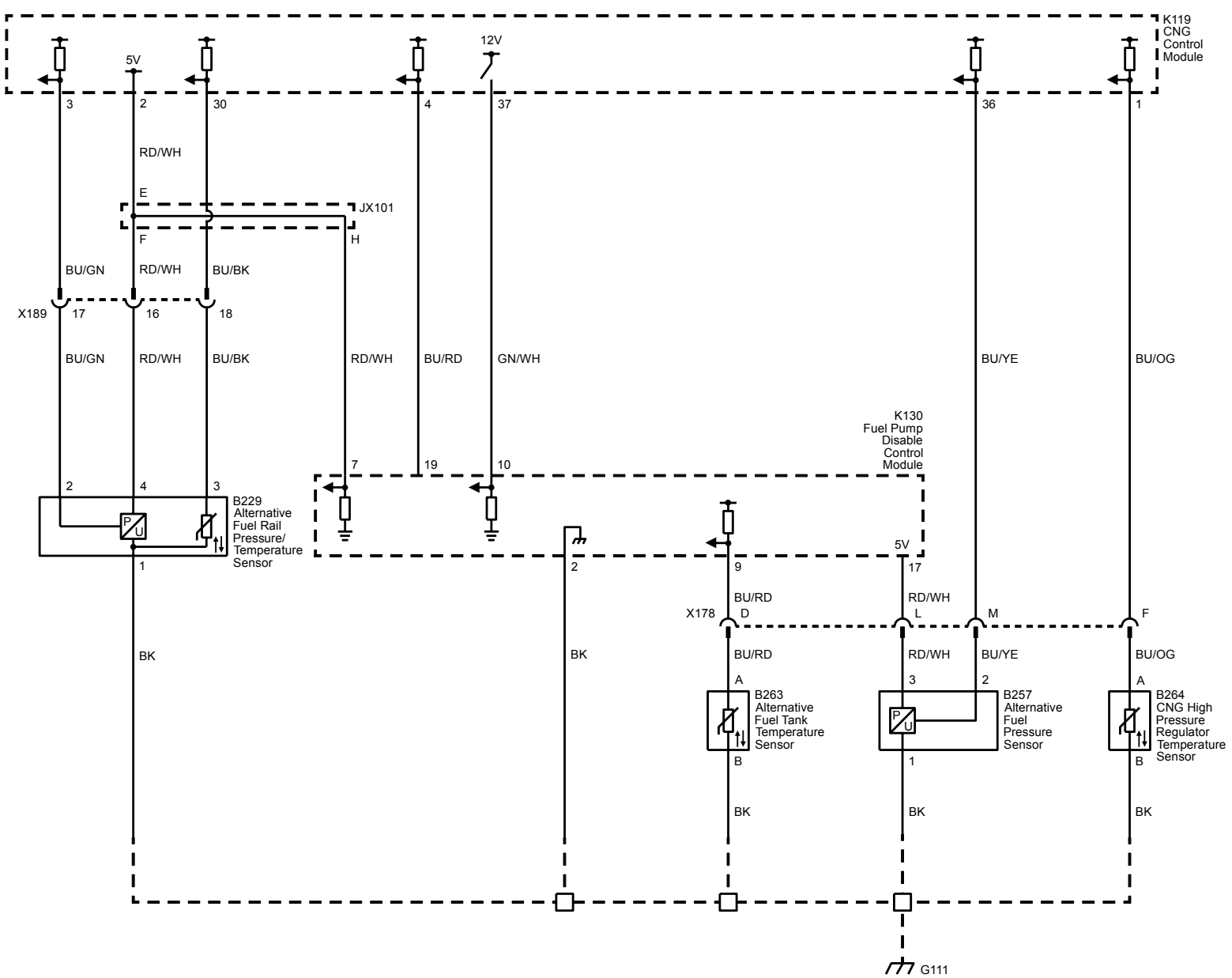

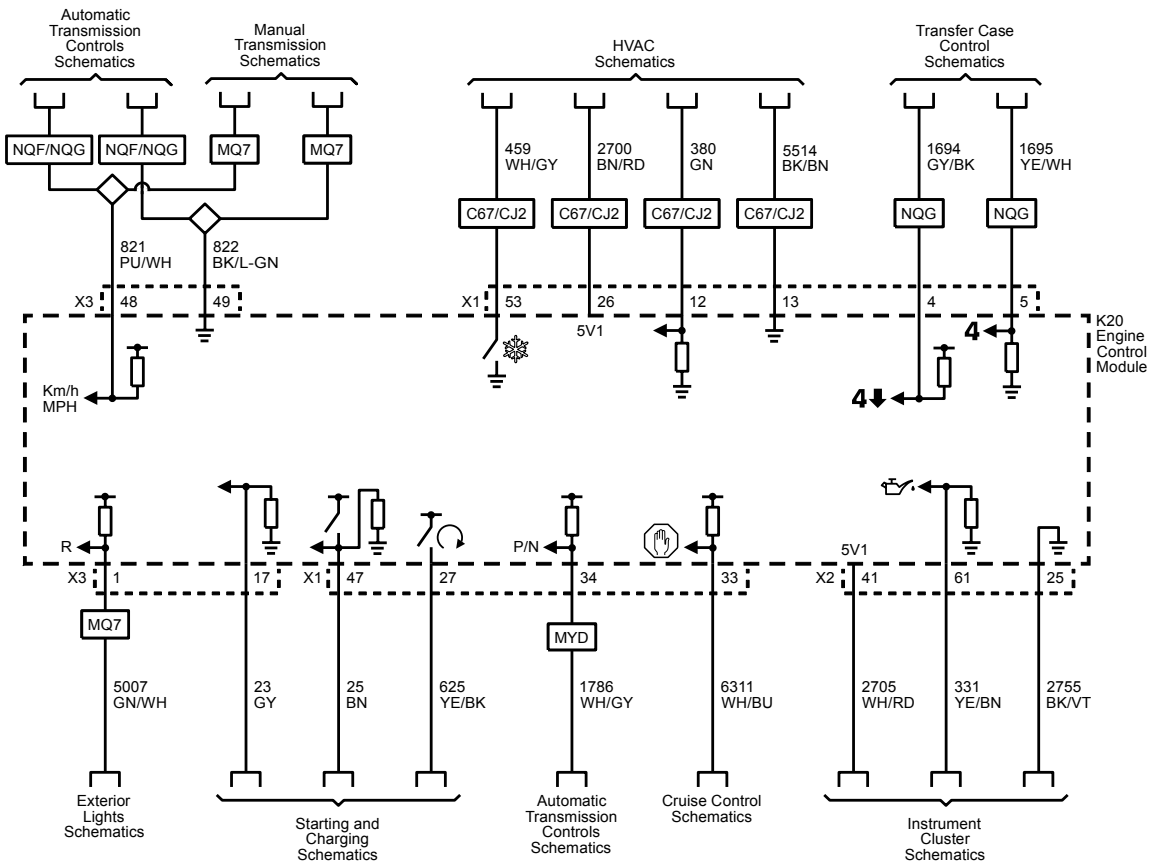
Automatic Transmission Controls Schematics
Manual Transmission Schematics
HVAC Schematics
Transfer Case Control Schematics
NQF/NQG
NQF/NQG
MQ7
MQ7
459 WH/GY
2700 BN/RD
380 GN
5514 BK/BN
1694 GY/BK
1695 YE/WH
C67/CJ2
C67/CJ2
C67/CJ2
C67/CJ2
NQG
NQG
821 PU/WH
822 BK/L-GN
X3
48
49
X1
53
26
12
13
4
5
5V1
4
4
K20 Engine Control Module
Km/h MPH
R
X3
1
17
X1
47
27
P/N
34
33
5V1
X2
41
61
25
MQ7
MYD
5007 GN/WH
23 GY
25 BN
625 YE/BK
1786 WH/GY
6311 WH/BU
2705 WH/RD
331 YE/BN
2755 BK/VT
Exterior Lights Schematics
Starting and Charging Schematics
Automatic Transmission Controls Schematics
Cruise Control Schematics
Instrument Cluster Schematics

# Description and Operation

## Fast Idle System Description

### Fast Idle

Fast Idle (UF3) is available on heavy duty engines equipped with cruise control.  The purpose of fast idle is to increase engine idle speed.  The system is controlled through the steering wheel mounted cruise control switches. Upon activation a signal is sent through the body control module (BCM) to the engine control module (ECM) commanding an increase in engine speed.

The instrument panel will indicate the fast idle system is active by displaying a message across the driver information center (DIC).

### Fast Idle Enable and Disable

To enable the fast idle system, perform the following procedure:

1. Engine running.
2. Park brake set.
3. Transmission shifter in P (park) or N (neutral).
4. Press and release the cruise control ON/OFF button.
5. Press and release the cruise control SET button.

When the procedure is followed the engine idle speed will increase to approximately 1,200 RPM.

The manual fast idle system will be disabled if any of the following procedures are performed:

- Brake applied
- Cruise control CANCEL, ON/OFF, or SET buttons depressed
- Park brake released
- Accelerator pedal depressed more than 25%
- Clutch applied
- Ignition switch turned to the LOCK/OFF position

# Engine Controls and Fuel - 5.3L (L83) or 6.2L (L86)

## Schematic and Routing Diagrams

# Engine Controls and Fuel - 6.6L (LML)

## Schematic and Routing Diagrams

### Engine Controls Schematics

#### Power, Ground, Serial Data, and MIL

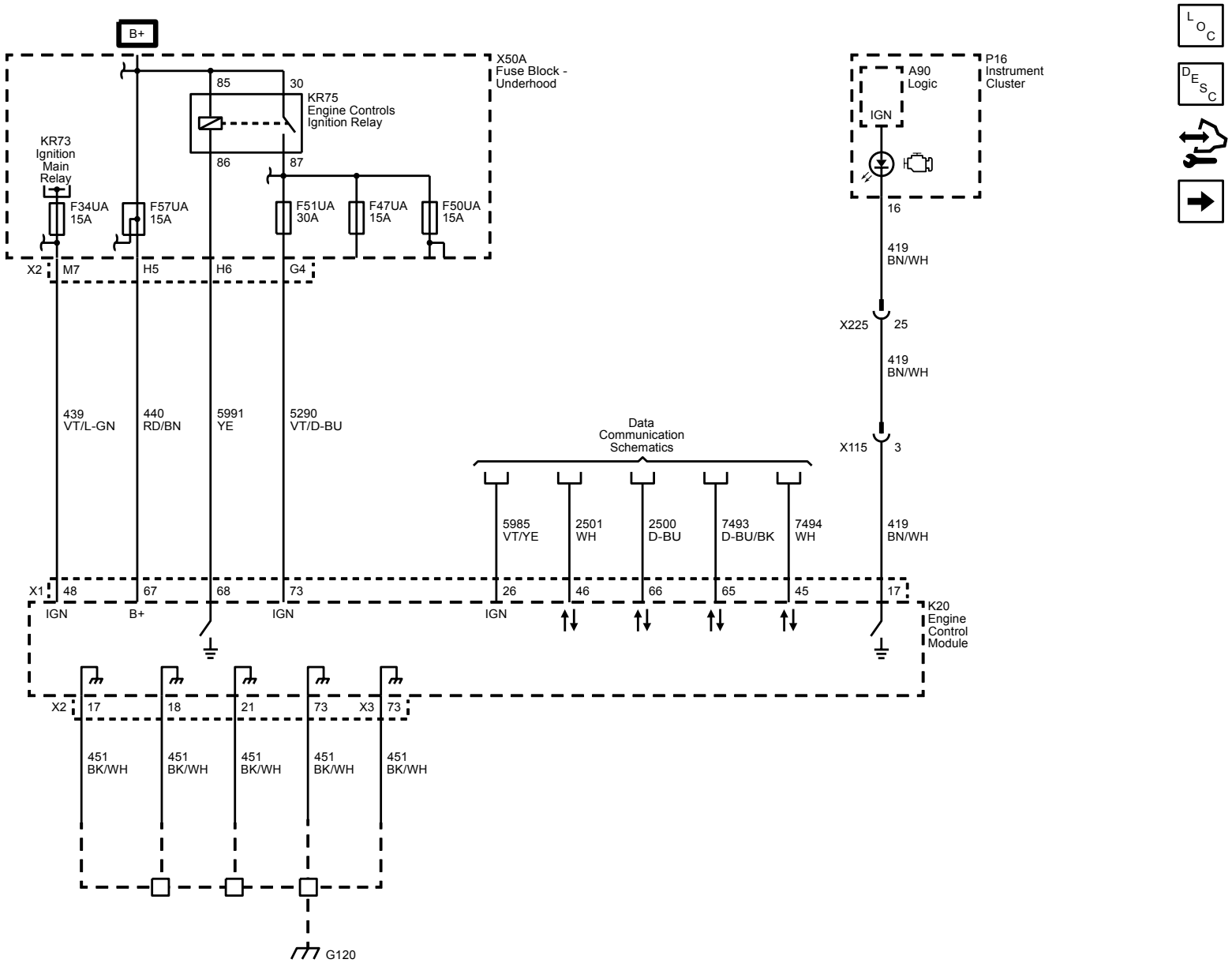

# 5V1 and Low Reference Bus (1 of 3)

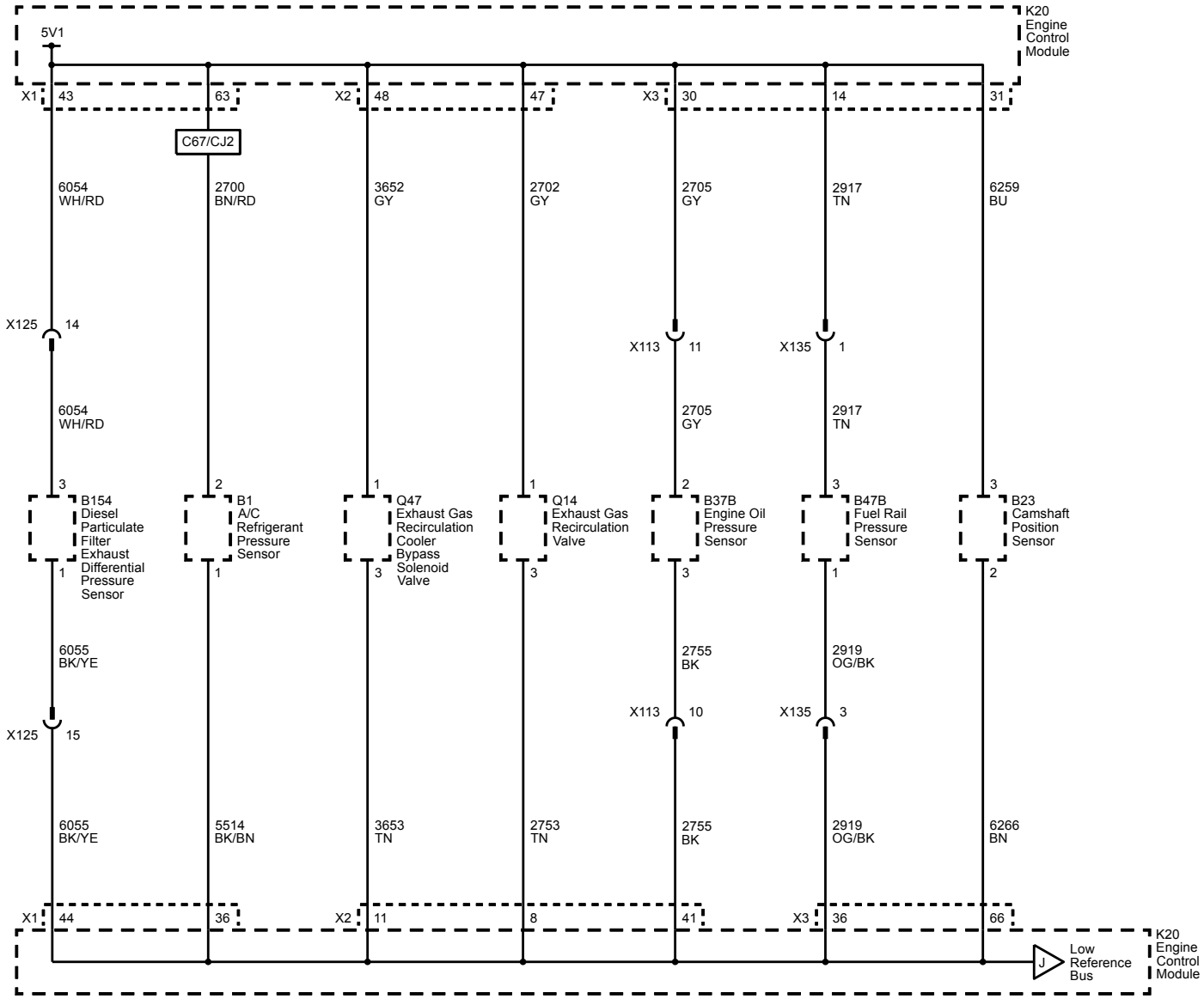

## 5V2, 5V3 and 5V4, and Low Reference Bus (2 of 3)

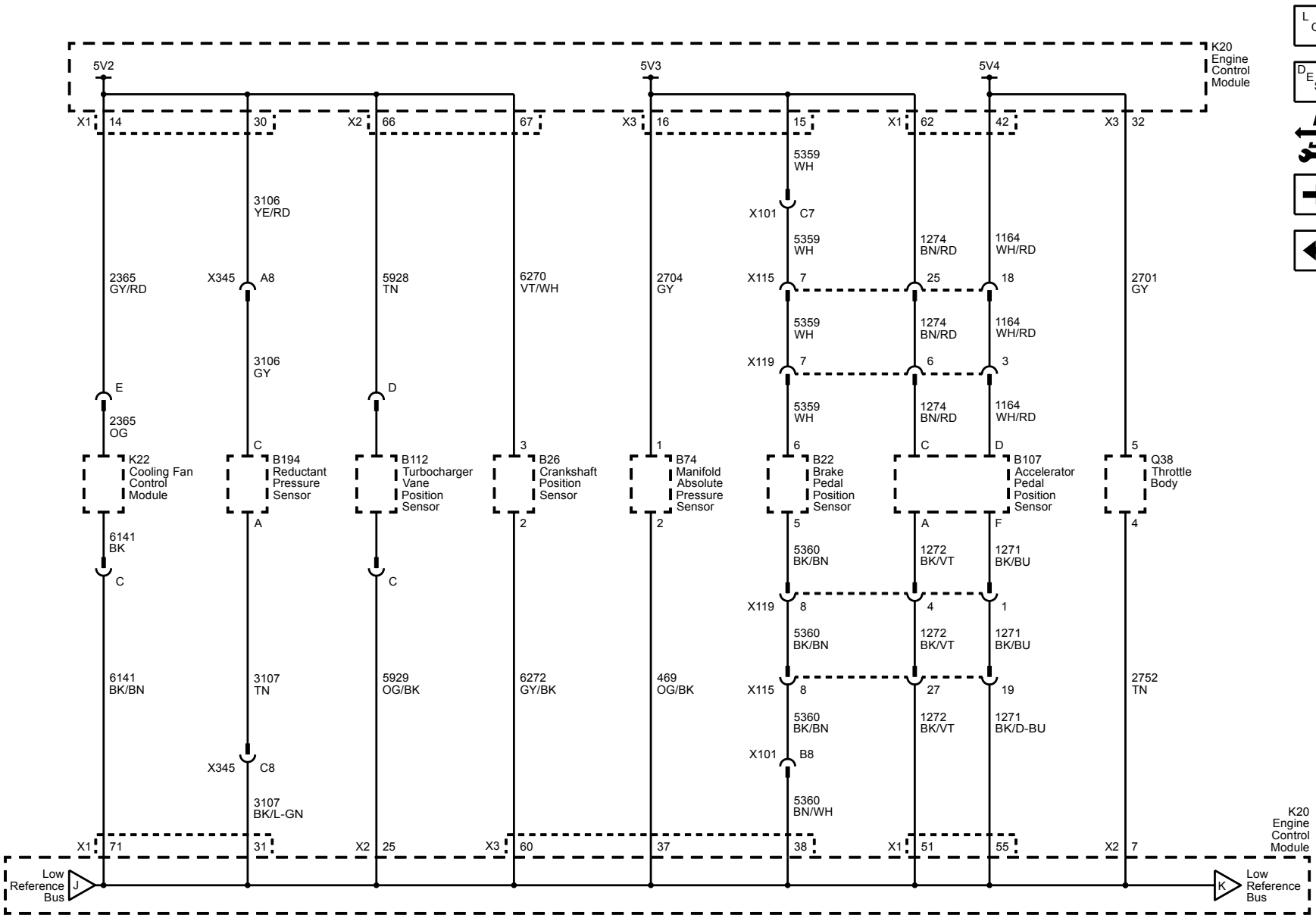

## Low Reference Bus (3 of 3)

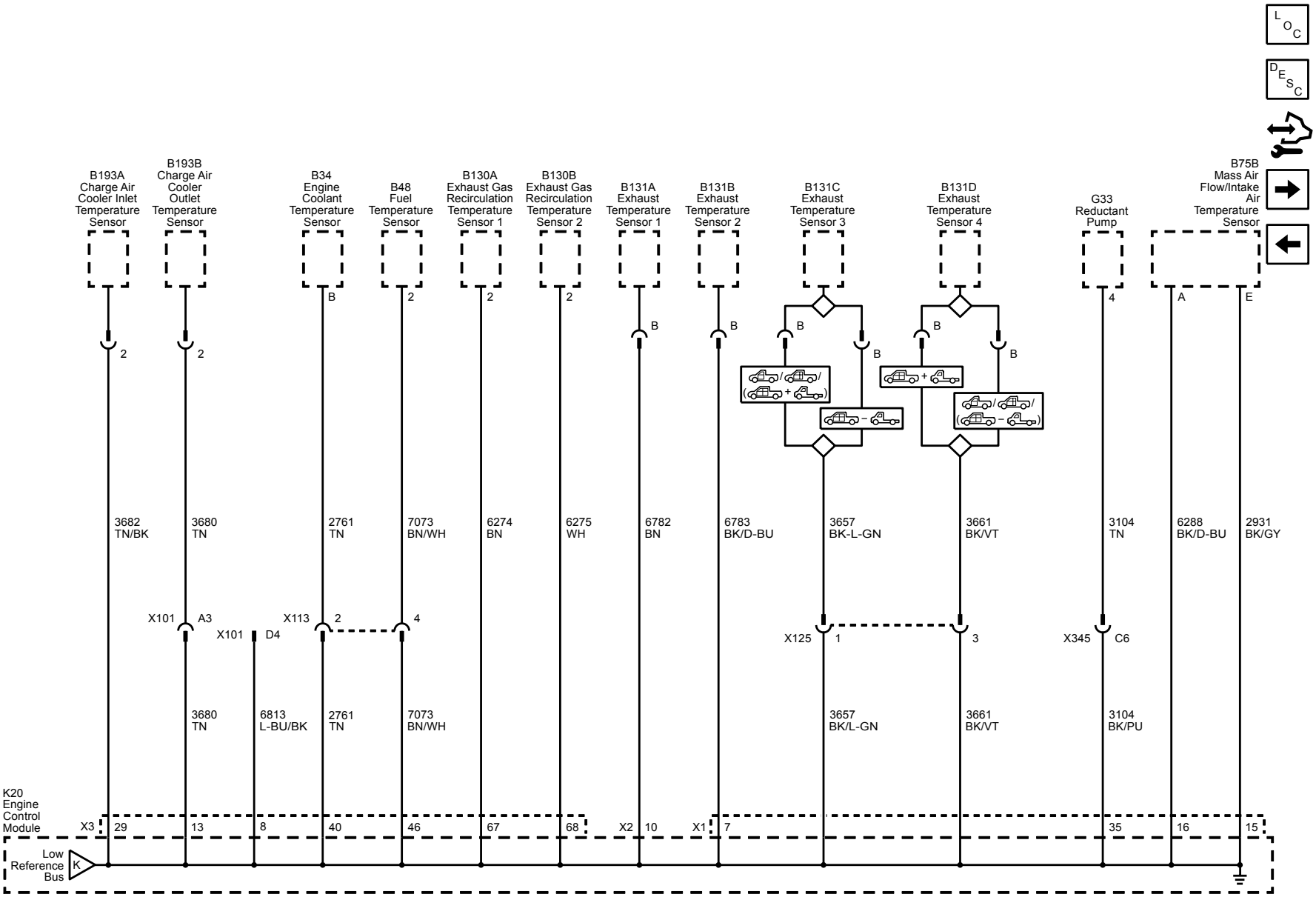

# Engine Data Sensors - Pressure and Temperature (1 of 2)

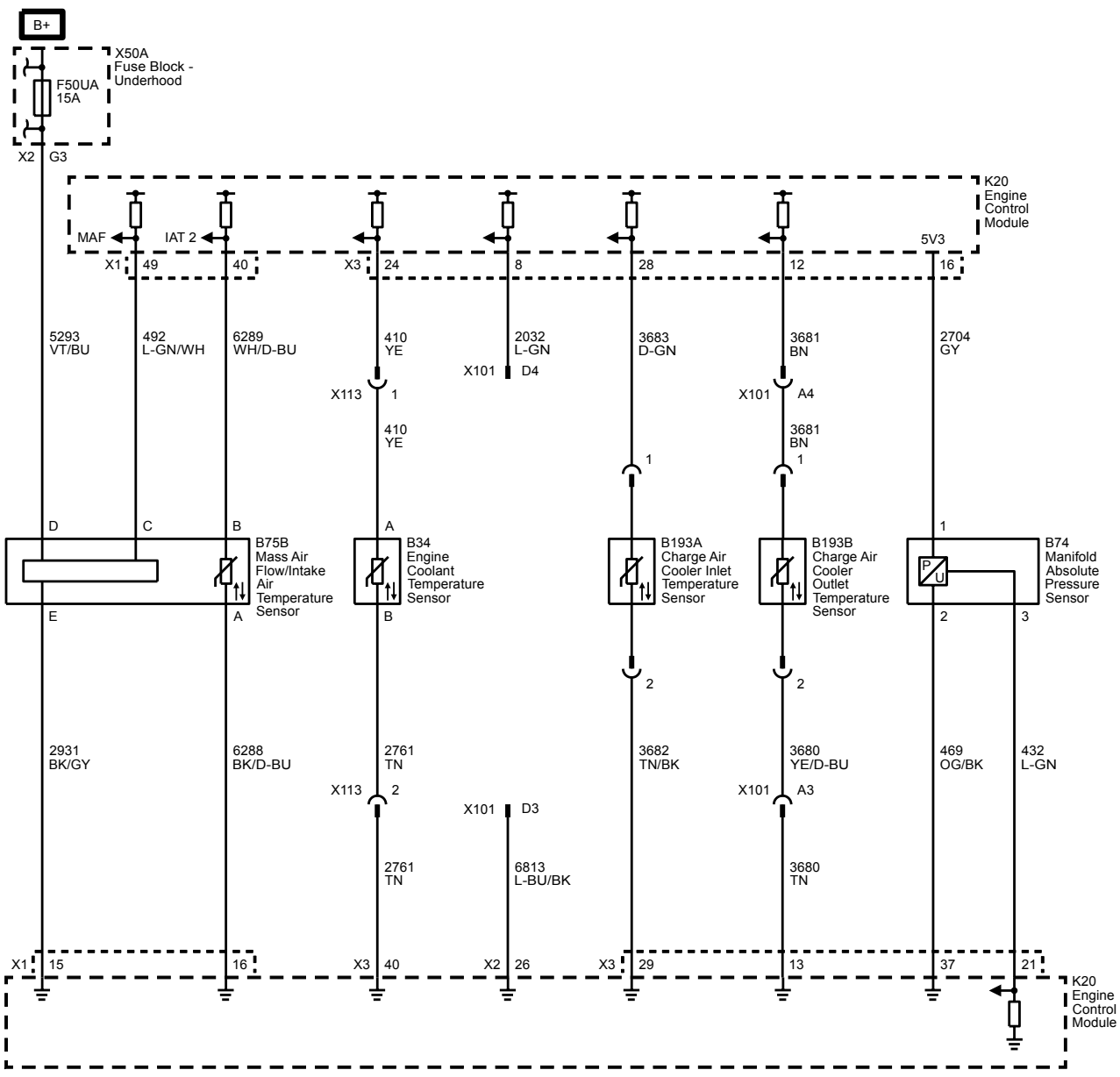

# Engine Data Sensors - Pressure and Temperature (2 of 2)

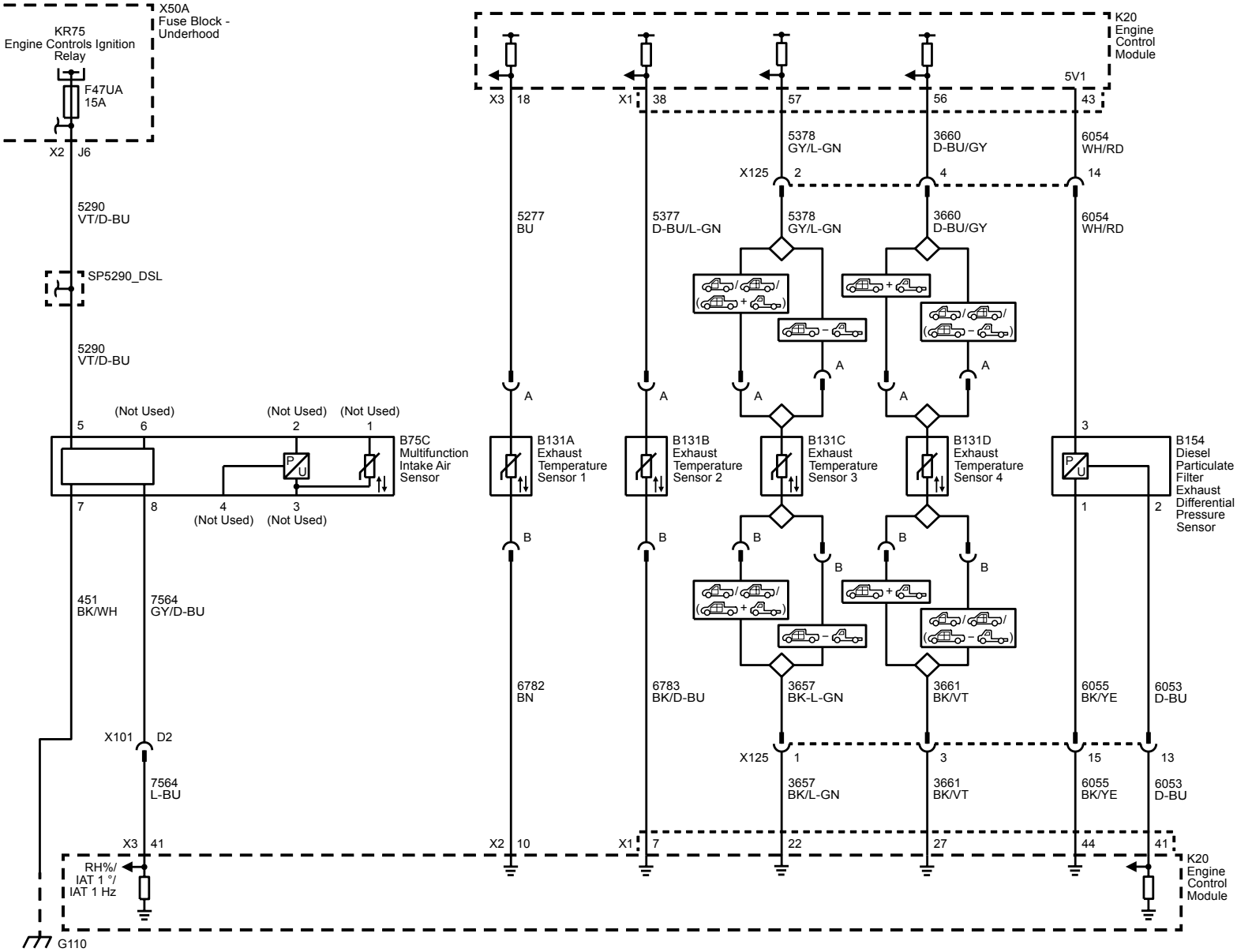

# Engine Data Sensors - EGR and Turbocharger Controls

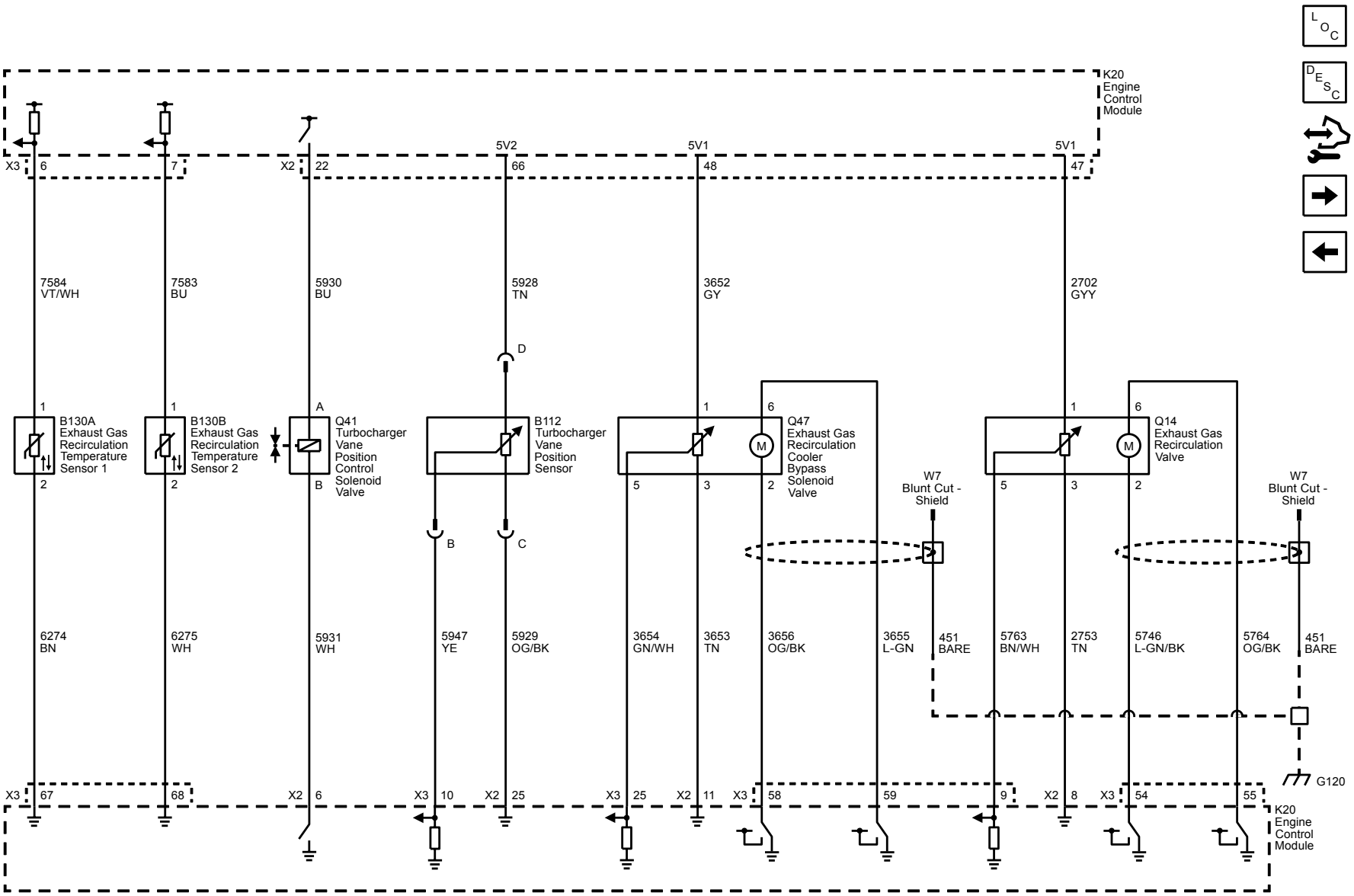

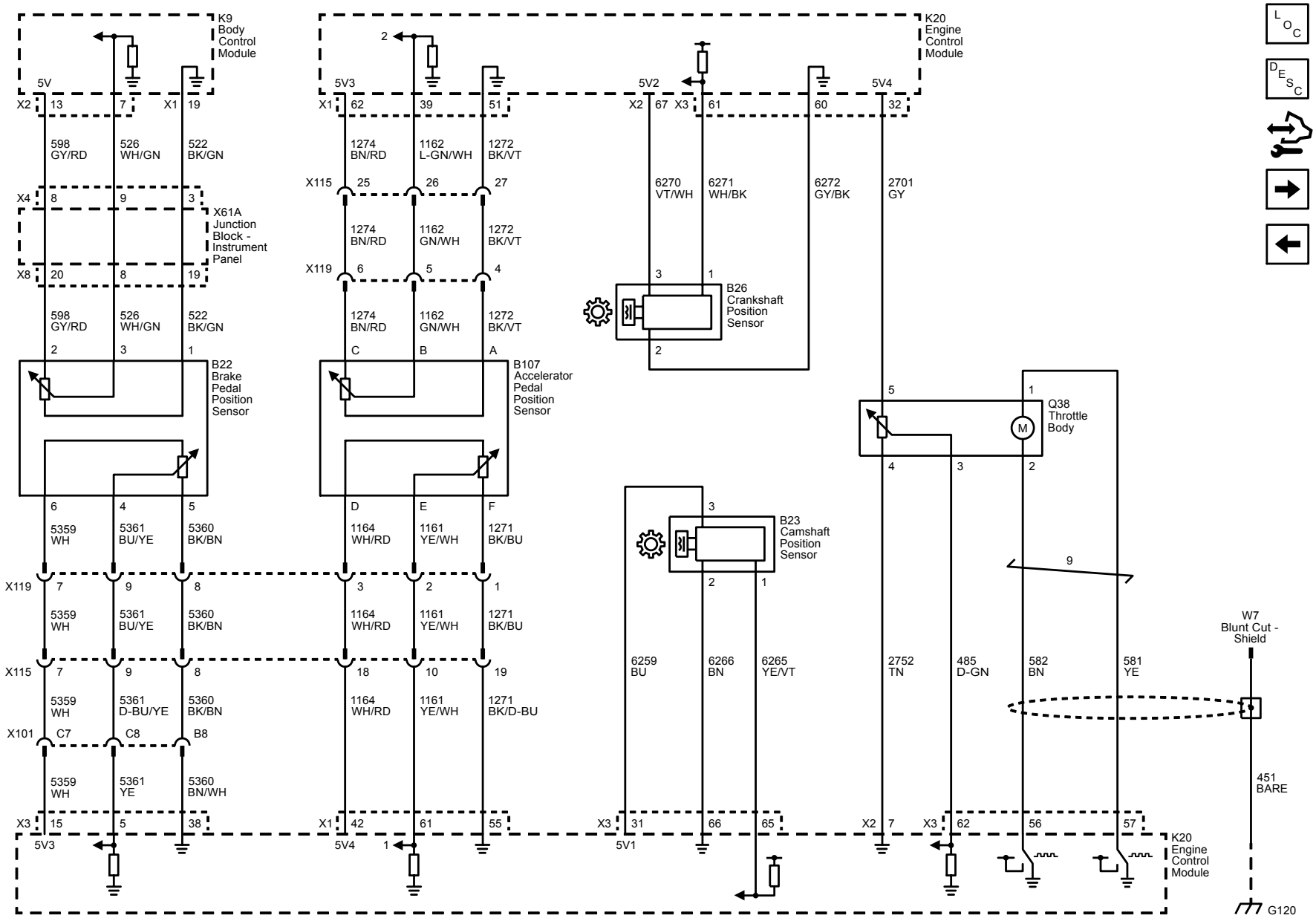
K9 Body Control Module
5V
X2 13 7 X1 19
598 GY/RD
526 WH/GN
522 BK/GN
X4 8 9 3
X61A Junction Block - Instrument Panel
X8 20 8 19
598 GY/RD
526 WH/GN
522 BK/GN
2 3 1
B22 Brake Pedal Position Sensor
6 4 5
5359 WH
5361 BU/YE
5360 BK/BN
X119 7 9 8
5359 WH
5361 BU/YE
5360 BK/BN
X115 7 9 8
5359 WH
5361 D-BU/YE
5360 BK/BN
X101 C7 C8 B8
5359 WH
5361 YE
5360 BN/WH
X3 15 5 38
5V3
K20 Engine Control Module
2
5V3
X1 62 39 51
1274 BN/RD
1162 L-GN/WH
1272 BK/VT
X115 25 26 27
1274 BN/RD
1162 GN/WH
1272 BK/VT
X119 6 5 4
1274 BN/RD
1162 GN/WH
1272 BK/VT
C B A
B107 Accelerator Pedal Position Sensor
D E F
1164 WH/RD
1161 YE/WH
1271 BK/BU
3 2 1
1164 WH/RD
1161 YE/WH
1271 BK/BU
18 10 19
1164 WH/RD
1161 YE/WH
1271 BK/D-BU
X1 42 61 55
5V4 1
K20 Engine Control Module
5V2
X2 67 X3 61
6270 VT/WH
6271 WH/BK
3 1
B26 Crankshaft Position Sensor
2
5V4
60 32
6272 GY/BK
2701 GY
3
B23 Camshaft Position Sensor
2 1
6259 BU
6266 BN
6265 YE/VT
X3 31 66 65
5V1
K20 Engine Control Module
5
1
Q38 Throttle Body
M
4 3 2
9
2752 TN
485 D-GN
582 BN
581 YE
X2 7
X3 62 56 57
K20 Engine Control Module
W7 Blunt Cut - Shield
451 BARE
G120

# Engine Data Sensors - Glow Plug Controls and Intake Air Heater

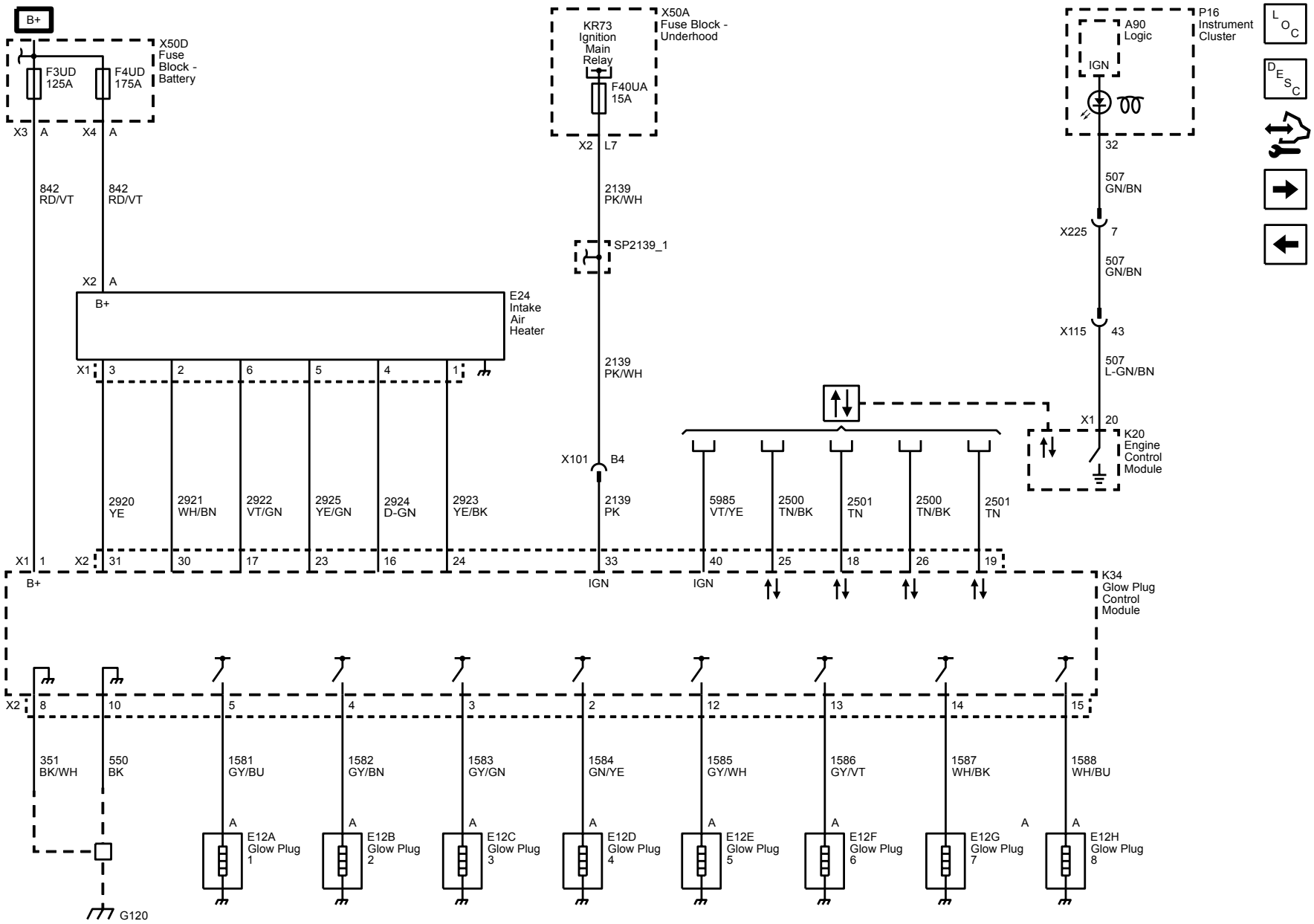

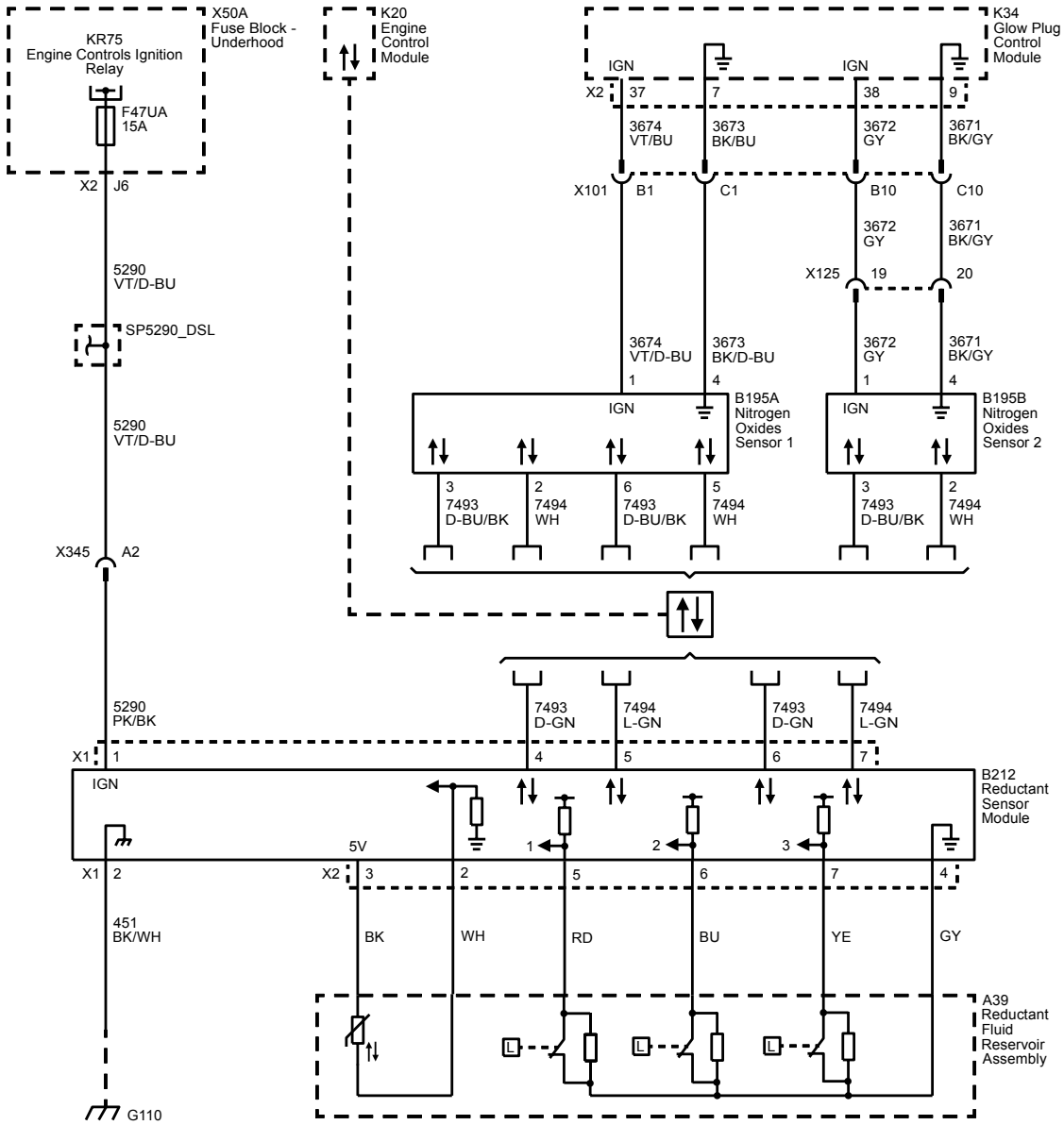
X50A
Fuse Block - Underhood
KR75
Engine Controls Ignition Relay
F47UA
15A
X2 J6
5290
VT/D-BU
SP5290_DSL
5290
VT/D-BU
X345 A2
K20
Engine Control Module
K34
Glow Plug Control Module
IGN
IGN
X2 37 7 38 9
3674
VT/BU
3673
BK/BU
3672
GY
3671
BK/GY
X101 B1 C1 B10 C10
3672
GY
3671
BK/GY
X125 19 20
3674
VT/D-BU
3673
BK/D-BU
3672
GY
3671
BK/GY
1 4 1 4
IGN
IGN
B195A
Nitrogen Oxides Sensor 1
B195B
Nitrogen Oxides Sensor 2
3 7493 D-BU/BK
2 7494 WH
6 7493 D-BU/BK
5 7494 WH
3 7493 D-BU/BK
2 7494 WH
7493
D-GN
7494
L-GN
7493
D-GN
7494
L-GN
5290
PK/BK
X1 1 4 5 6 7
IGN
B212
Reductant Sensor Module
5V
1 2 3
X1 2 X2 3 2 5 6 7 4
451
BK/WH
BK
WH
RD
BU
YE
GY
A39
Reductant Fluid Reservoir Assembly
G110

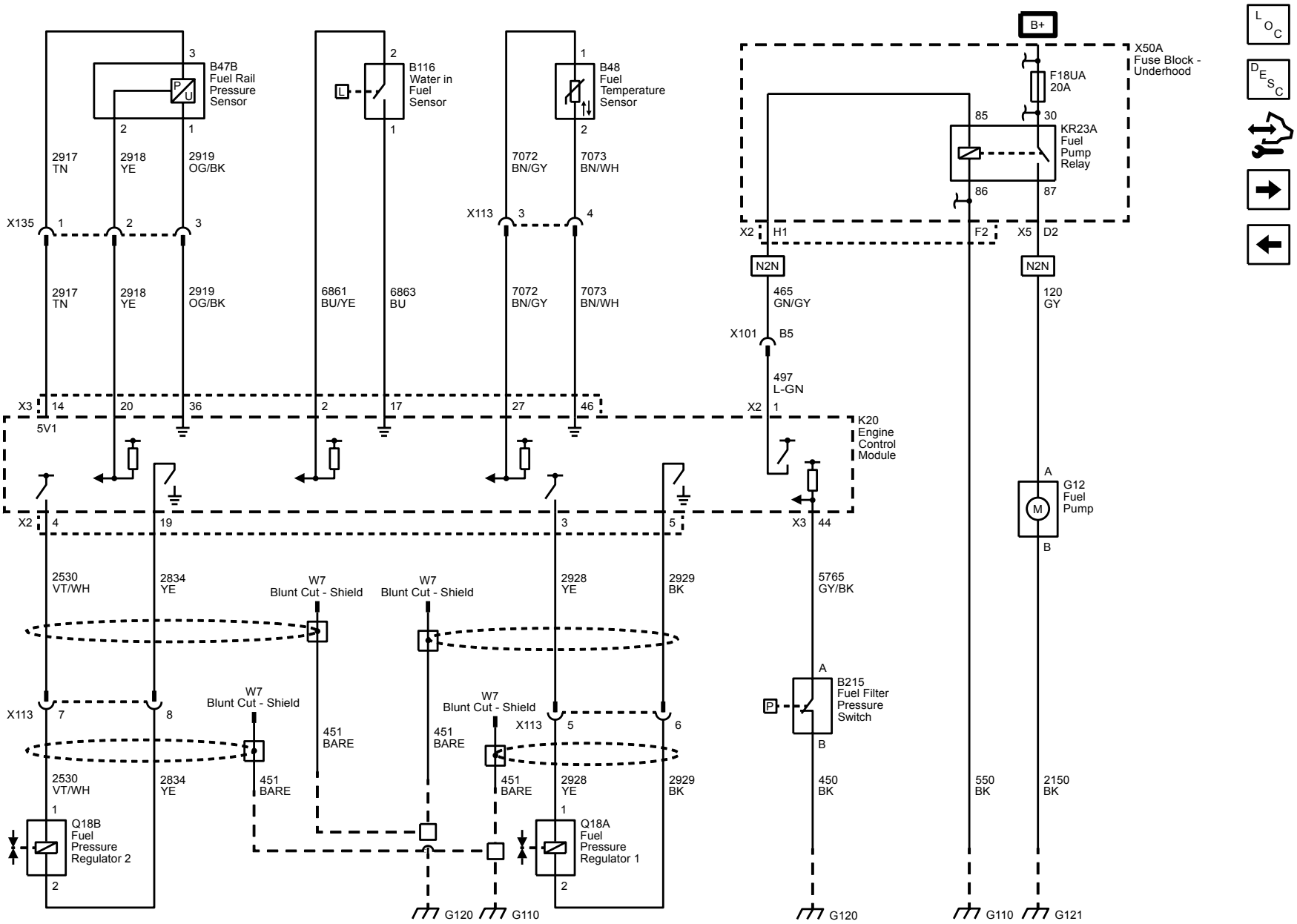
B47B
Fuel Rail
Pressure
Sensor
B116
Water in
Fuel
Sensor
B48
Fuel
Temperature
Sensor
X50A
Fuse Block -
Underhood
F18UA
20A
KR23A
Fuel
Pump
Relay
B+
2917 TN
2918 YE
2919 OG/BK
6861 BU/YE
6863 BU
7072 BN/GY
7073 BN/WH
465 GN/GY
120 GY
497 L-GN
X135
X113
X101
X3
X2
X5
N2N
5V1
K20
Engine
Control
Module
G12
Fuel
Pump
2530 VT/WH
2834 YE
2928 YE
2929 BK
5765 GY/BK
W7
Blunt Cut - Shield
451 BARE
B215
Fuel Filter
Pressure
Switch
450 BK
550 BK
2150 BK
Q18B
Fuel
Pressure
Regulator 2
Q18A
Fuel
Pressure
Regulator 1
G120
G110
G121

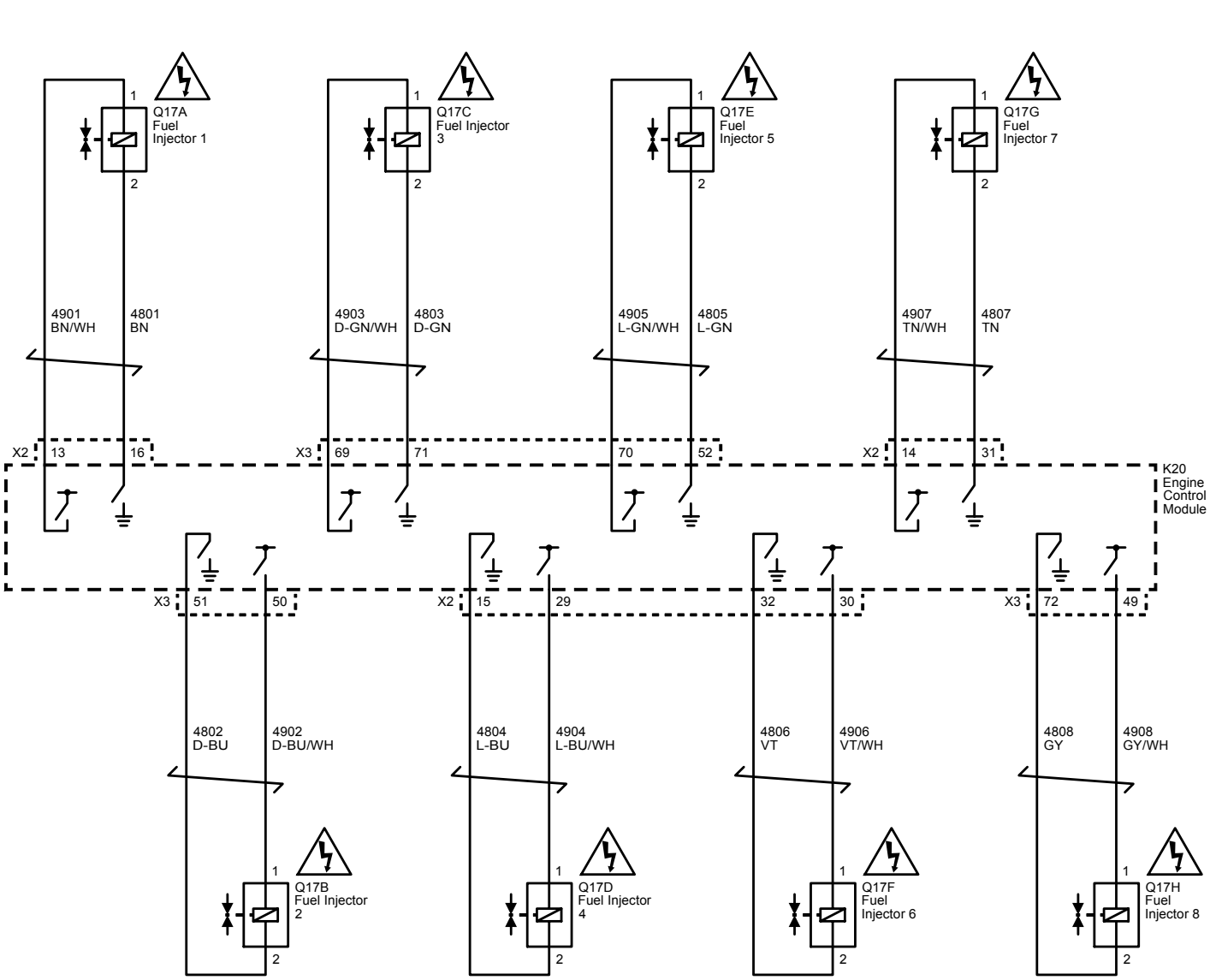
Q17A
Fuel
Injector 1
Q17C
Fuel Injector
3
Q17E
Fuel
Injector 5
Q17G
Fuel
Injector 7
4901
BN/WH
4801
BN
4903
D-GN/WH
4803
D-GN
4905
L-GN/WH
4805
L-GN
4907
TN/WH
4807
TN
X2 13 16
X3 69 71
70 52
X2 14 31
K20
Engine
Control
Module
X3 51 50
X2 15 29
32 30
X3 72 49
4802
D-BU
4902
D-BU/WH
4804
L-BU
4904
L-BU/WH
4806
VT
4906
VT/WH
4808
GY
4908
GY/WH
Q17B
Fuel Injector
2
Q17D
Fuel Injector
4
Q17F
Fuel
Injector 6
Q17H
Fuel
Injector 8

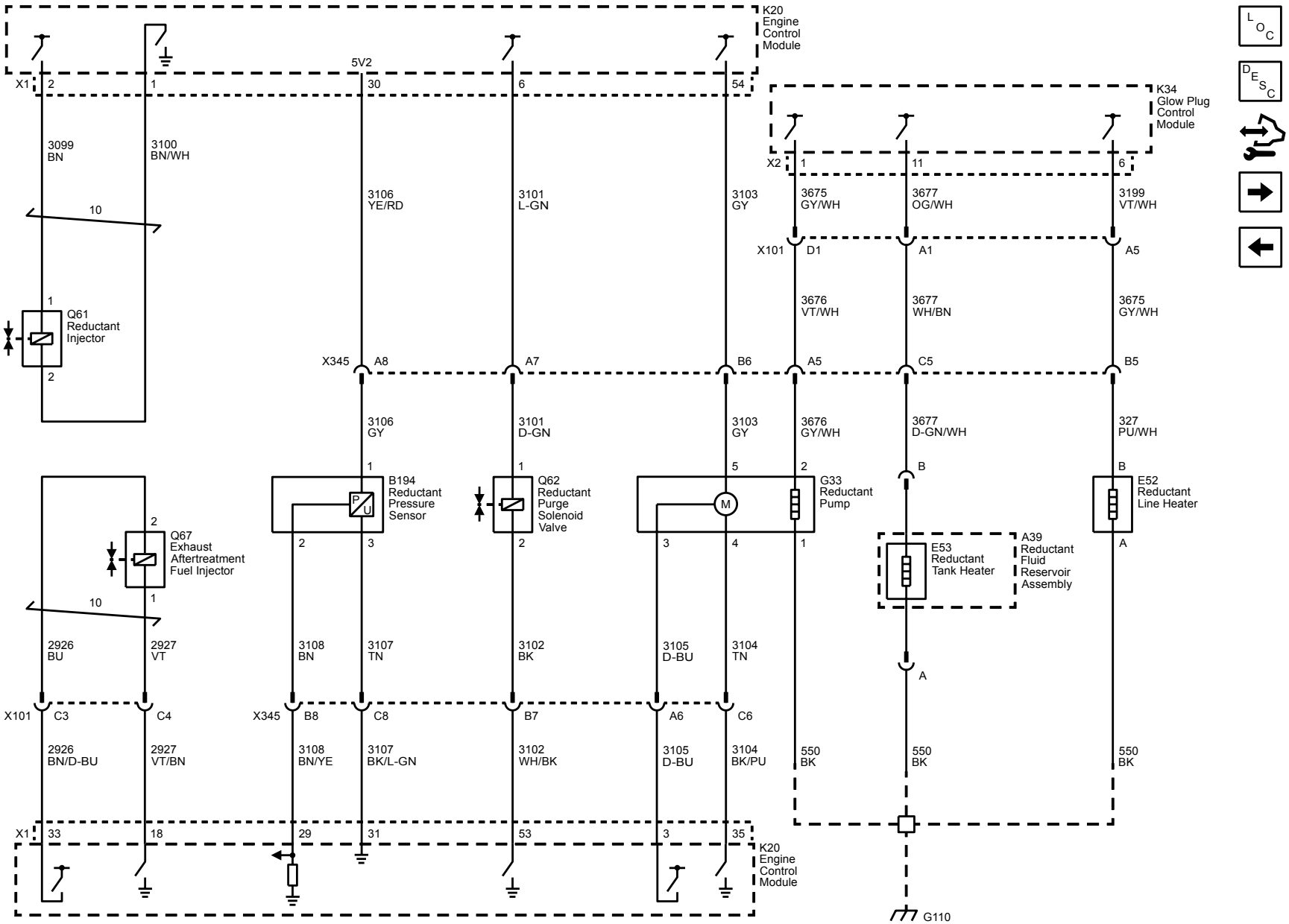
K20 Engine Control Module
X1
2
1
5V2
30
6
54
3099 BN
3100 BN/WH
10
1
Q61 Reductant Injector
2
3106 YE/RD
3101 L-GN
3103 GY
K34 Glow Plug Control Module
X2
1
11
6
3675 GY/WH
3677 OG/WH
3199 VT/WH
X101
D1
A1
A5
3676 VT/WH
3677 WH/BN
3675 GY/WH
X345
A8
A7
B6
A5
C5
B5
3106 GY
3101 D-GN
3103 GY
3676 GY/WH
3677 D-GN/WH
327 PU/WH
1
1
5
2
B
B
B194 Reductant Pressure Sensor
Q62 Reductant Purge Solenoid Valve
G33 Reductant Pump
E52 Reductant Line Heater
2
3
2
3
4
1
A
E53 Reductant Tank Heater
A39 Reductant Fluid Reservoir Assembly
2
Q67 Exhaust Aftertreatment Fuel Injector
1
10
2926 BU
2927 VT
3108 BN
3107 TN
3102 BK
3105 D-BU
3104 TN
A
X101
C3
C4
X345
B8
C8
B7
A6
C6
2926 BN/D-BU
2927 VT/BN
3108 BN/YE
3107 BK/L-GN
3102 WH/BK
3105 D-BU
3104 BK/PU
550 BK
550 BK
550 BK
X1
33
18
29
31
53
3
35
K20 Engine Control Module
G110

## Controlled/Monitored Subsystem References

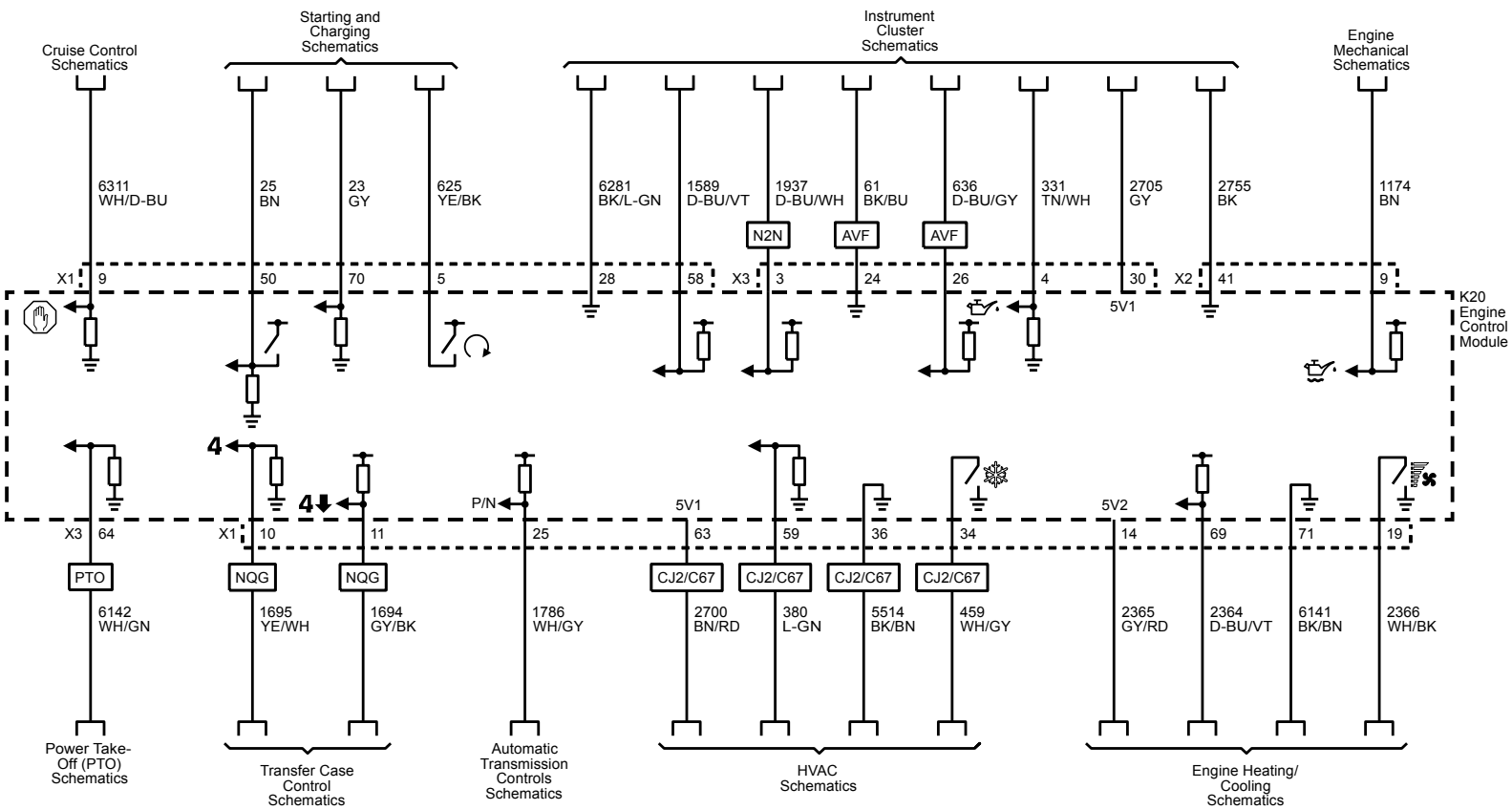

# HVAC

## HVAC - Automatic

### Schematic and Routing Diagrams

#### HVAC Schematics

##### Power, Ground, Serial Data and Controls

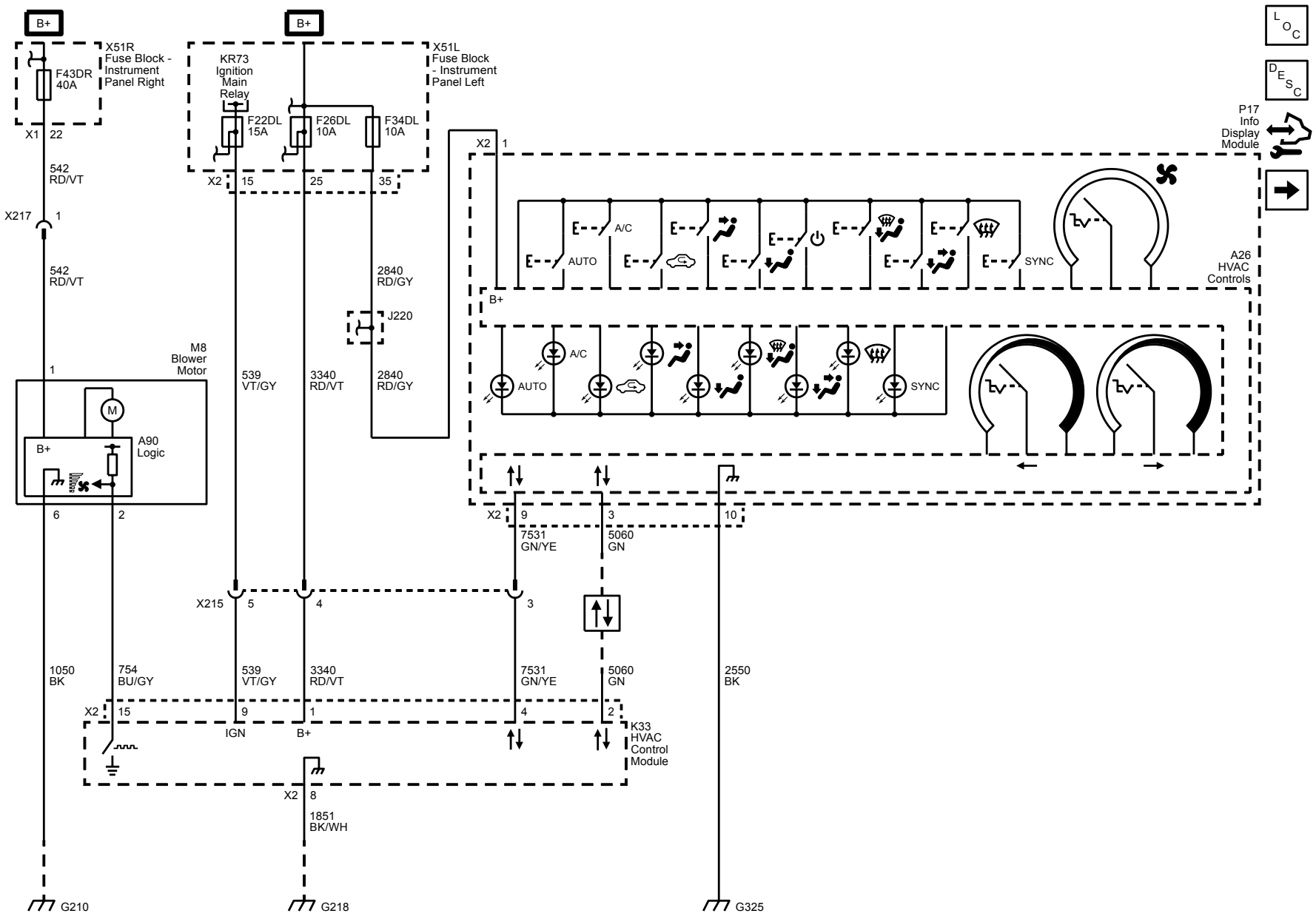

# Ambient Light/Sunload Sensor and Mode Doors

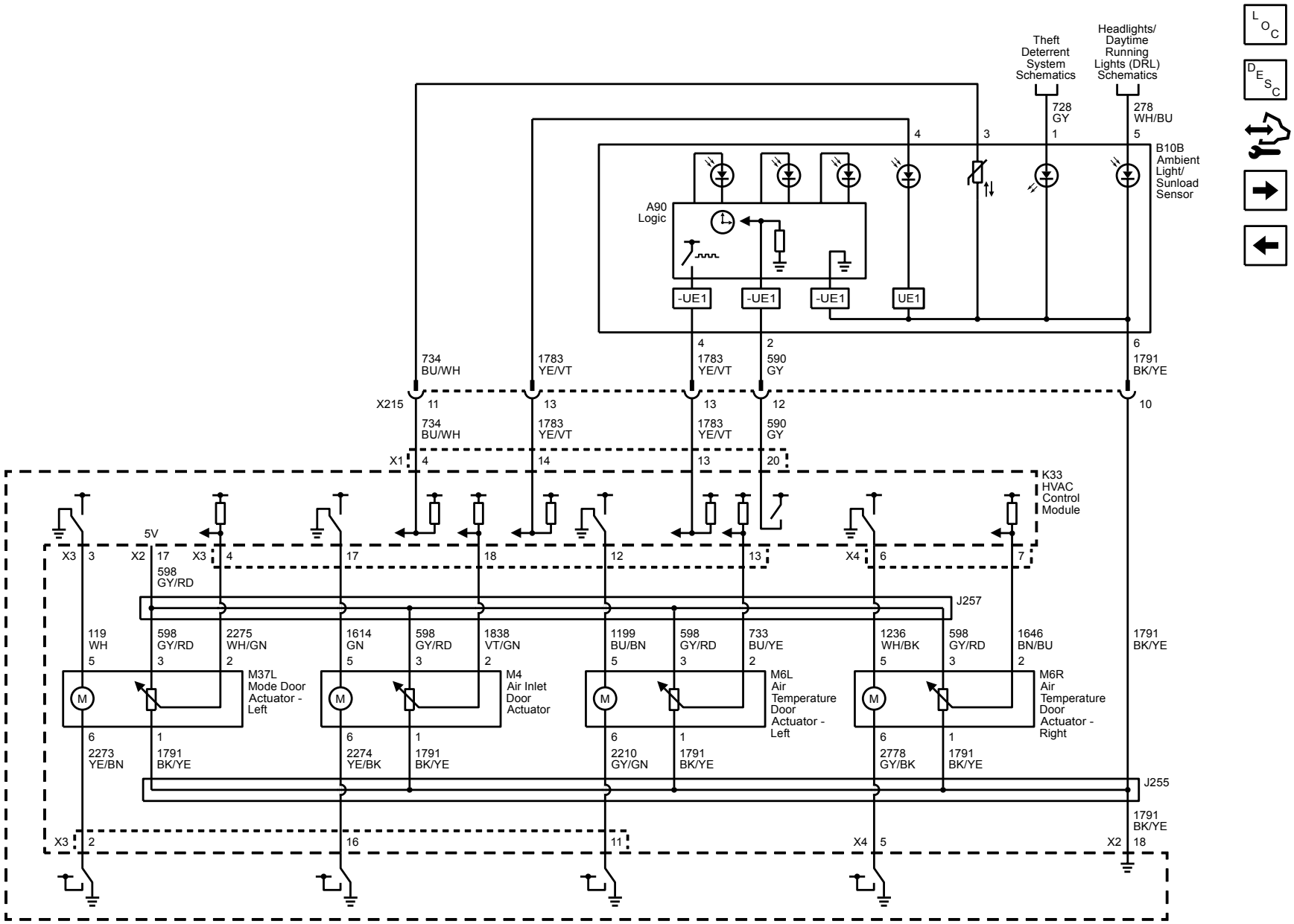

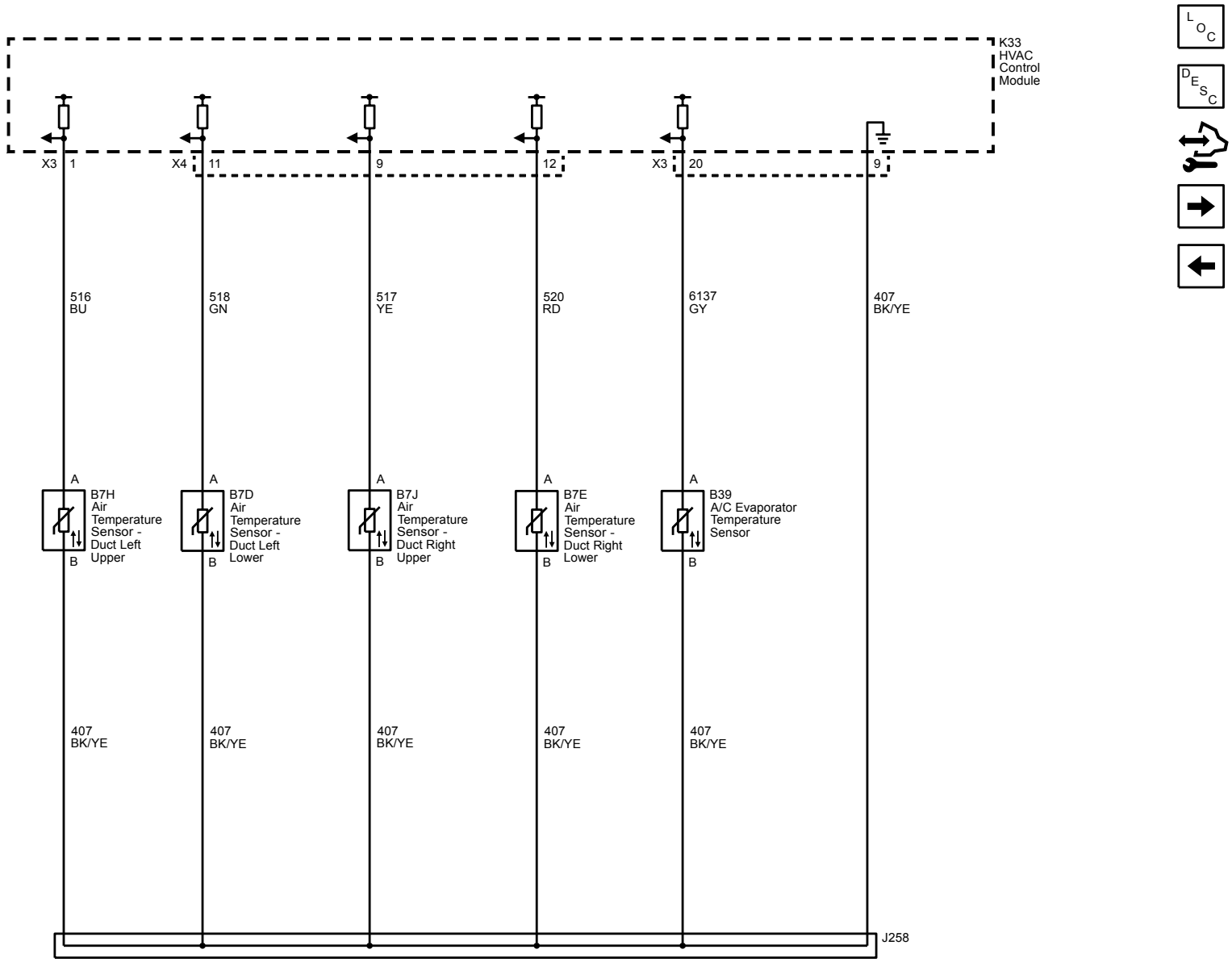
K33
HVAC
Control
Module
X3 1
X4 11
9
12
X3 20
9
516
BU
518
GN
517
YE
520
RD
6137
GY
407
BK/YE
A
B7H
Air
Temperature
Sensor -
Duct Left
Upper
B
A
B7D
Air
Temperature
Sensor -
Duct Left
Lower
B
A
B7J
Air
Temperature
Sensor -
Duct Right
Upper
B
A
B7E
Air
Temperature
Sensor -
Duct Right
Lower
B
A
B39
A/C Evaporator
Temperature
Sensor
B
407
BK/YE
407
BK/YE
407
BK/YE
407
BK/YE
407
BK/YE
J258

# A/C Compressor Controls

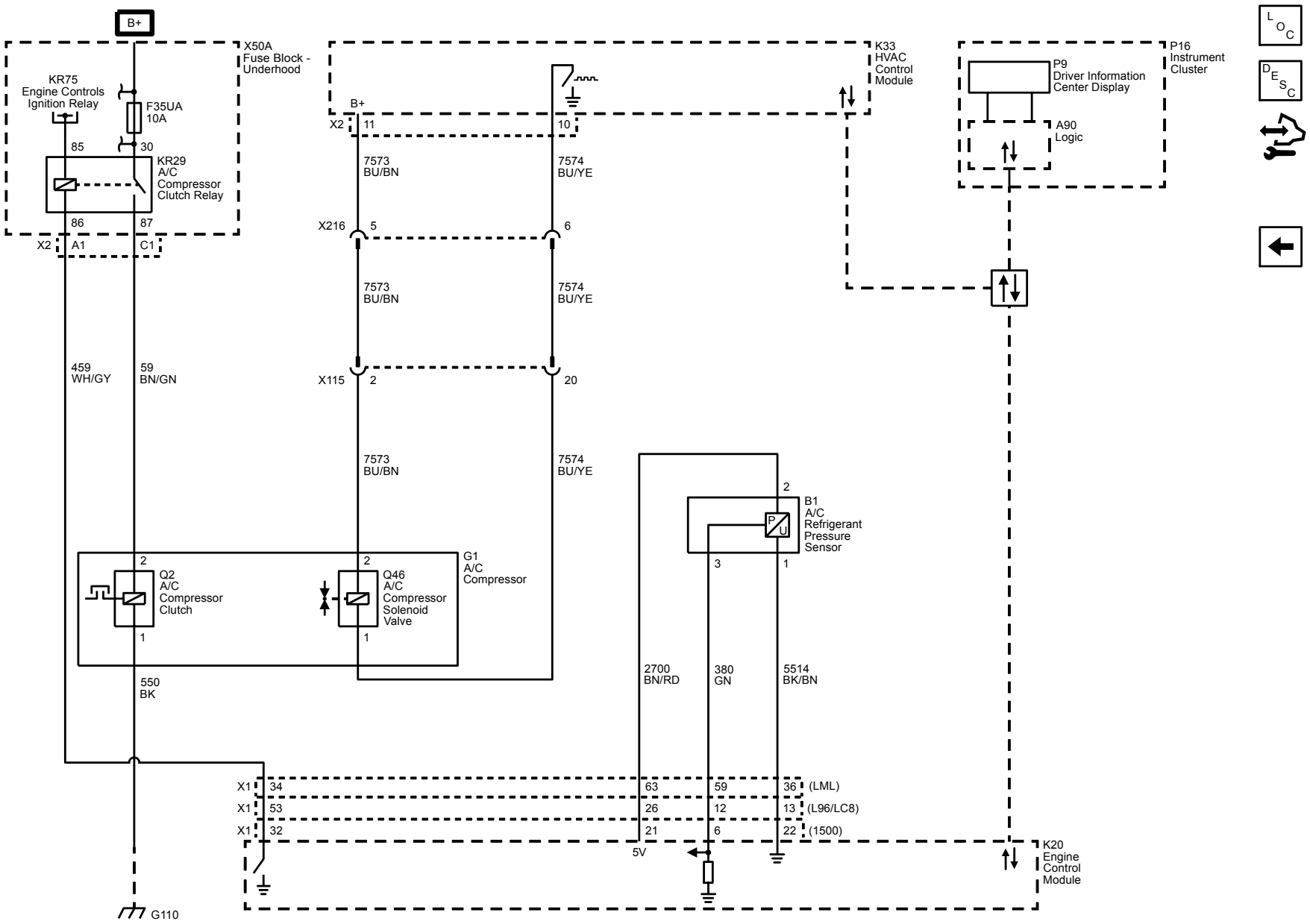

# HVAC - Manual

## Schematic and Routing Diagrams

### HVAC Schematics

#### Power, Ground, Serial Data and Controls

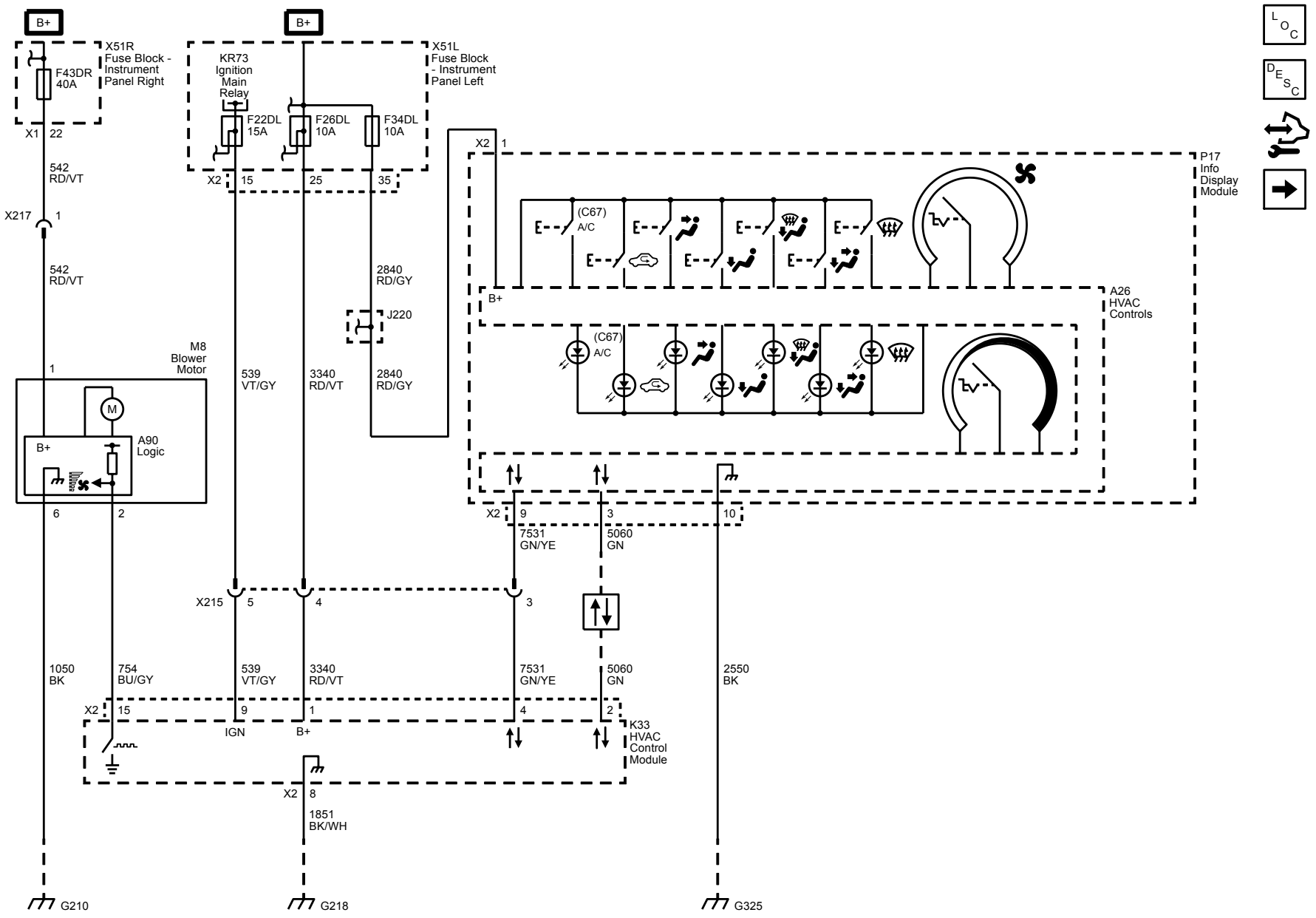

# Ambient Light/Sunload Sensor and Mode Doors

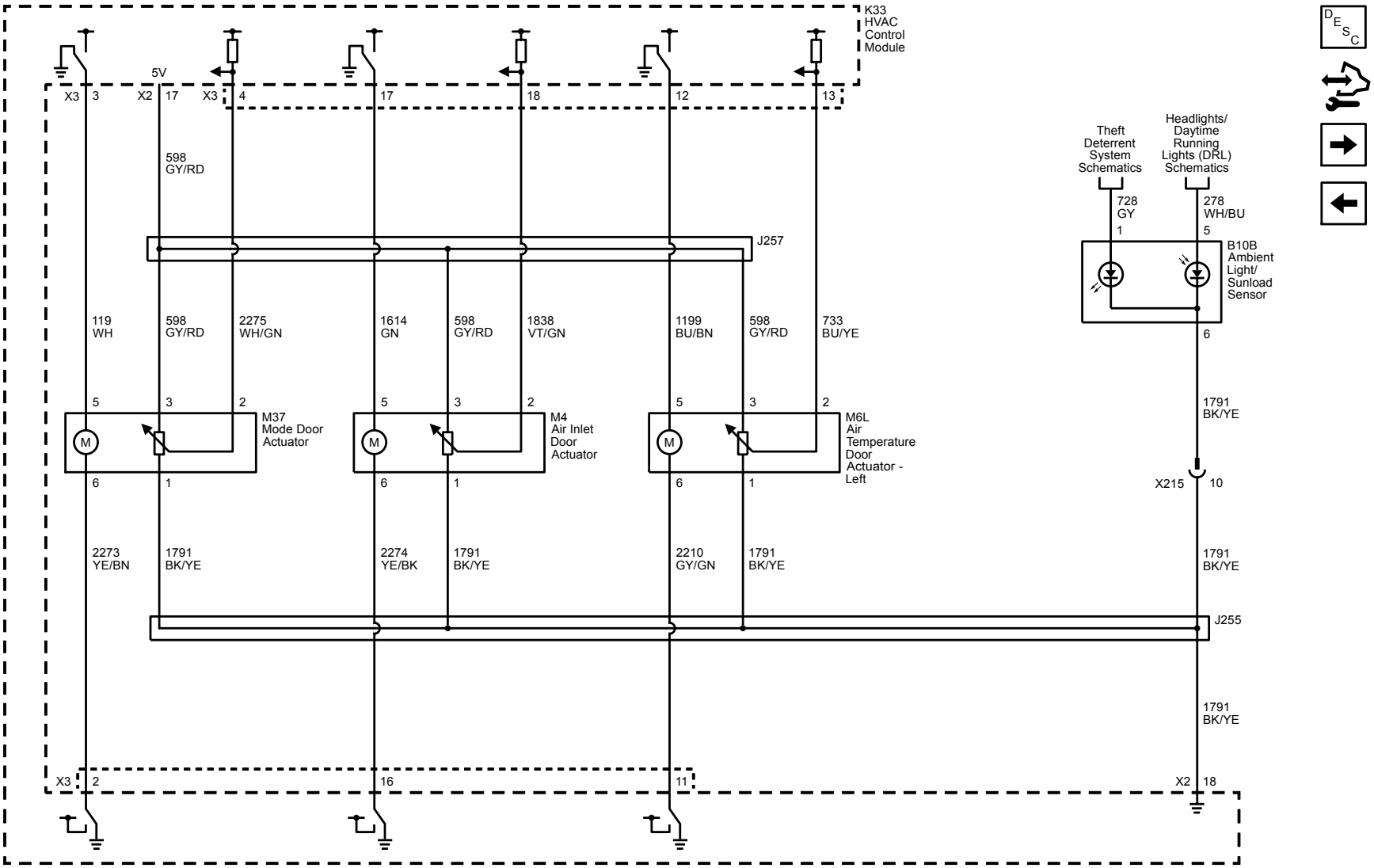

# A/C Compressor Controls

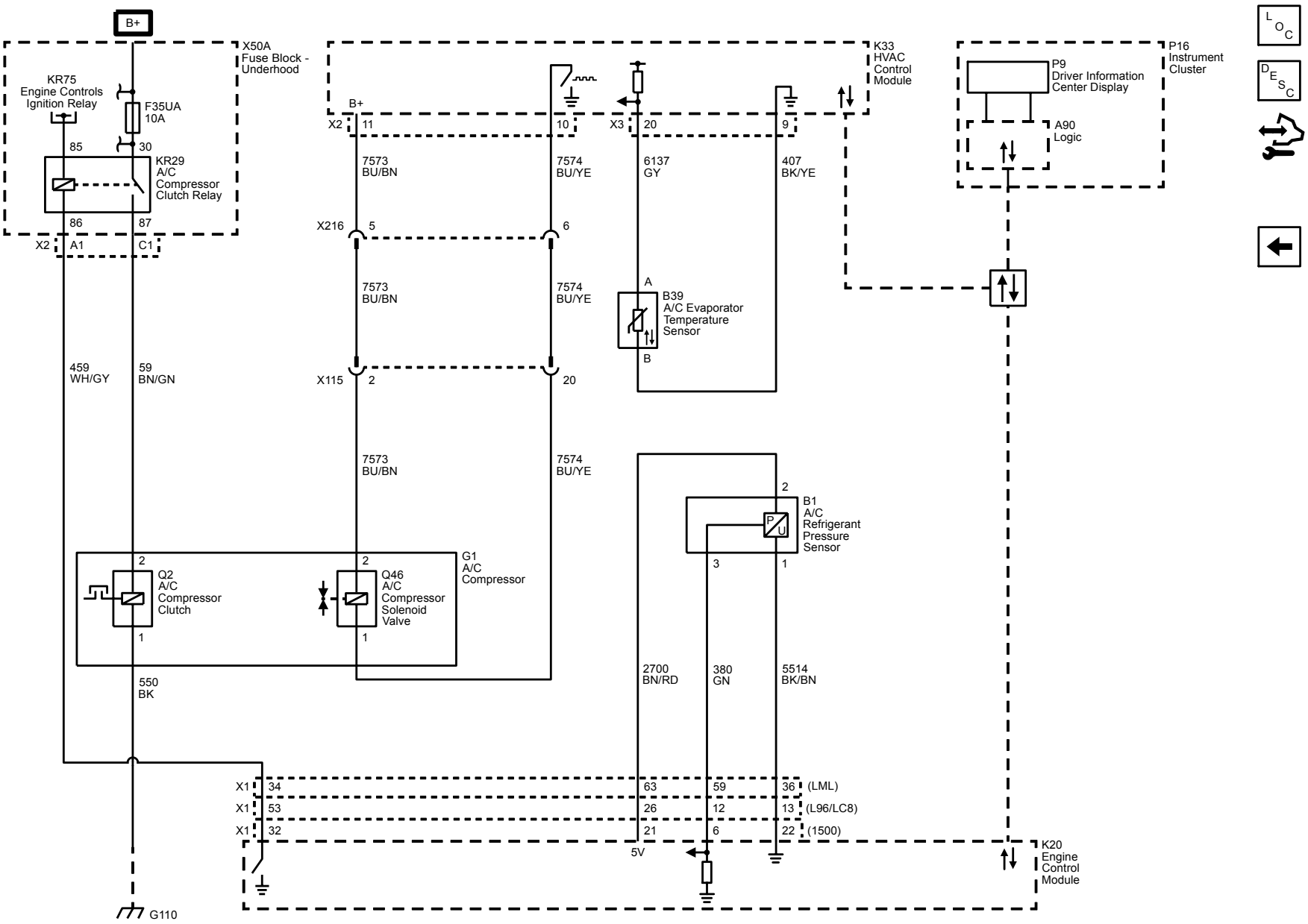

# Power and Signal Distribution

## Data Communications

### Schematic and Routing Diagrams

#### Data Communication Schematics

##### Data Link Power and Ground, and Low Speed GMLAN

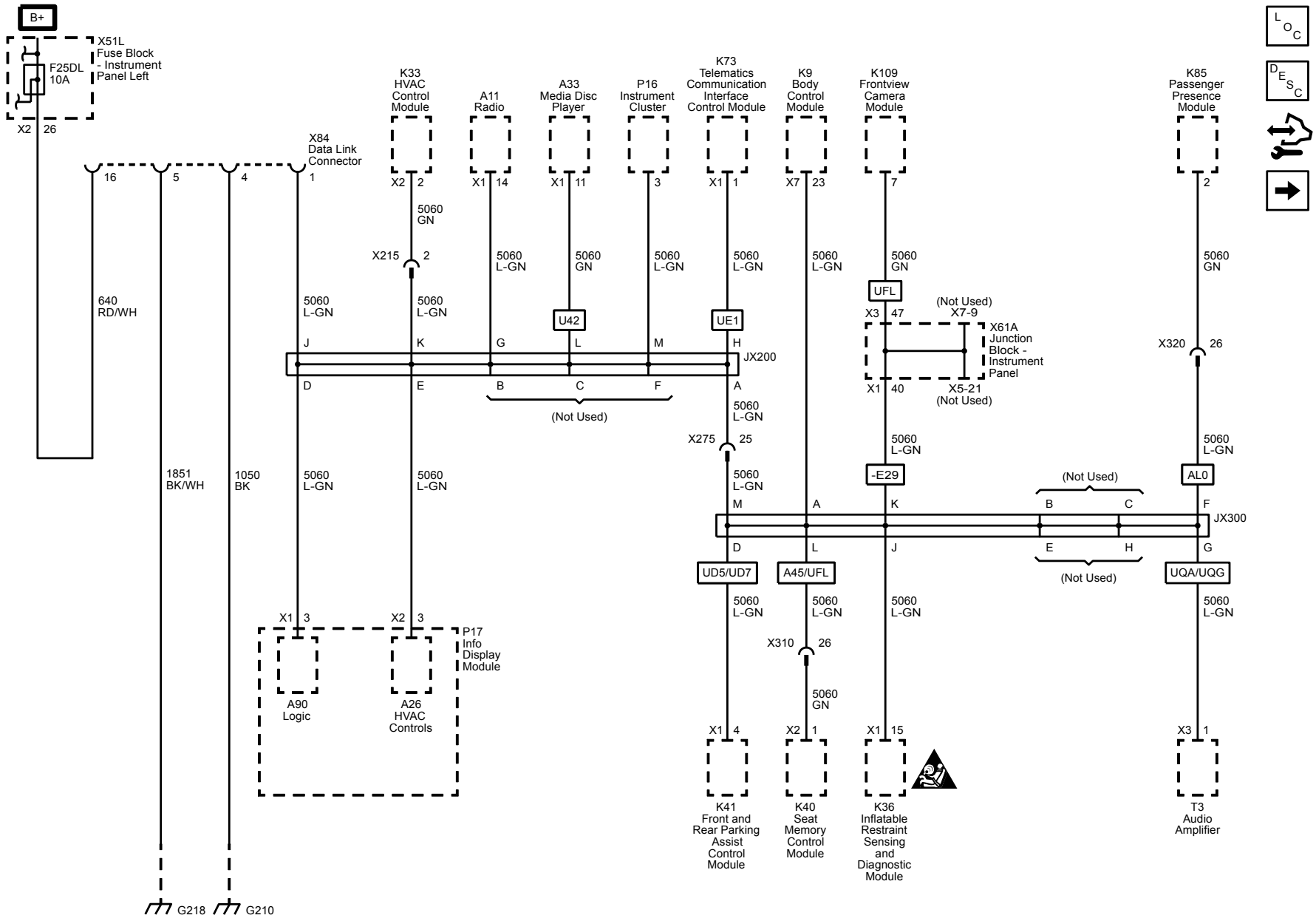

## High Speed GMLAN (1500 except E29)

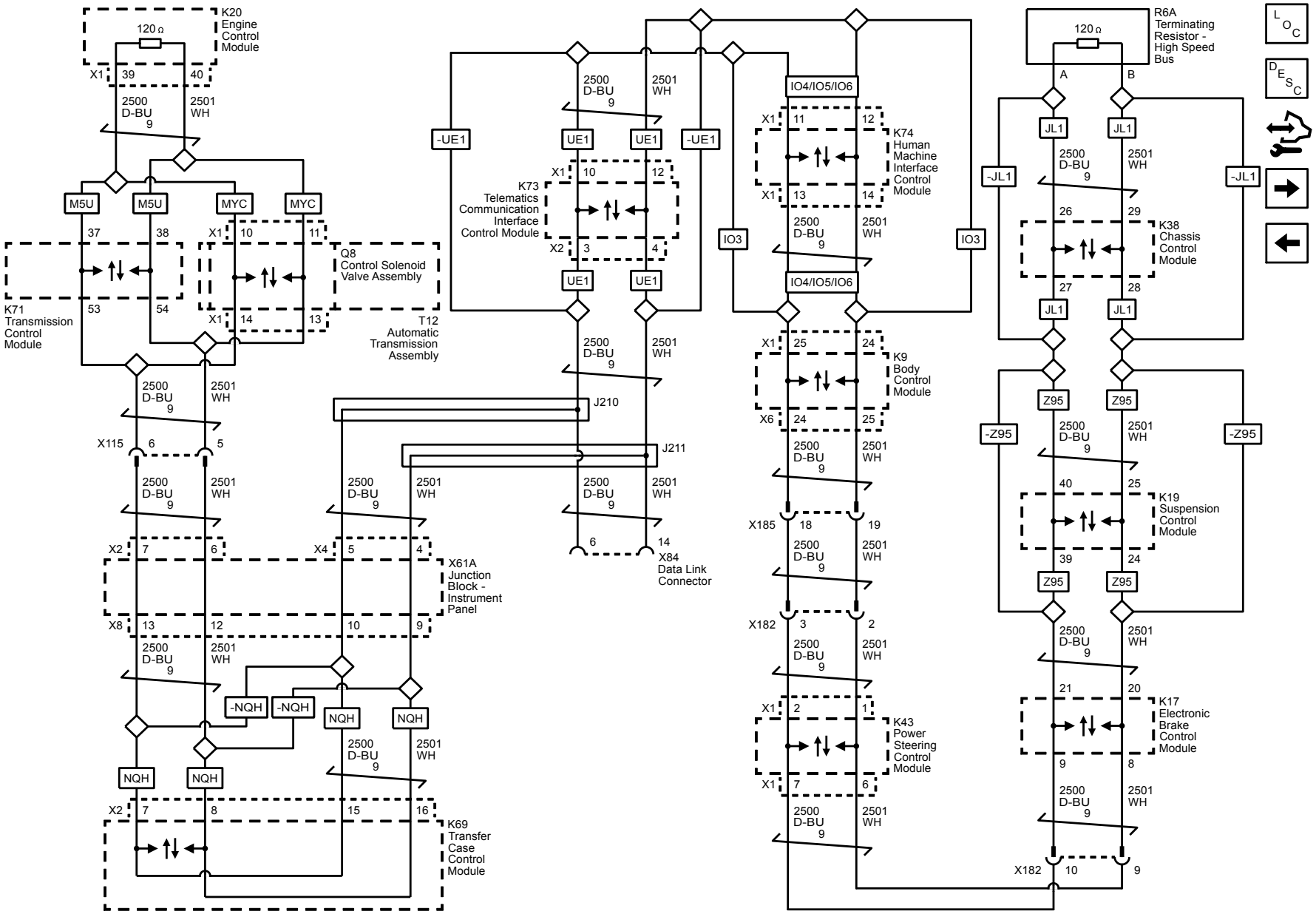

## High Speed GMLAN (2500/3500 except E29 or LML)

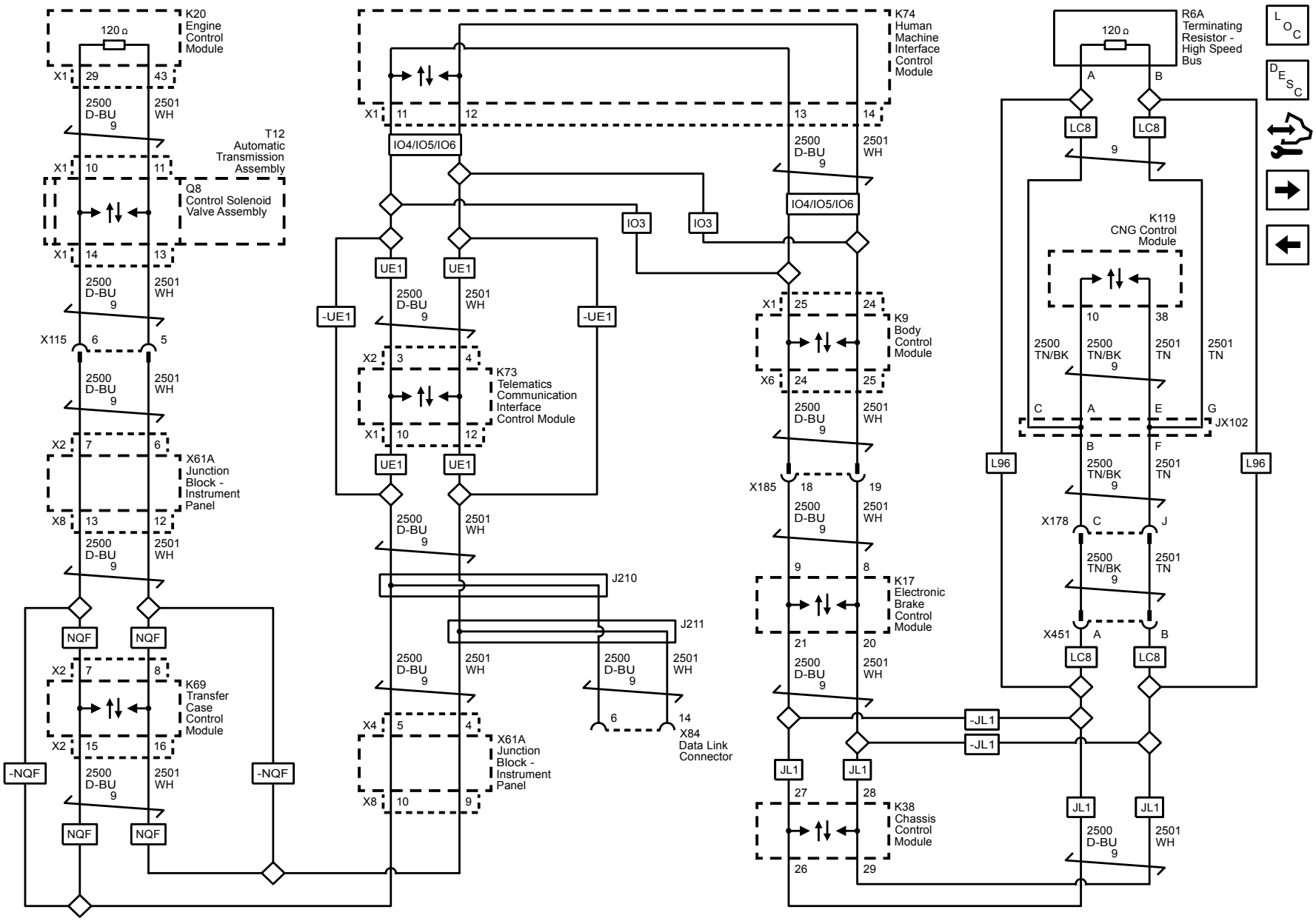

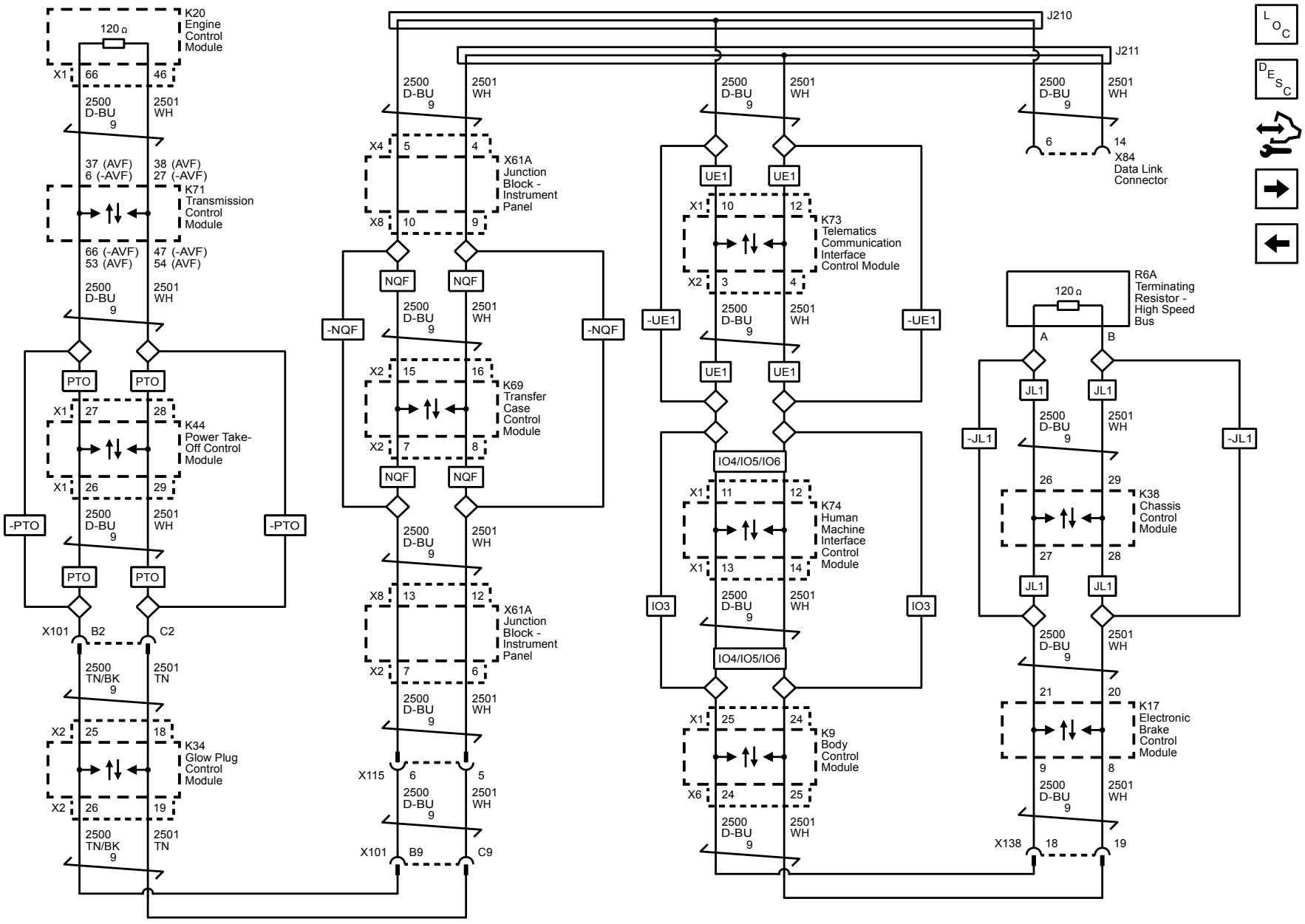


**2015 CHEVROLET SILVERADO/GMC SIERRA**
**ELECTRICAL SECTION**

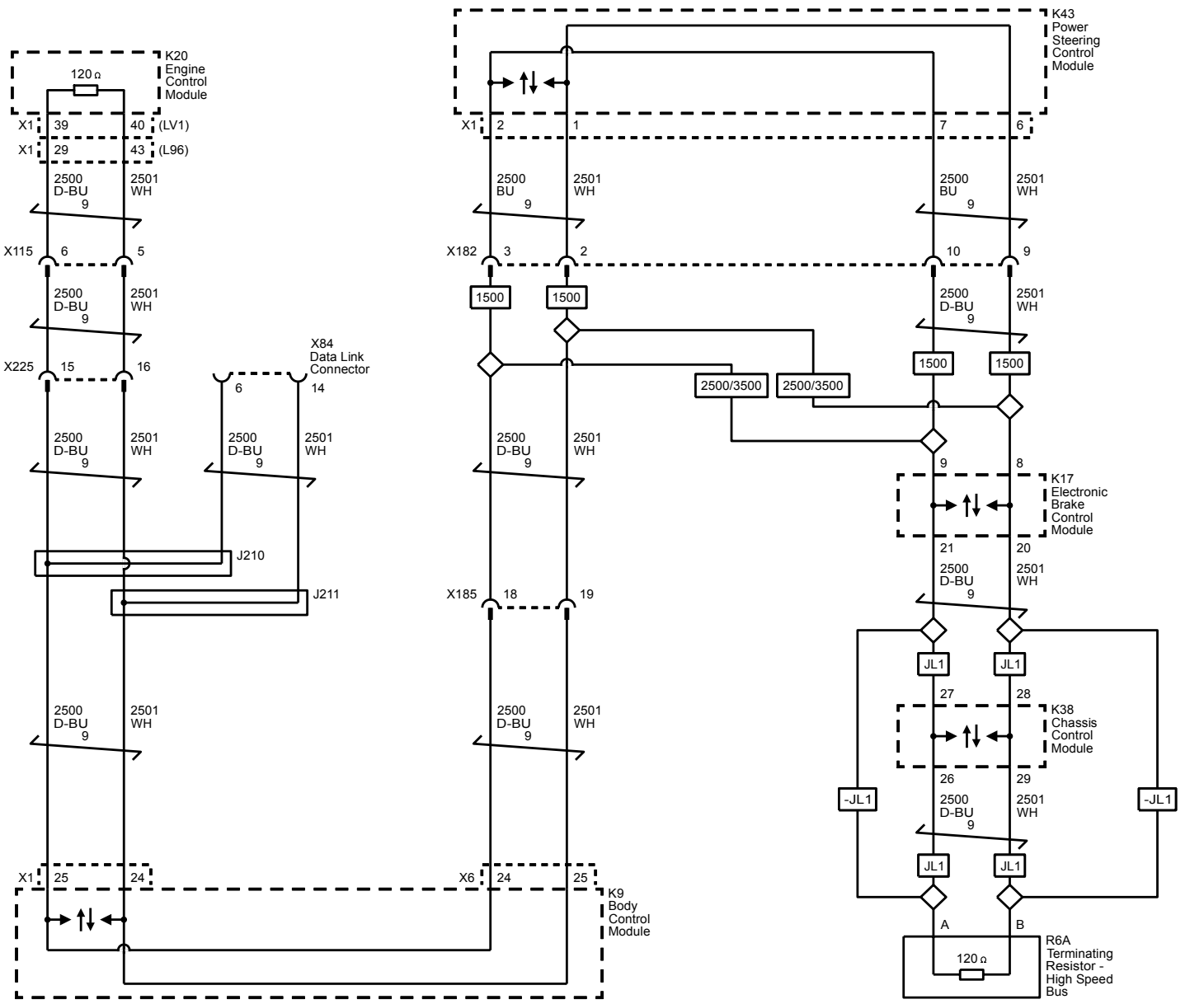
K20
Engine
Control
Module
120 Ω
X1 39 40 (LV1)
X1 29 43 (L96)
2500 D-BU 9
2501 WH
X115 6 5
X225 15 16
X84
Data Link
Connector
6 14
J210
J211
K43
Power
Steering
Control
Module
X1 2 1 7 6
X182 3 2 10 9
1500
2500/3500
K17
Electronic
Brake
Control
Module
21 20
X185 18 19
JL1
27 28
K38
Chassis
Control
Module
26 29
-JL1
A B
R6A
Terminating
Resistor -
High Speed
Bus
X1 25 24
X6 24 25
K9
Body
Control
Module

## Chassis Expansion Bus (except E29)

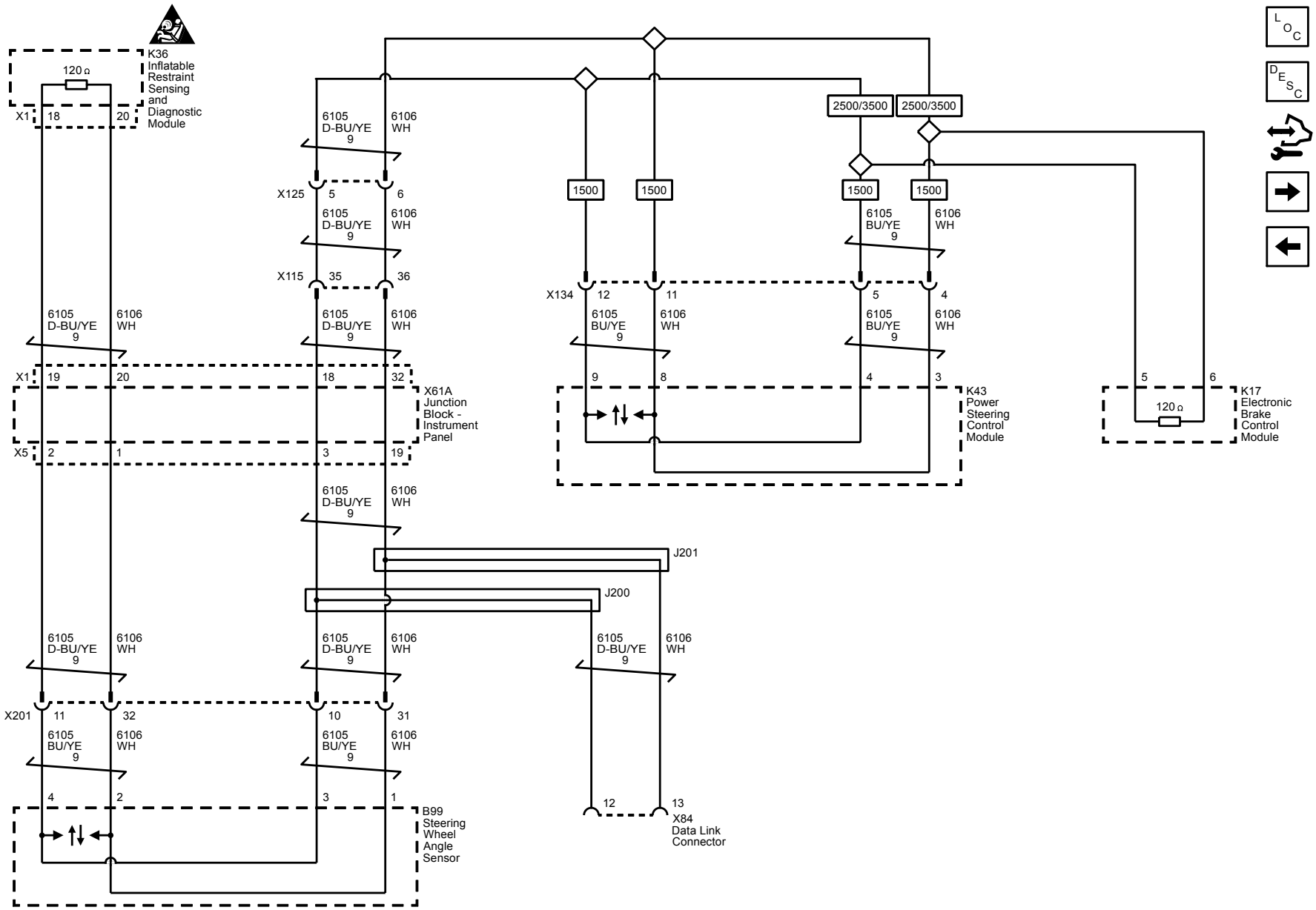

## Chassis Expansion Bus (E29)

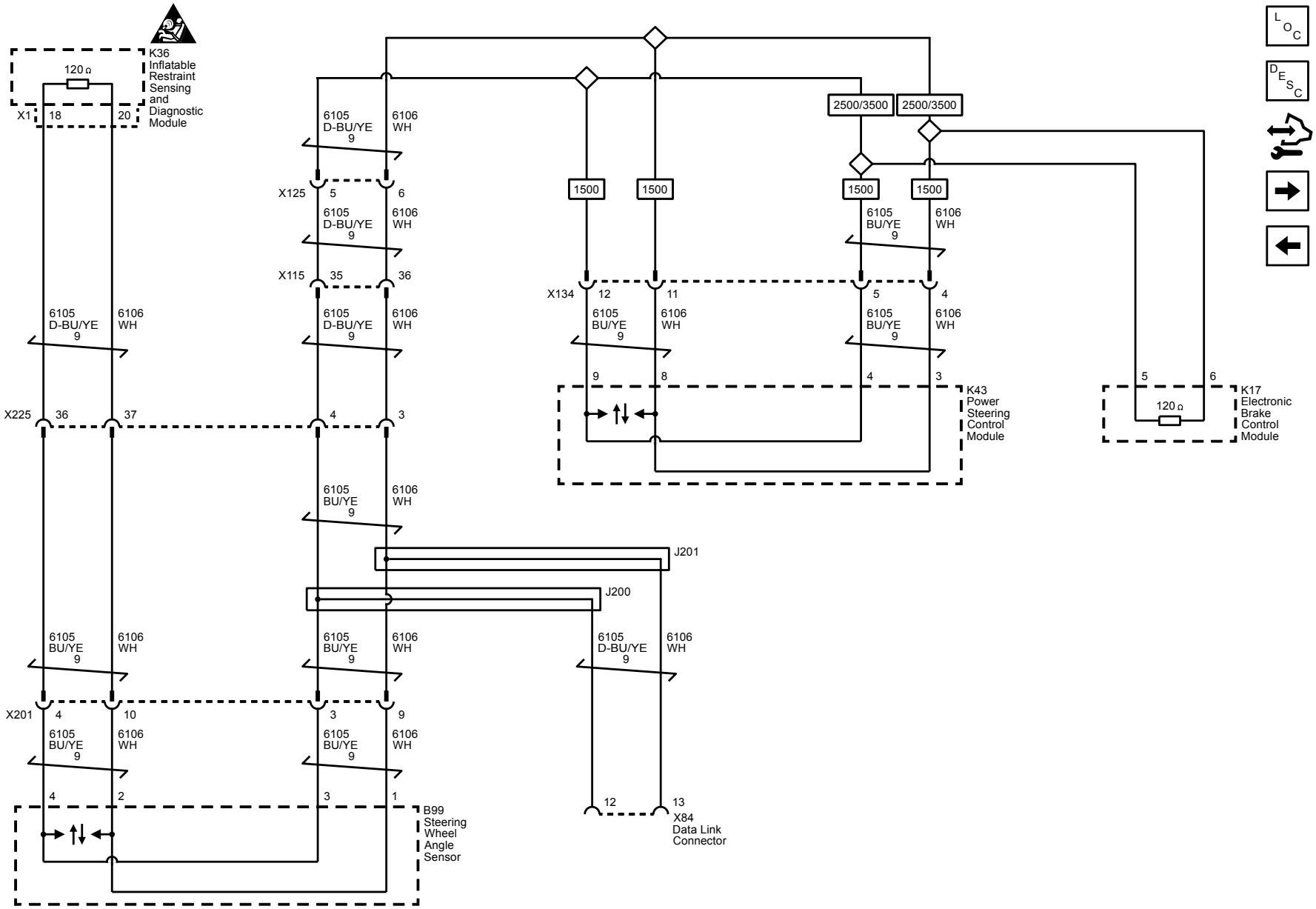

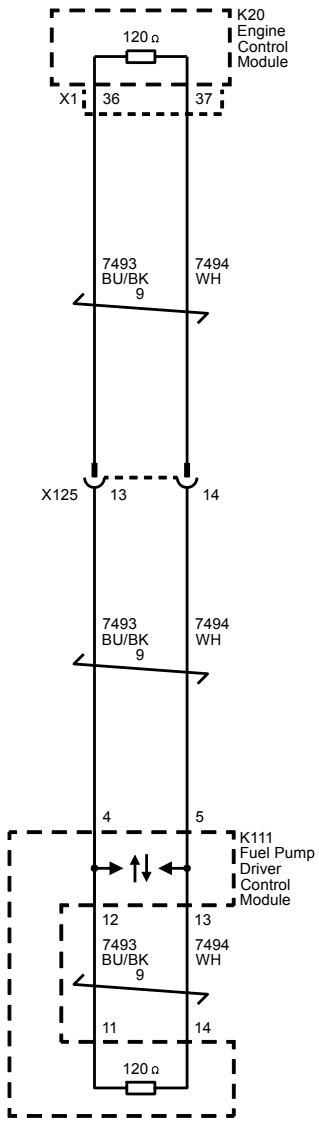
K20
Engine
Control
Module
120 Ω
X1
36
37
7493
BU/BK
9
7494
WH
X125
13
14
7493
BU/BK
9
7494
WH
4
5
K111
Fuel Pump
Driver
Control
Module
12
13
7493
BU/BK
9
7494
WH
11
14
120 Ω

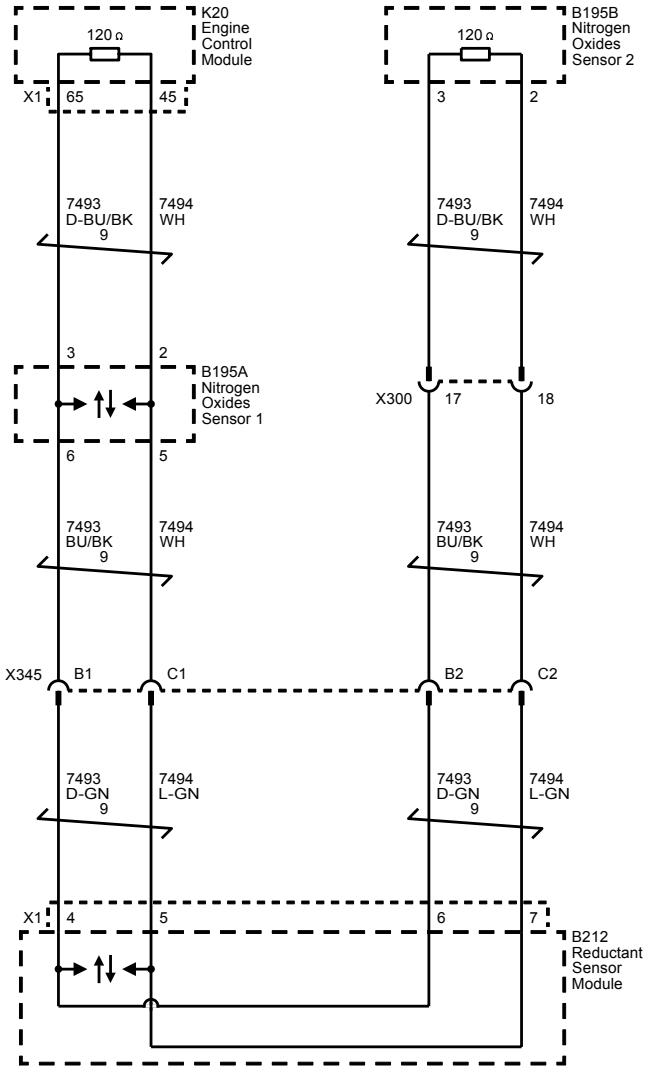
K20
Engine
Control
Module
120 Ω
X1
65
45
7493
D-BU/BK
9
7494
WH
3
2
B195A
Nitrogen
Oxides
Sensor 1
6
5
7493
BU/BK
9
7494
WH
X345
B1
C1
7493
D-GN
9
7494
L-GN
B195B
Nitrogen
Oxides
Sensor 2
120 Ω
3
2
7493
D-BU/BK
9
7494
WH
X300
17
18
7493
BU/BK
9
7494
WH
B2
C2
7493
D-GN
9
7494
L-GN
X1
4
5
6
7
B212
Reductant
Sensor
Module

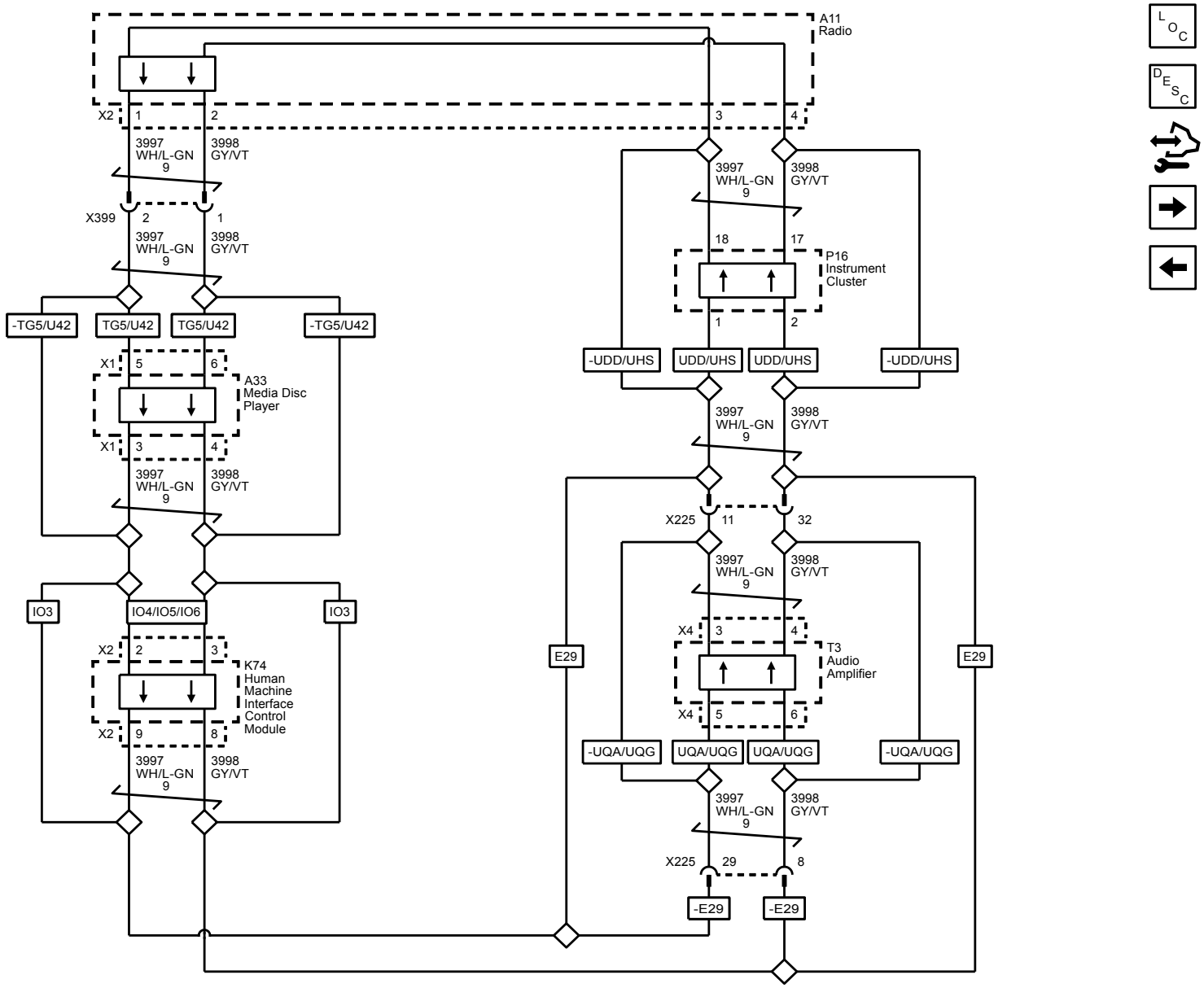
A11
Radio
X2
1
2
3
4
3997
WH/L-GN
9
3998
GY/VT
X399
2
1
18
17
P16
Instrument
Cluster
-TG5/U42
TG5/U42
TG5/U42
-TG5/U42
-UDD/UHS
UDD/UHS
UDD/UHS
-UDD/UHS
X1
5
6
A33
Media Disc
Player
3
4
X225
11
32
IO3
IO4/IO5/IO6
IO3
E29
E29
X4
3
4
T3
Audio
Amplifier
5
6
-UQA/UQG
UQA/UQG
UQA/UQG
-UQA/UQG
K74
Human
Machine
Interface
Control
Module
9
8
29
-E29
-E29

## Accessory Wakeup and Communications Enable

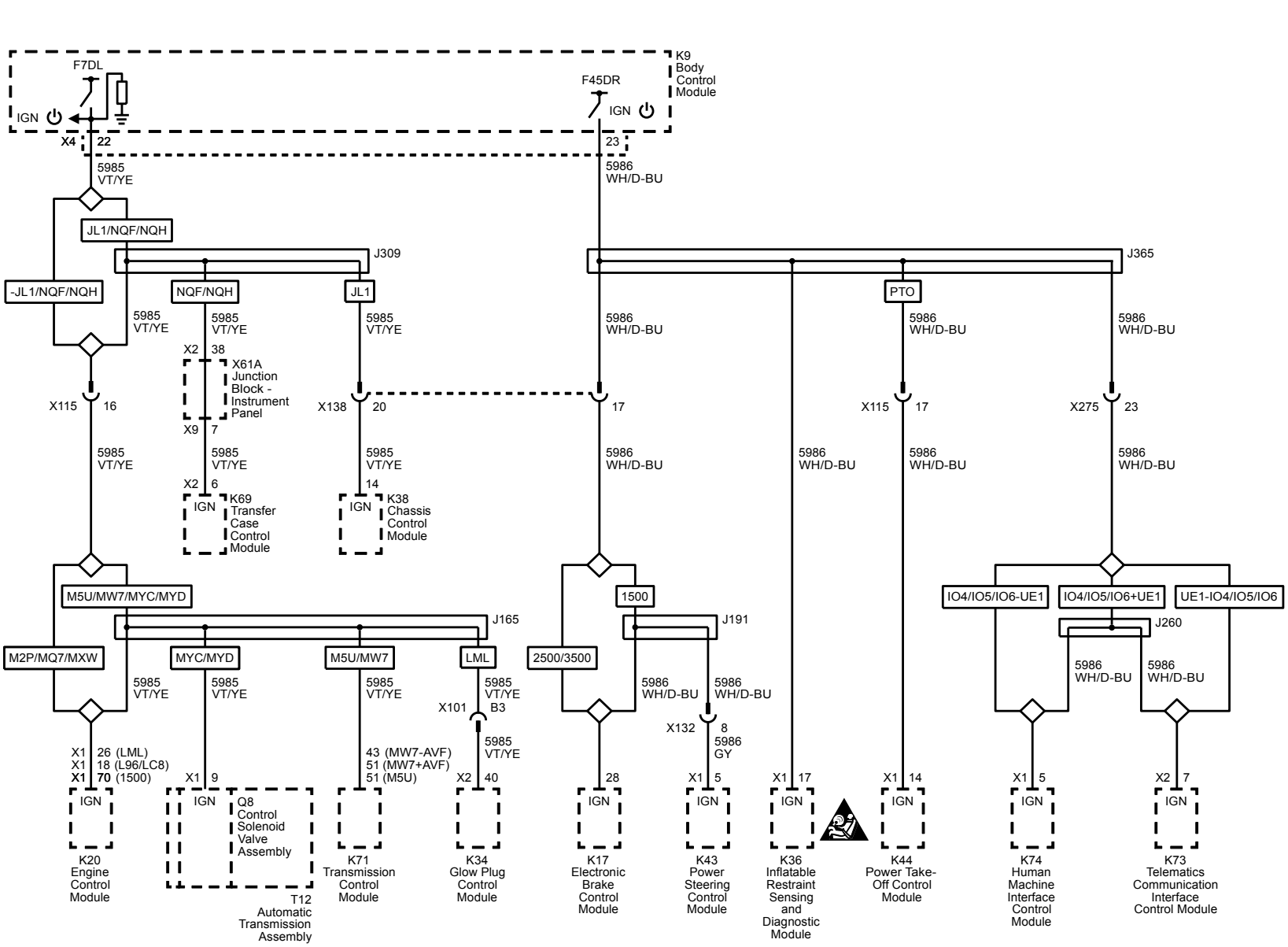

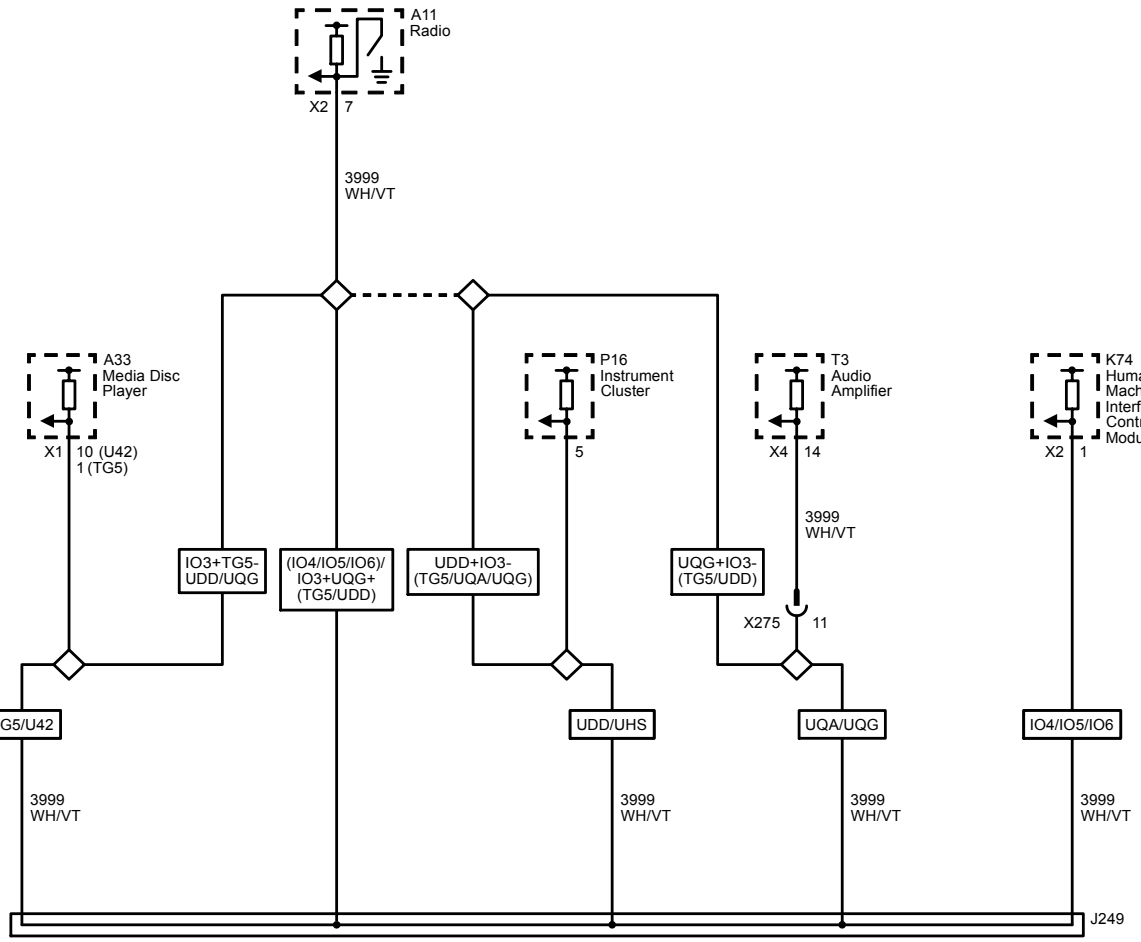
A11
Radio
X2 7
3999
WH/VT
A33
Media Disc
Player
X1 10 (U42)
1 (TG5)
P16
Instrument
Cluster
5
T3
Audio
Amplifier
X4 14
K74
Human
Machine
Interface
Control
Module
X2 1
3999
WH/VT
IO3+TG5-
UDD/UQG
(IO4/IO5/IO6)/
IO3+UQG+
(TG5/UDD)
UDD+IO3-
(TG5/UQA/UQG)
UQG+IO3-
(TG5/UDD)
X275 11
TG5/U42
UDD/UHS
UQA/UQG
IO4/IO5/IO6
3999
WH/VT
3999
WH/VT
3999
WH/VT
3999
WH/VT
3999
WH/VT
J249

## Linear Interconnect Network

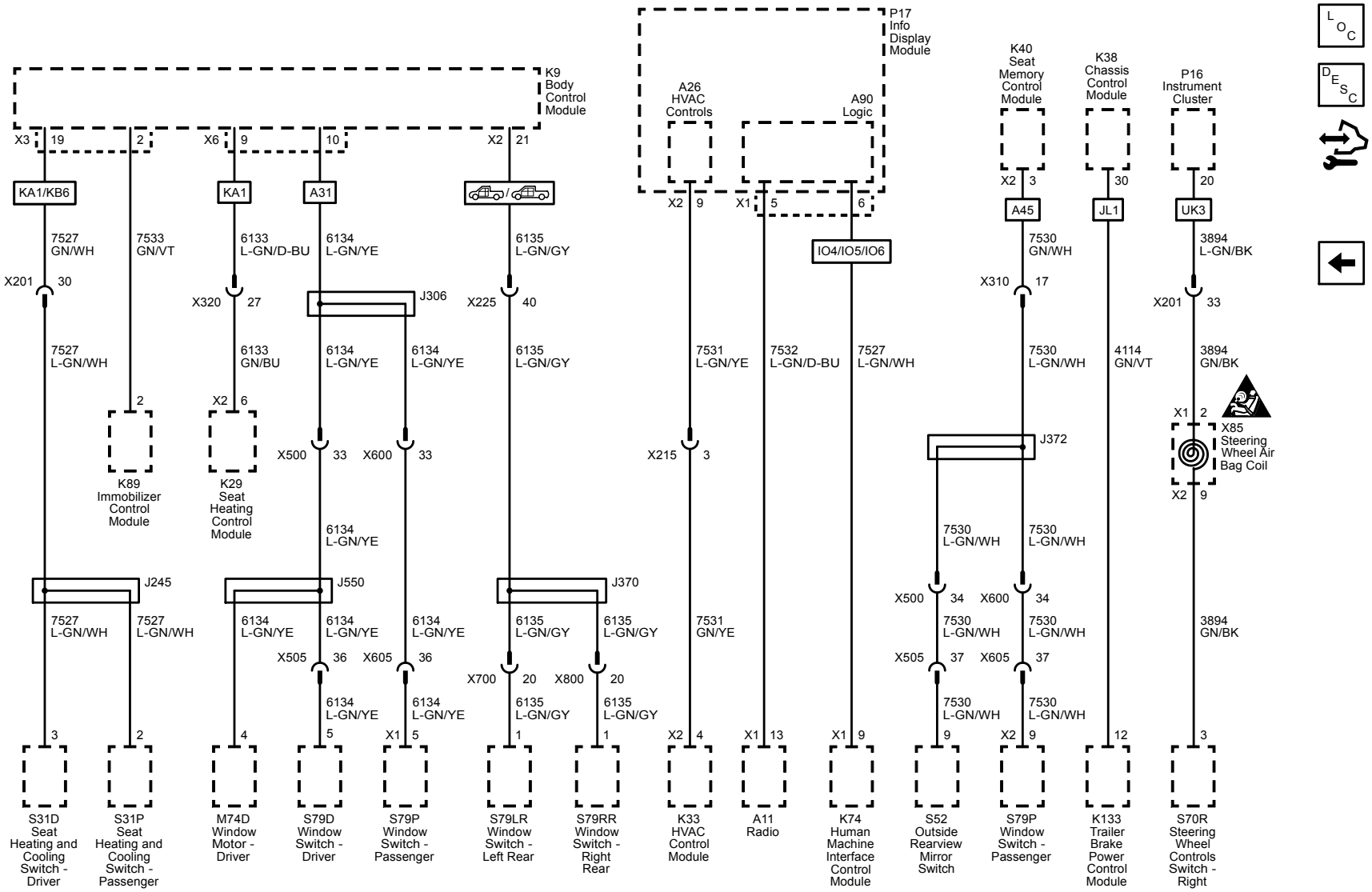

## Module Power, Ground and Serial Data

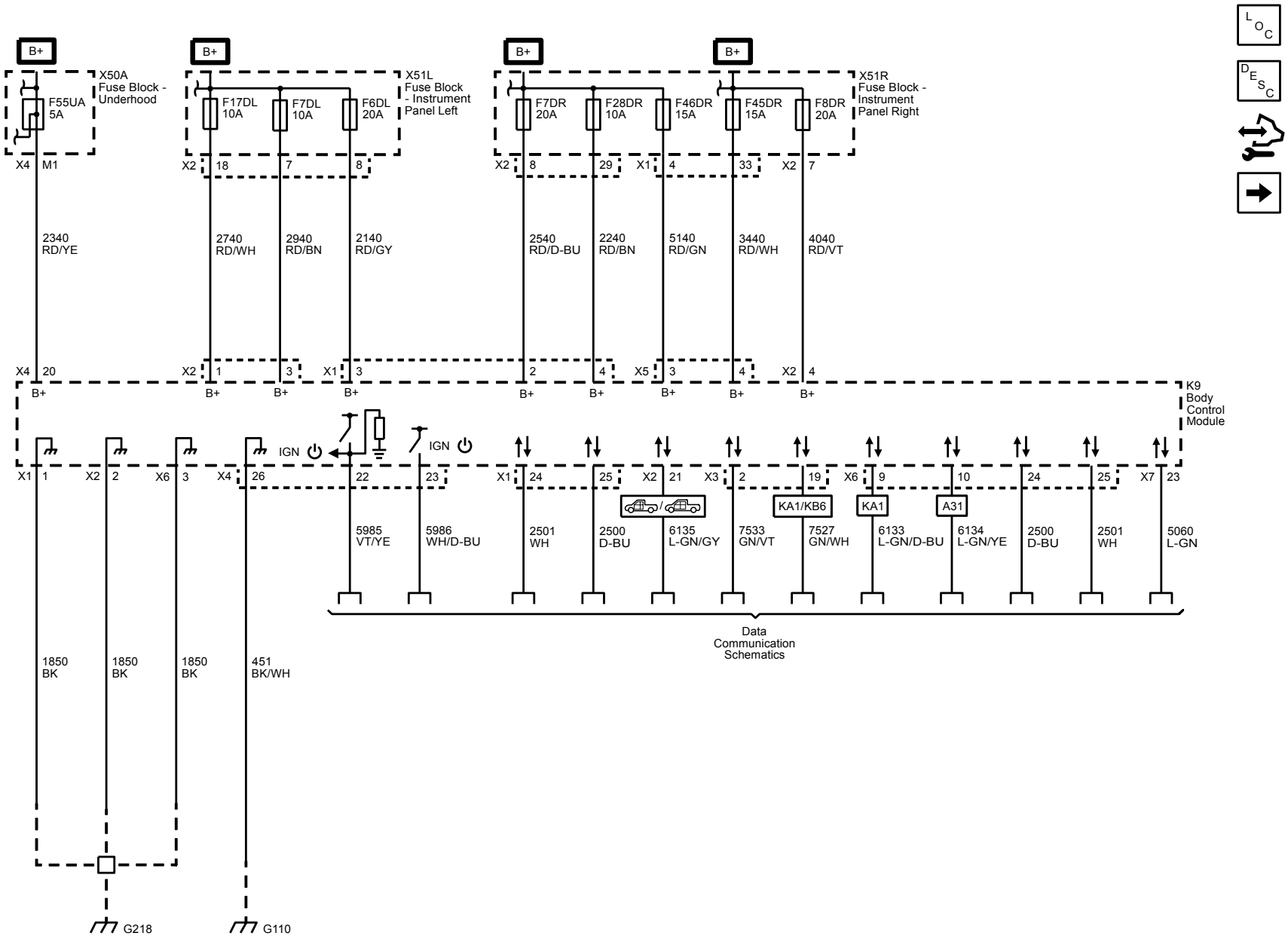

## Subsystem References (1 of 3)

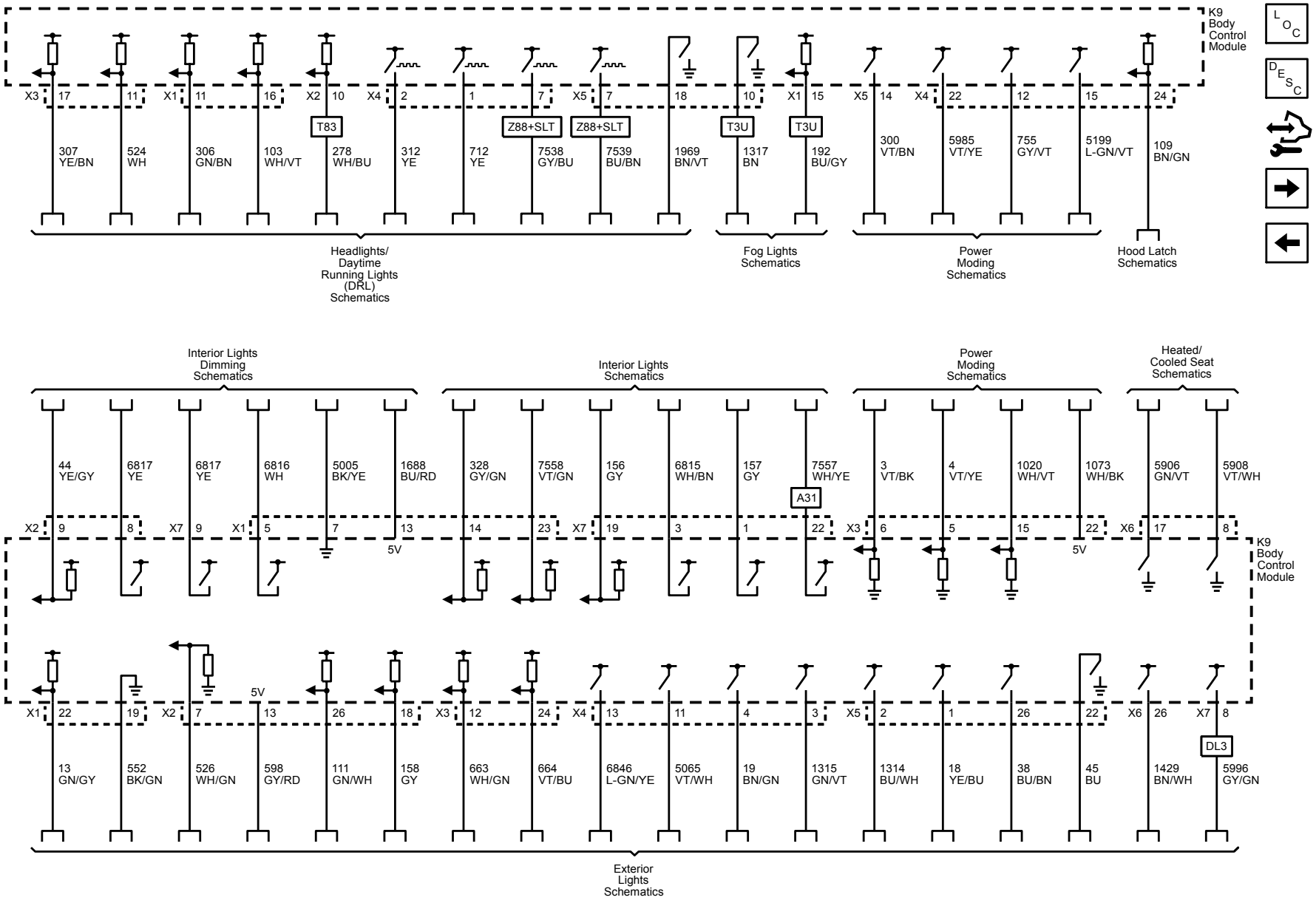

## Subsystem References (2 of 3)

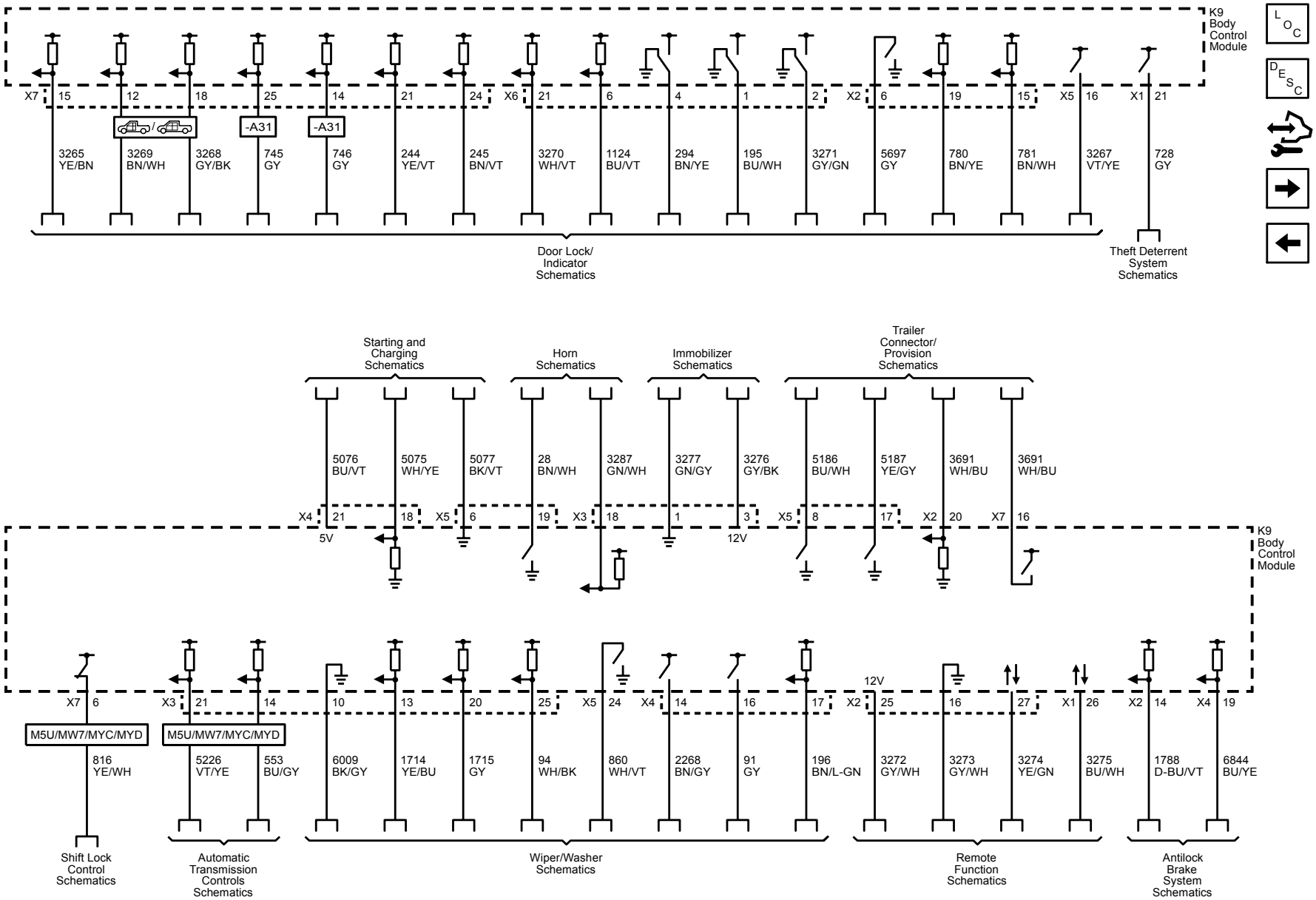

## Subsystem References (3 of 3)

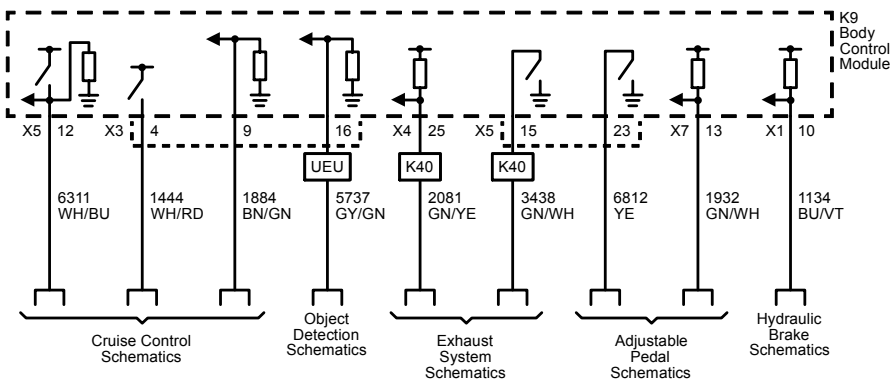

# Power Outlets

## Schematic and Routing Diagrams

### Cigar Lighter/Power Outlet Schematics

#### 12-Volt DC Power Outlets (Bench Seat - D09)

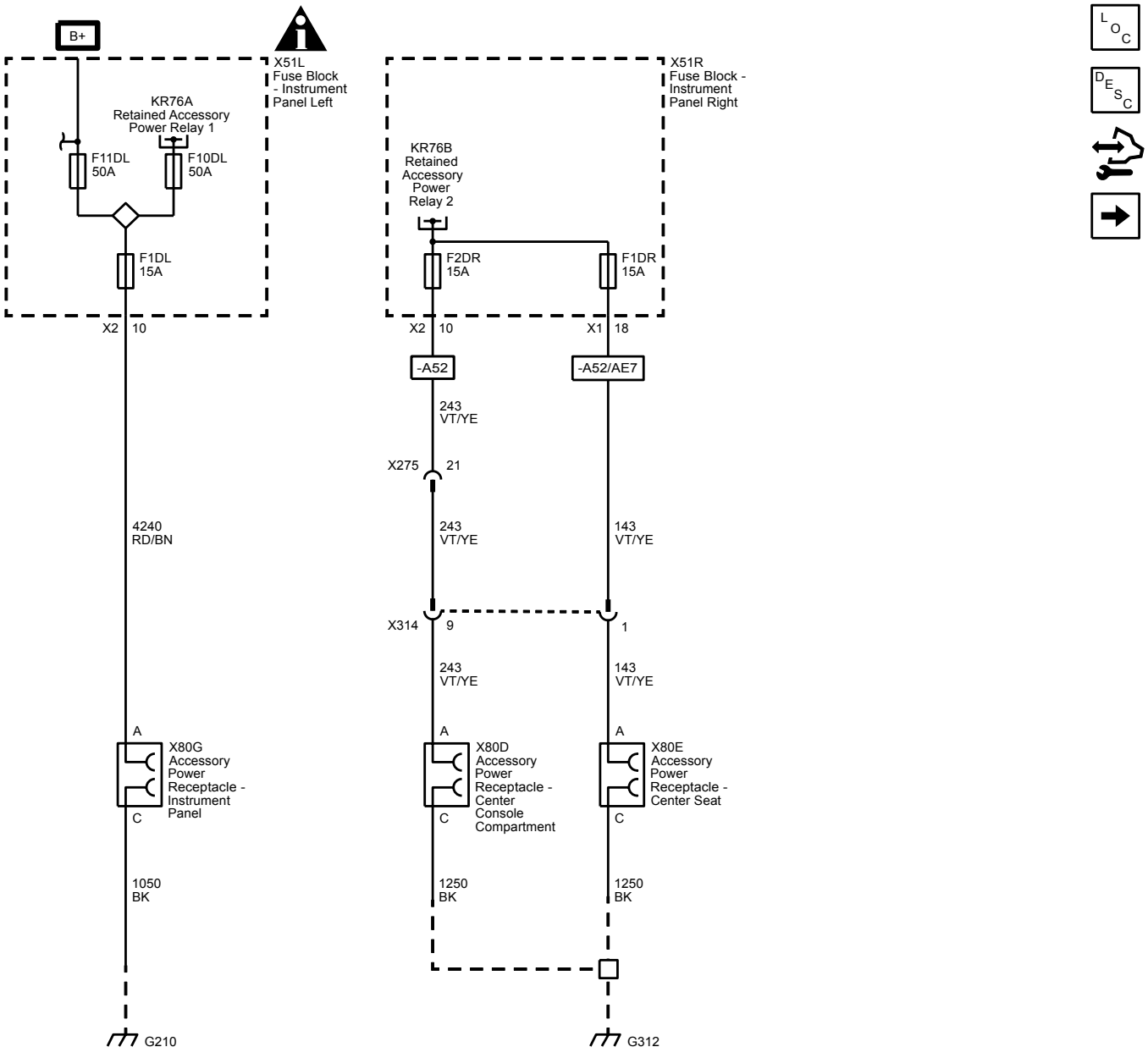

# 12-Volt DC Power Outlets (with Console - D07)

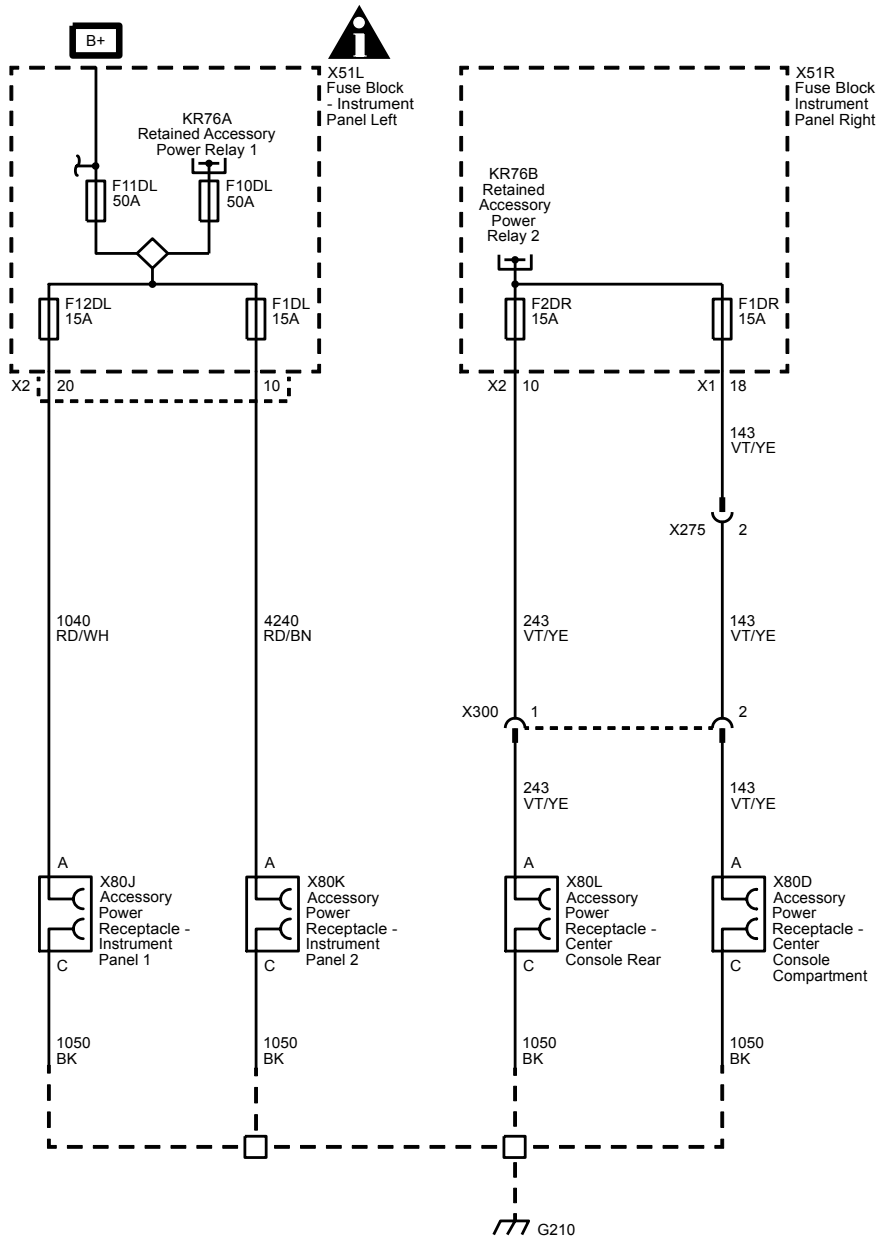

# 110-Volt AC Power Outlet (KI4)

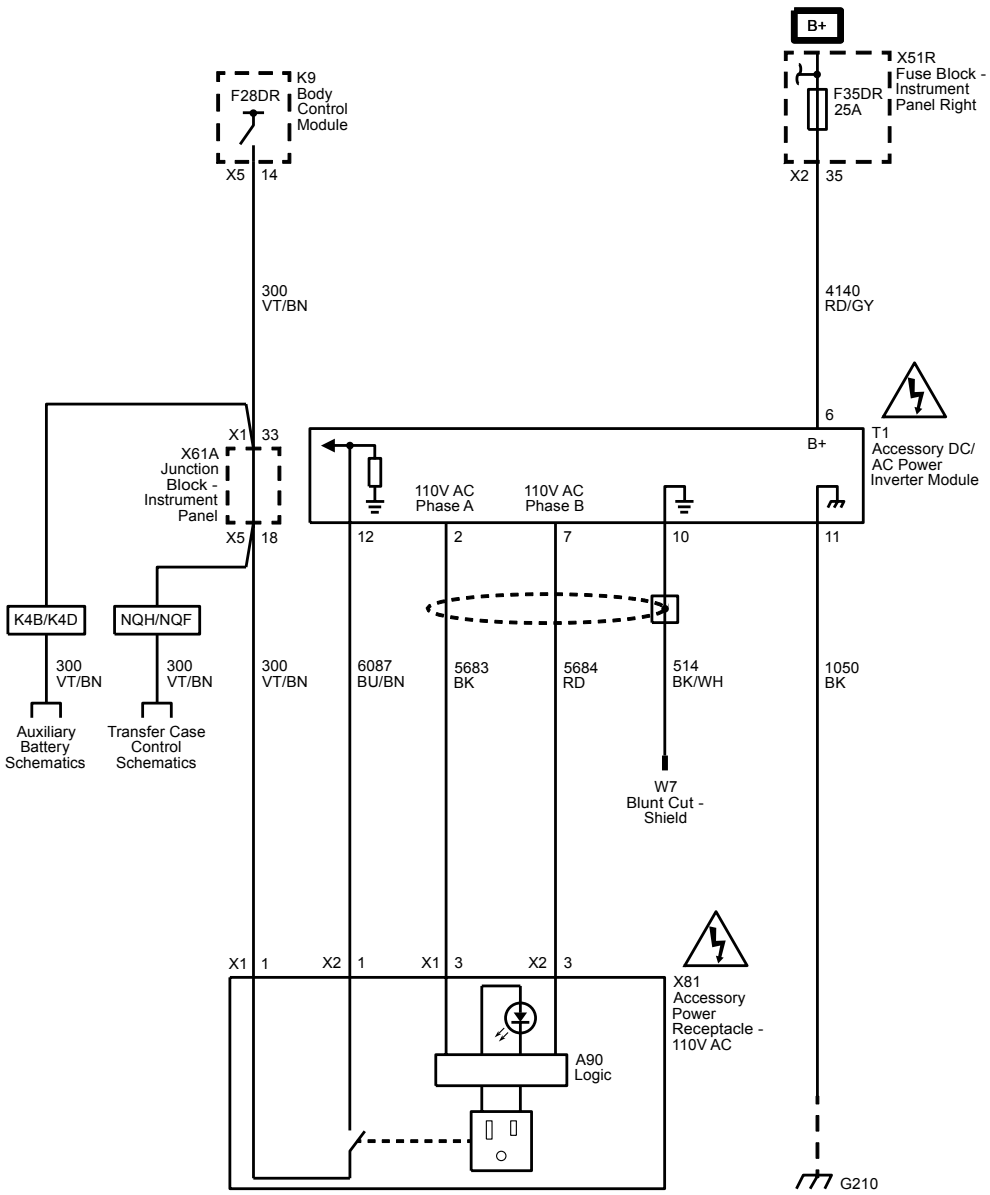

# 220-Volt AC Power Outlet (KI5)

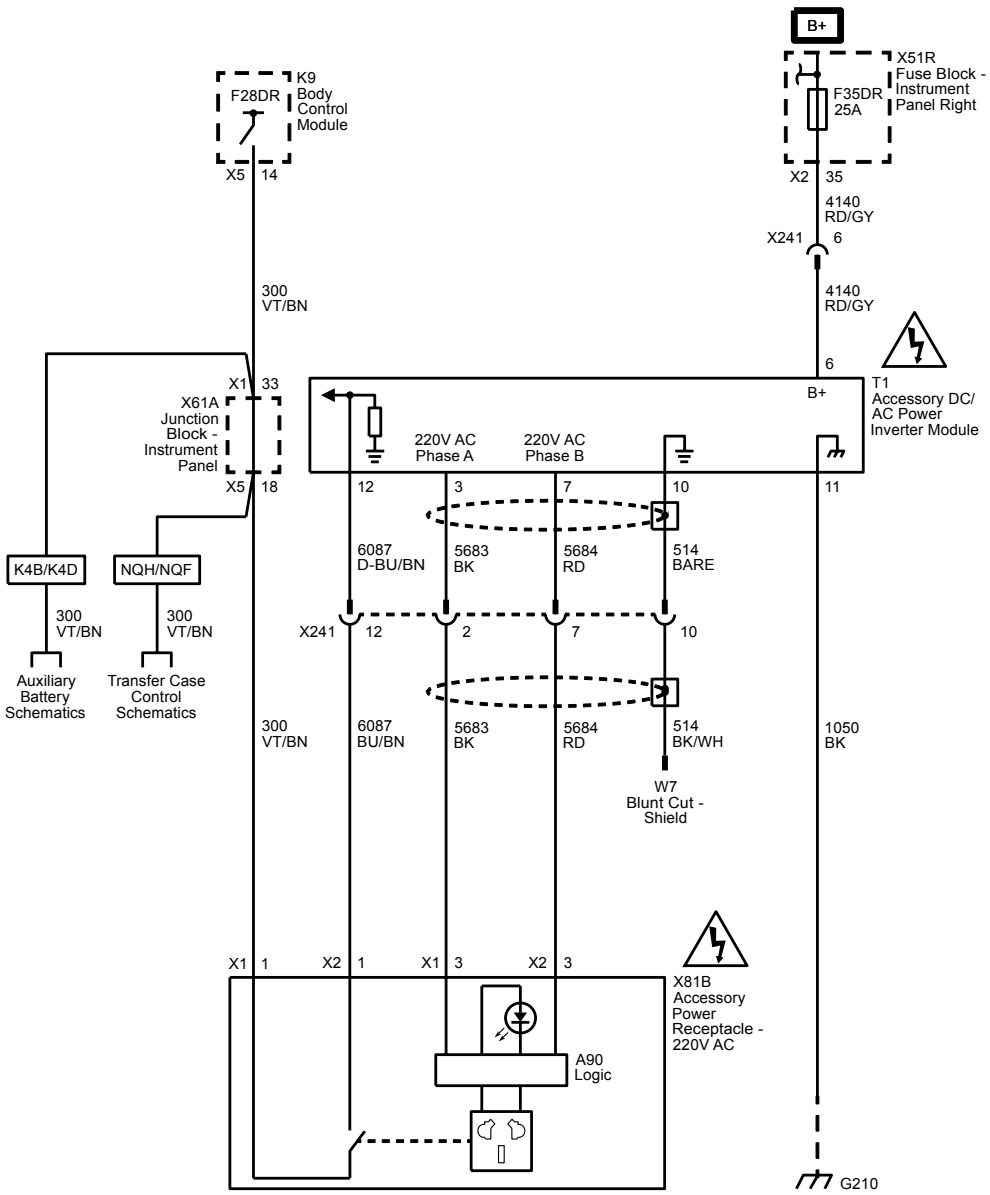

# Wiring Systems and Power Management

## Schematic and Routing Diagrams

### Power Distribution Schematics

#### X50D Fuse Block - Battery and X50E Fuse Block - Battery Auxiliary (1500)

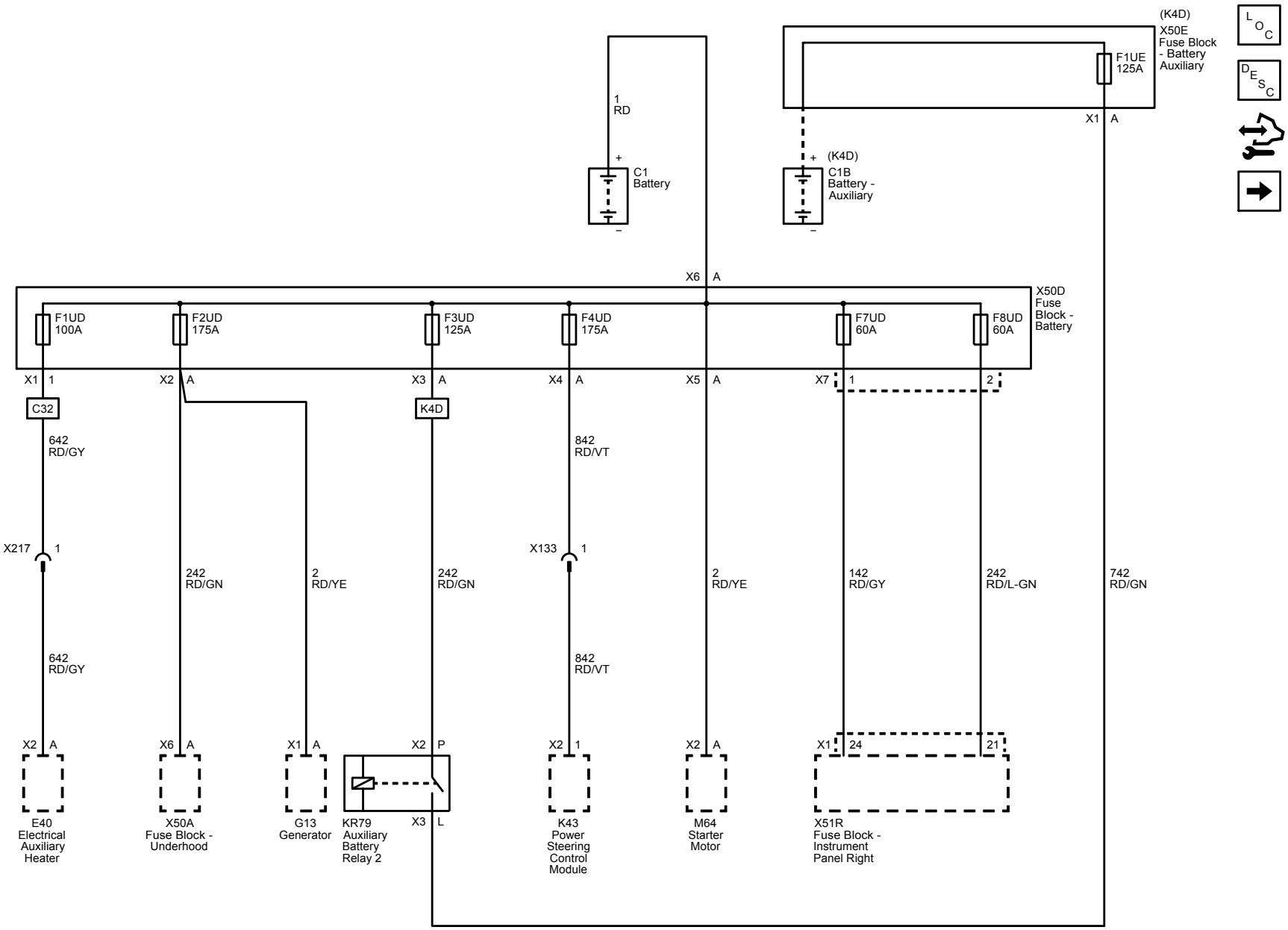

## B+ Bus X50A Fuse Block - Underhood (1 of 2 - 1500)

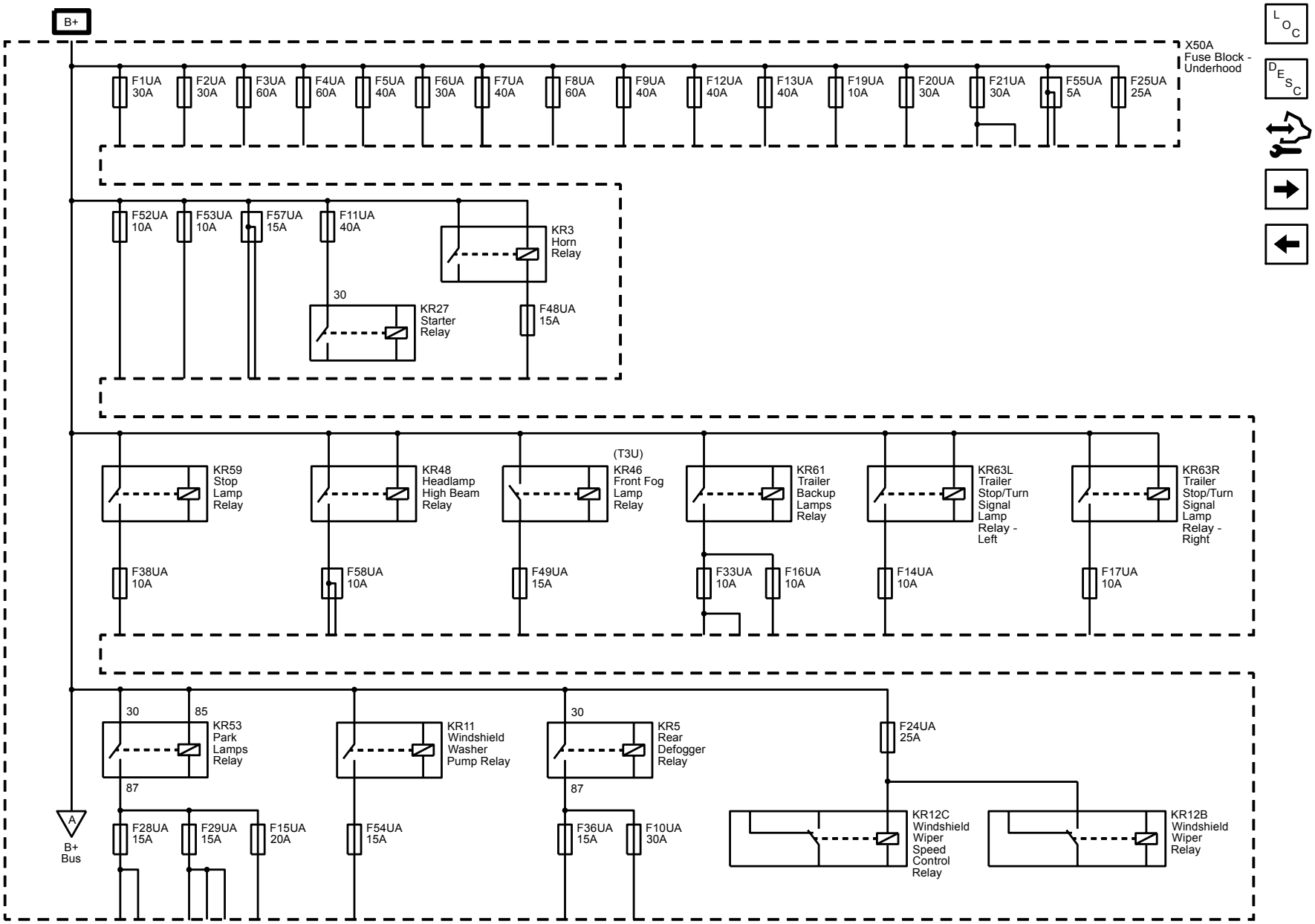

# B+ Bus X50A Fuse Block - Underhood (2 of 2 - 1500)

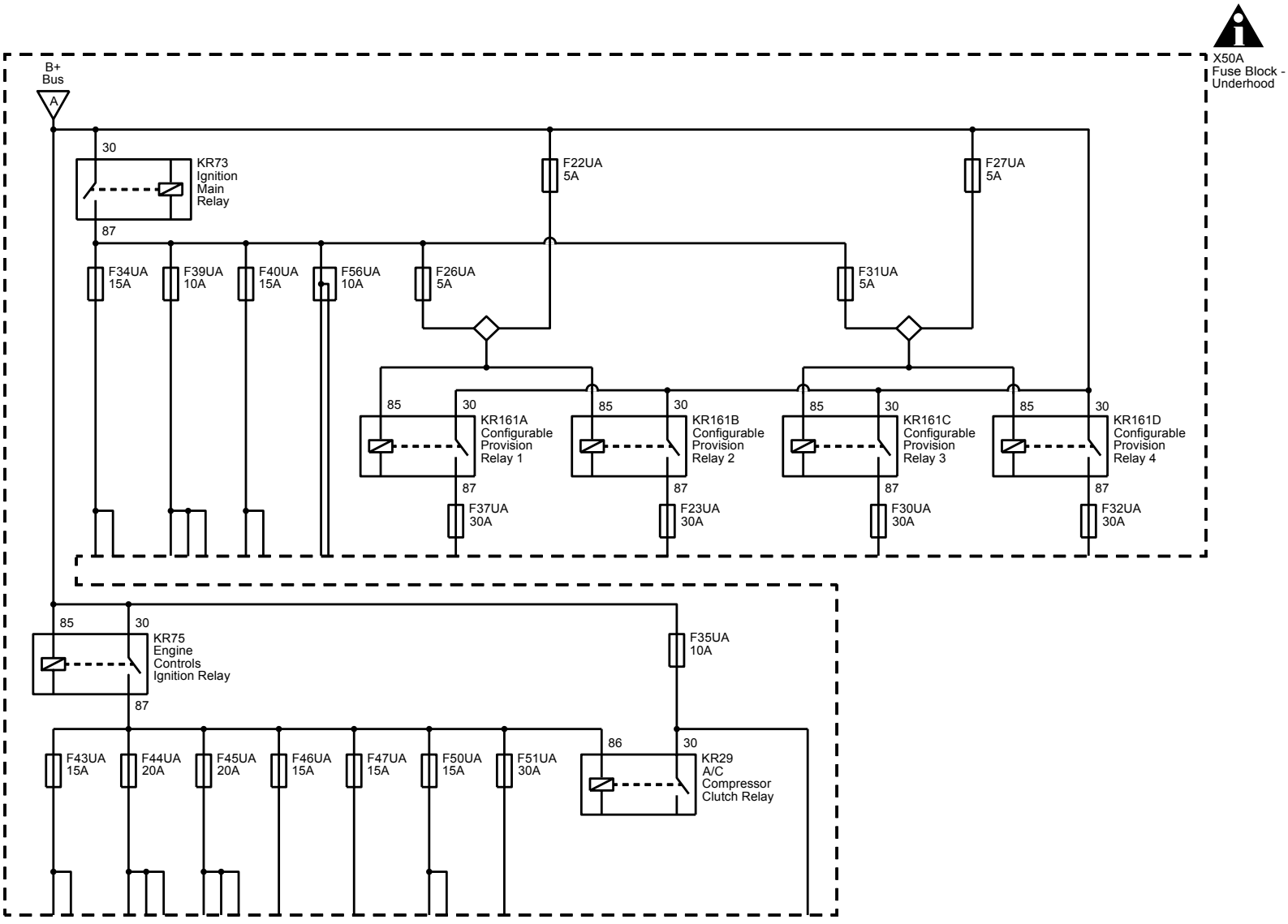

# F1UA, F2UA, F12UA, F13UA, F19UA, F20UA, F21UA and F55UA Fuses (1500)

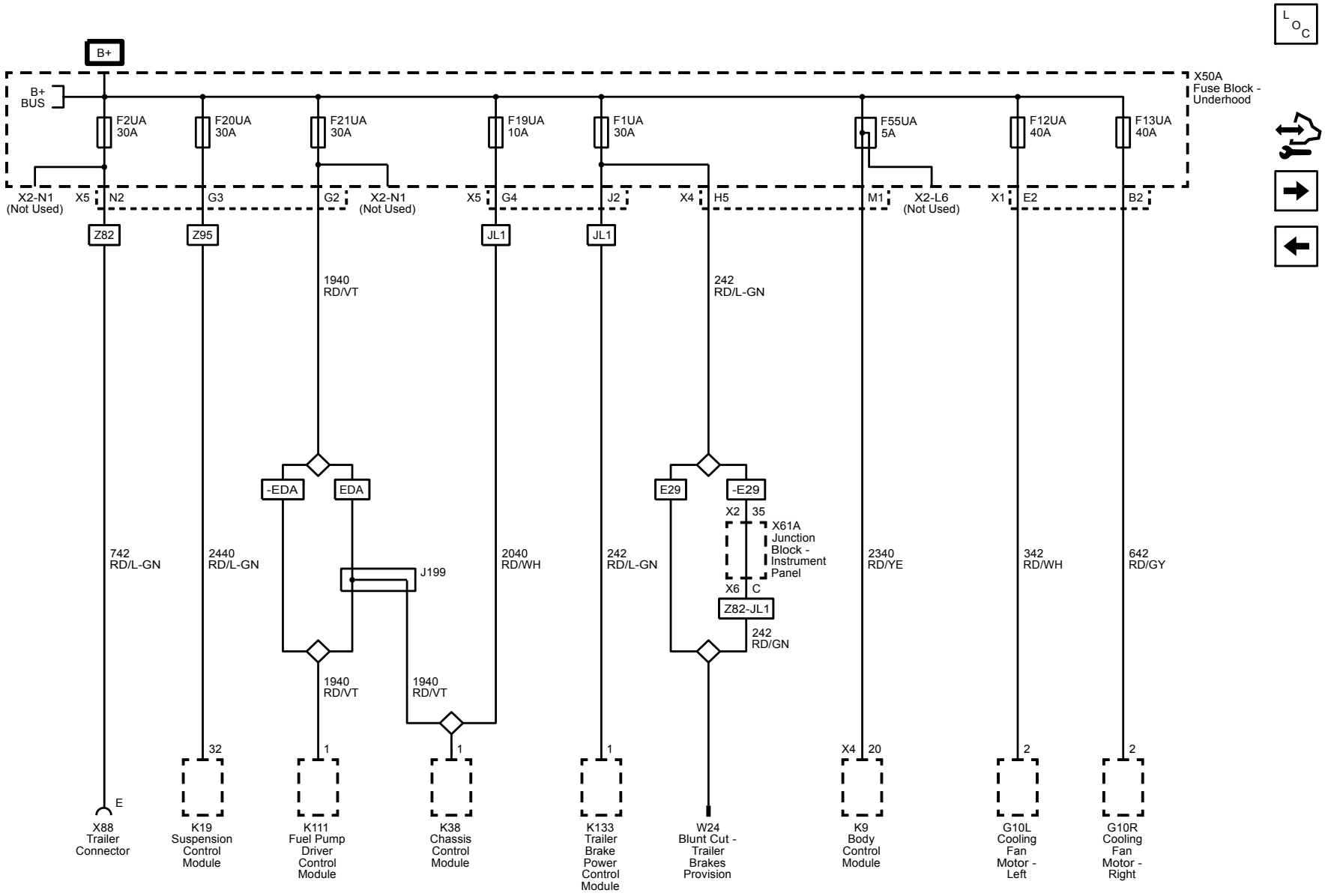

# F3UA, F4UA, F8UA, F25UA F52UA and F57UA Fuses (1500)

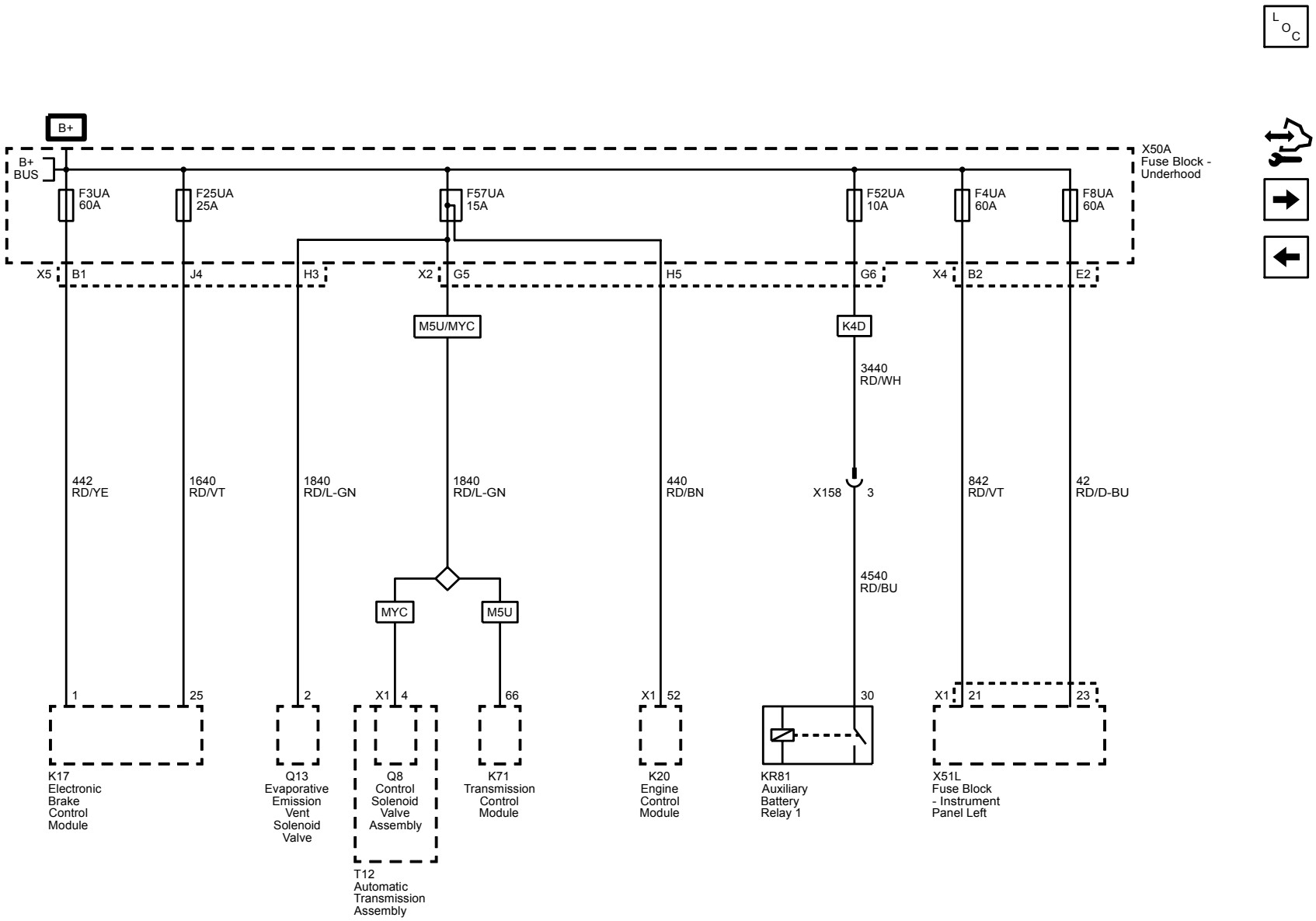

# F6UA, F10UA, F36UA, F48UA and F54UA Fuses (1500)

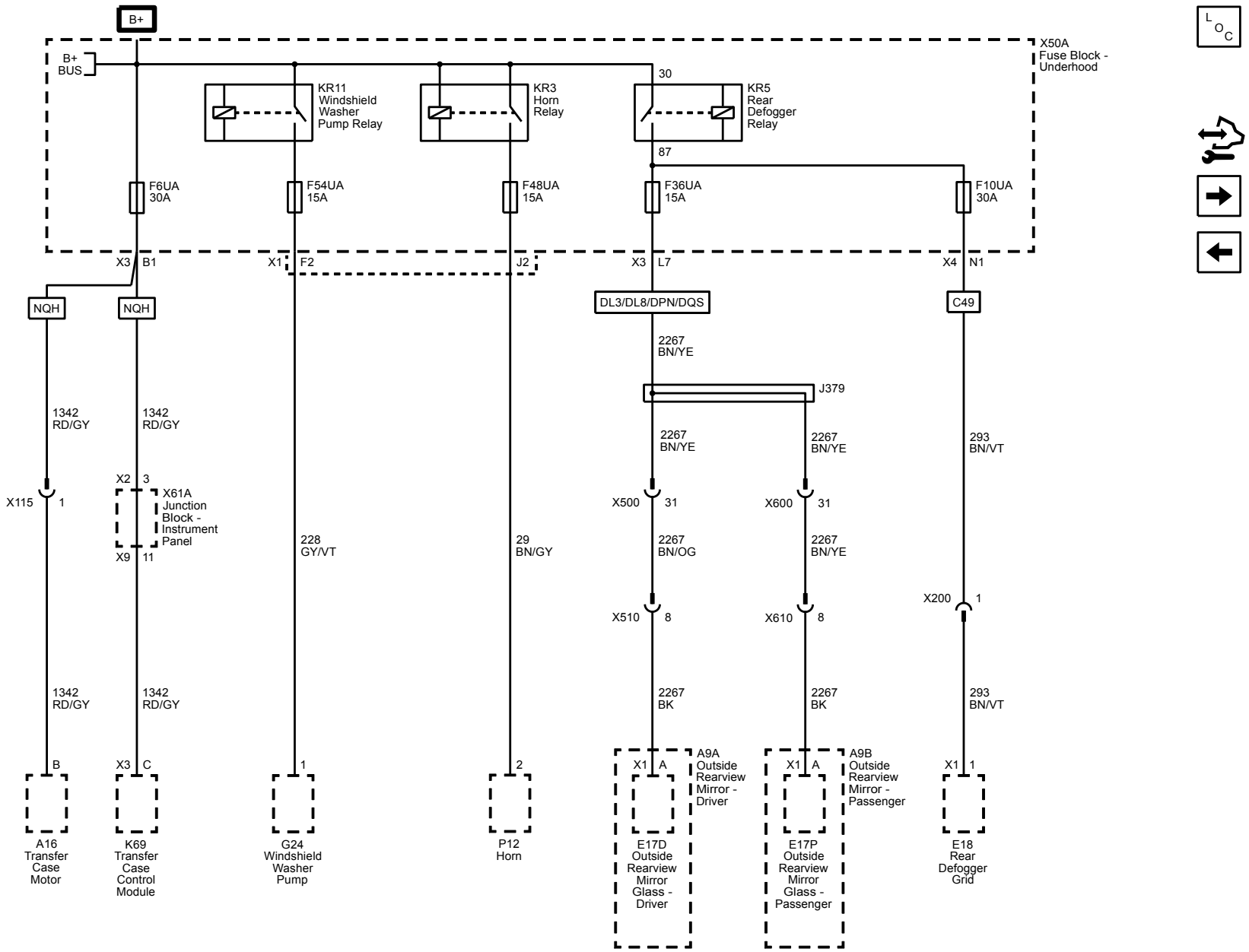

## F14UA, F17UA and F58UA Fuses (1500)

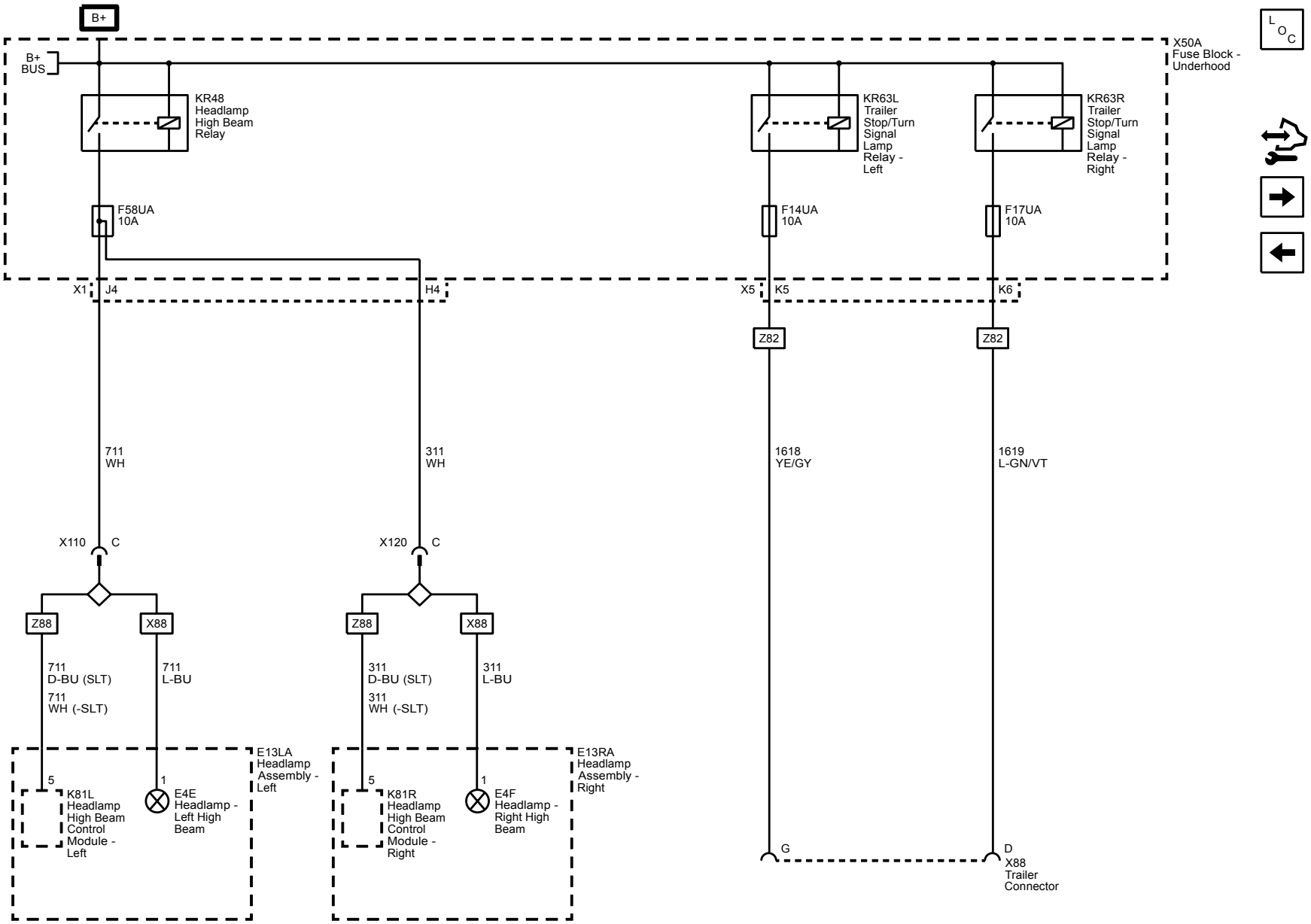

## F15UA and F28UA Fuses (1500)

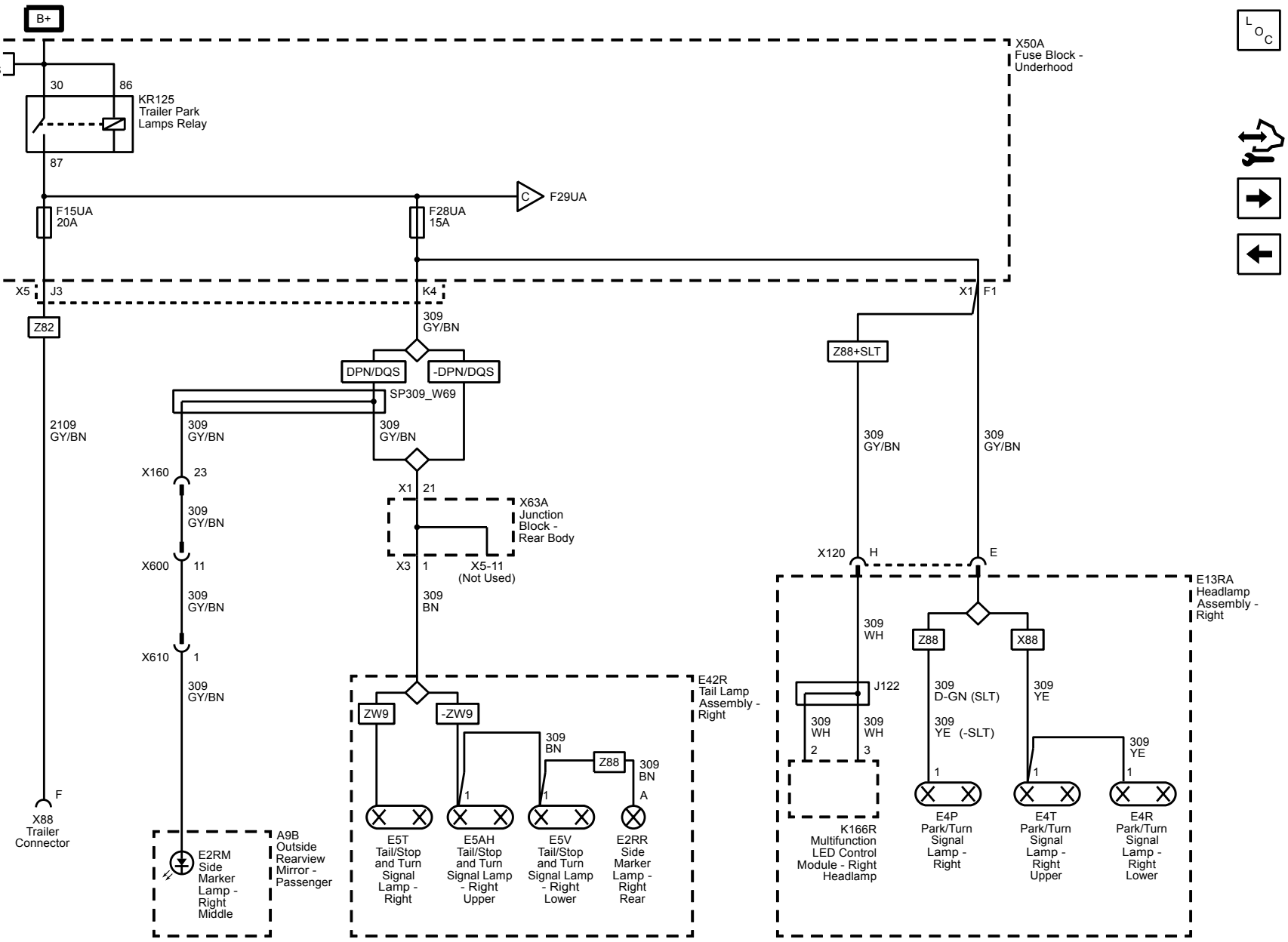

# F29UA Fuse (1500)

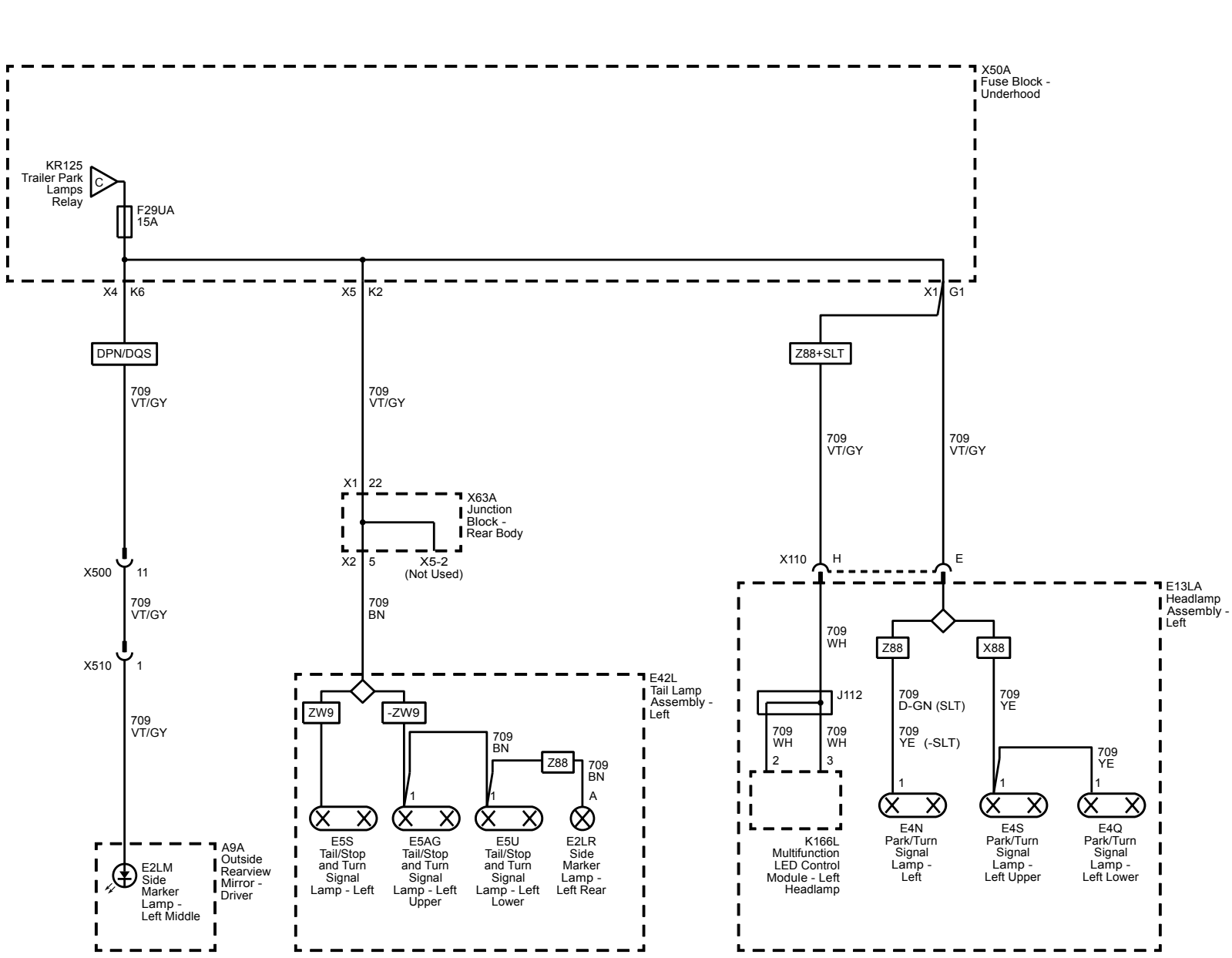

# F16UA, F33UA, F38UA and F49UA Fuses (1500)

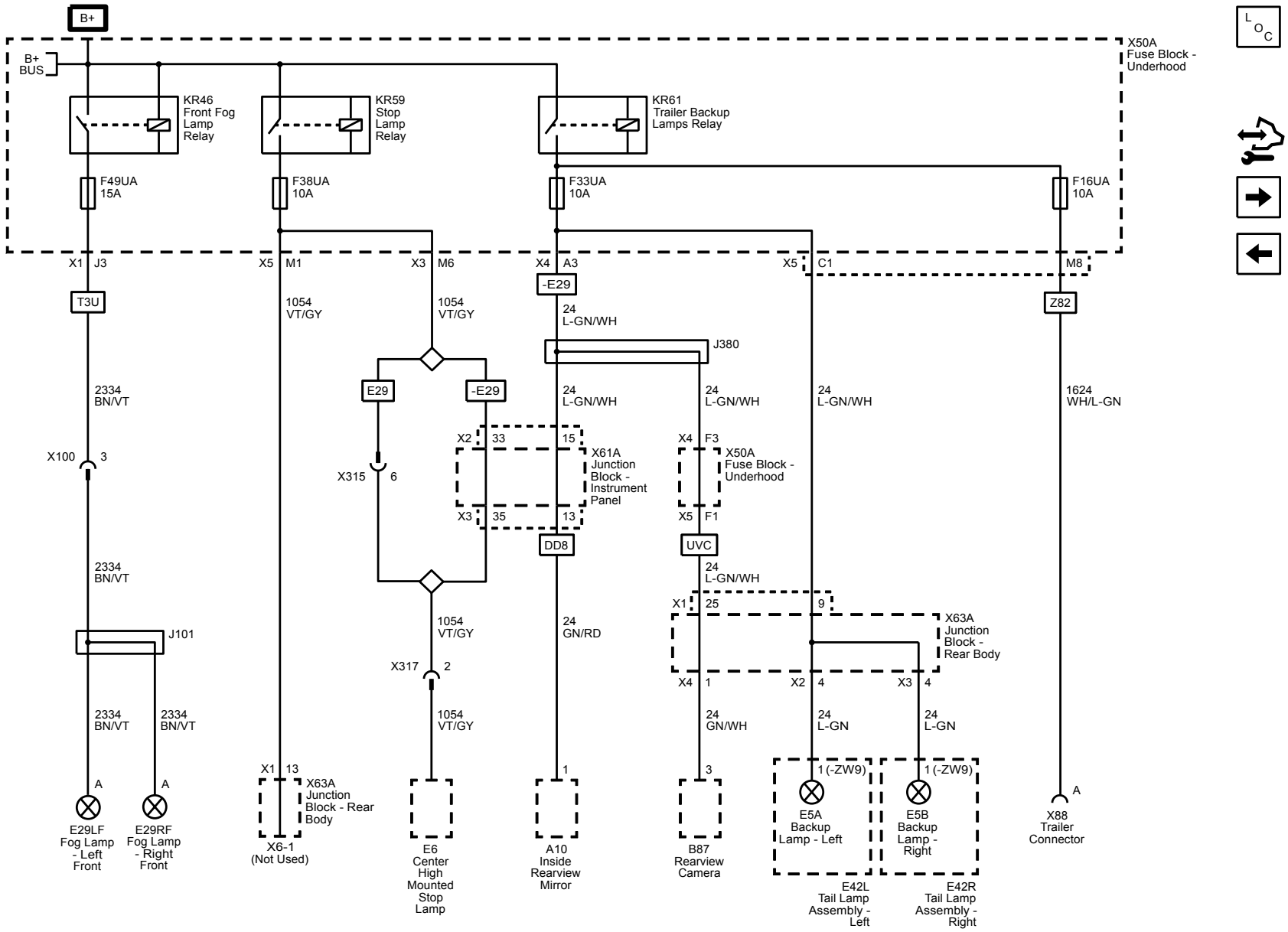

# F22UA, F23UA, F26UA, F27UA, F30UA, F31UA, F32UA, F34UA, F37UA and F40UA Fuses (1500)

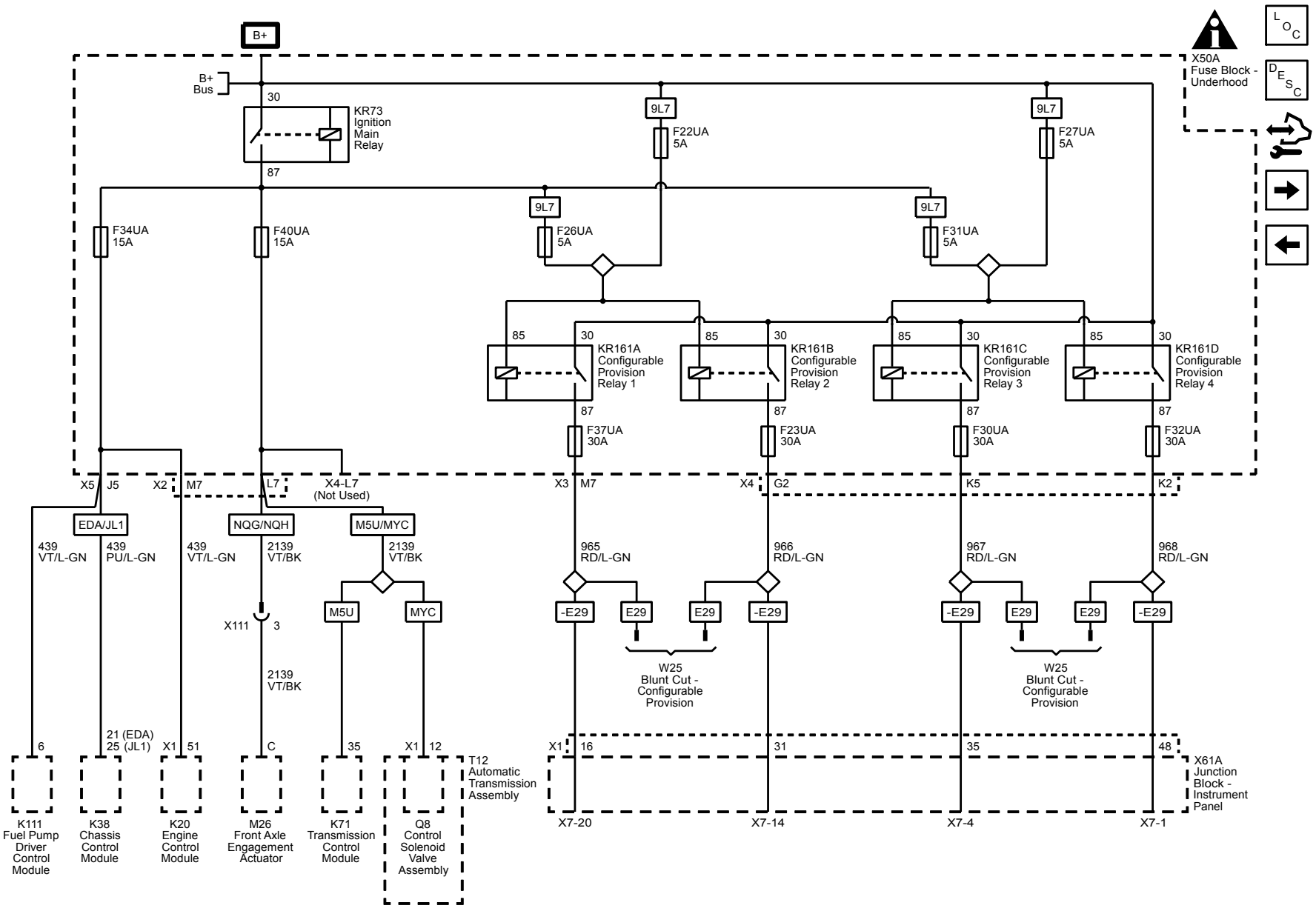

# F35UA, F44UA, F45UA and F51UA Fuses (1500)

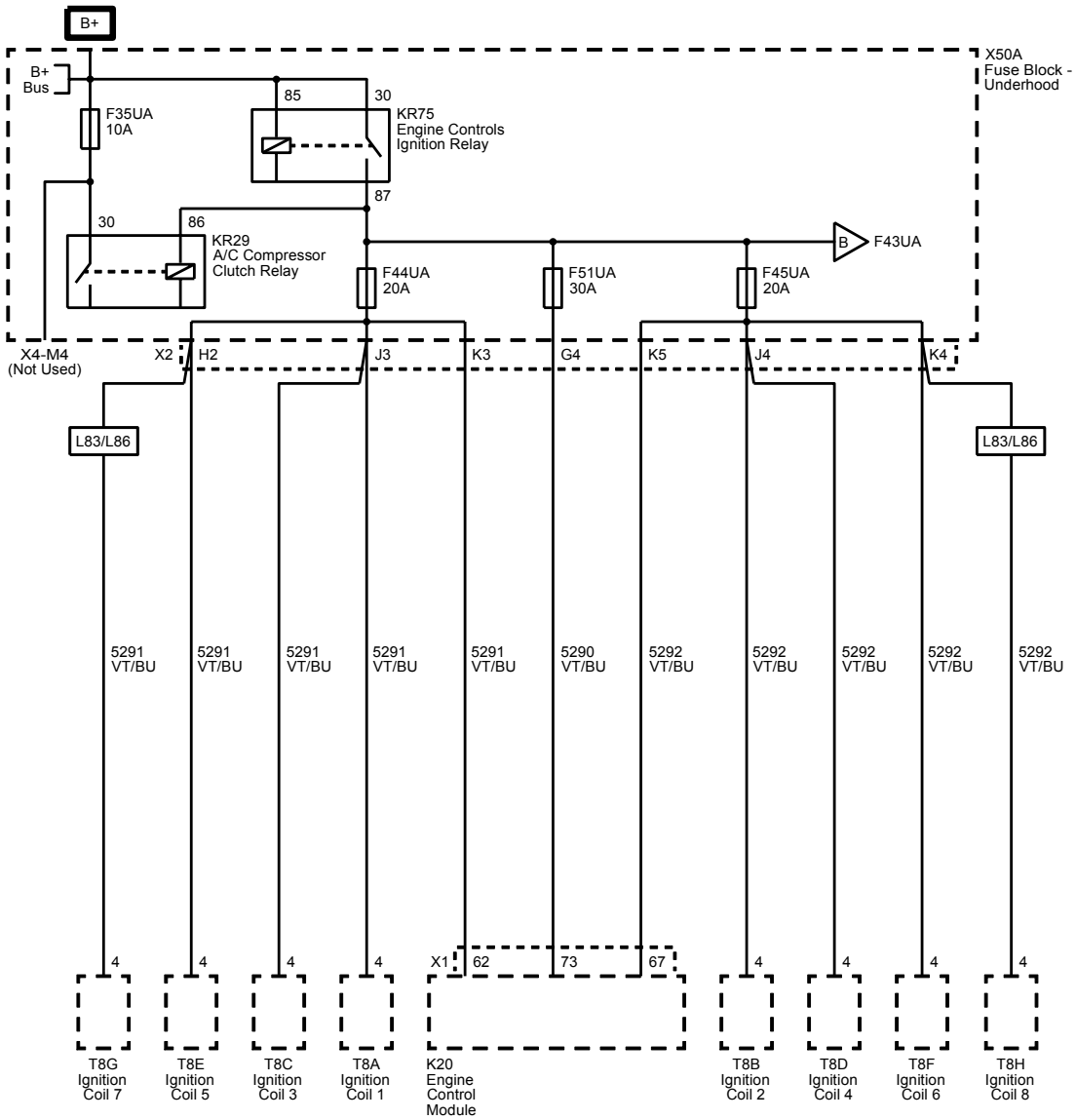

# F43UA, F46UA and F50UA Fuses (1500)

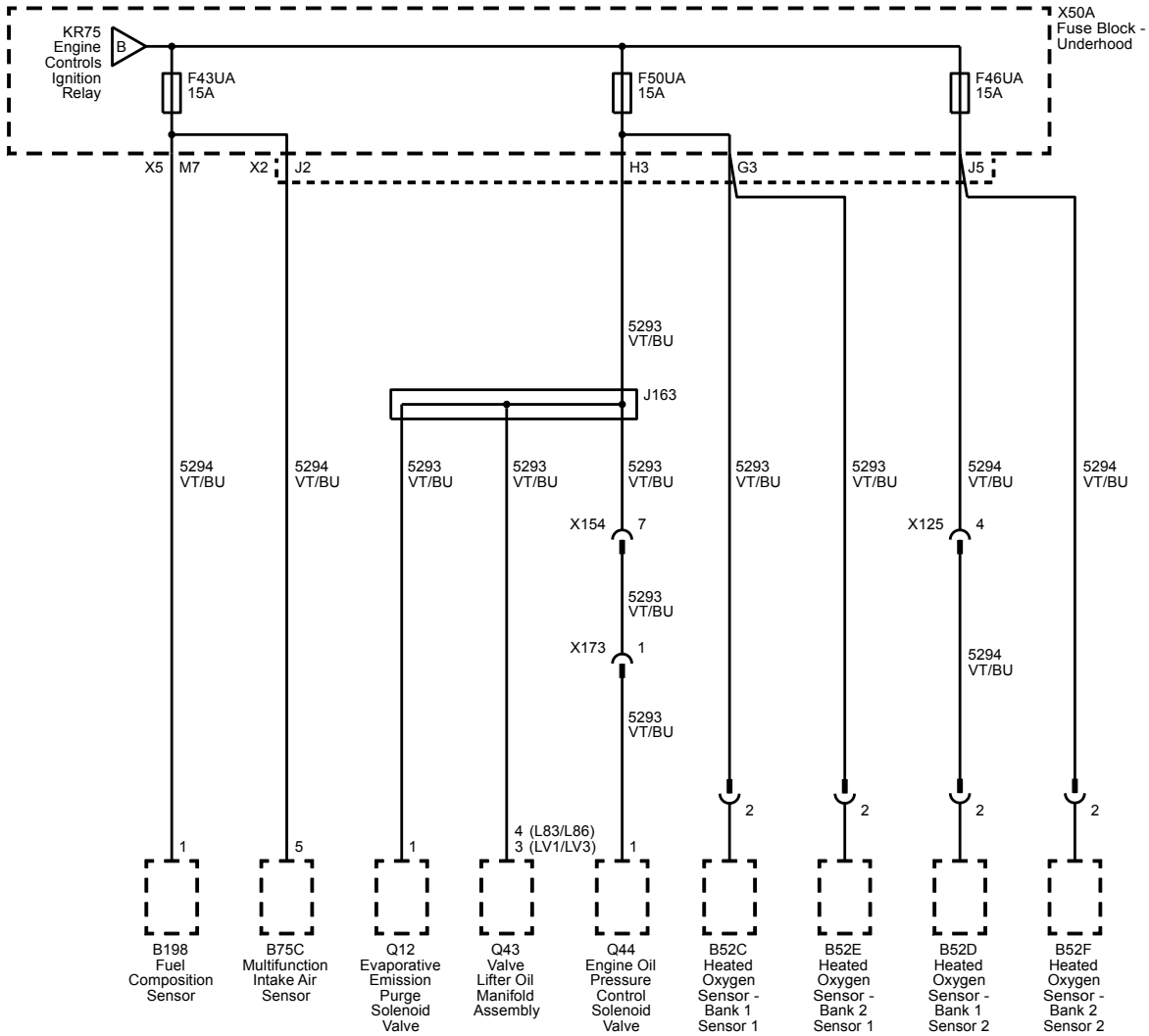

## B+ Bus X51L Fuse Block - Instrument Panel Left (1500)

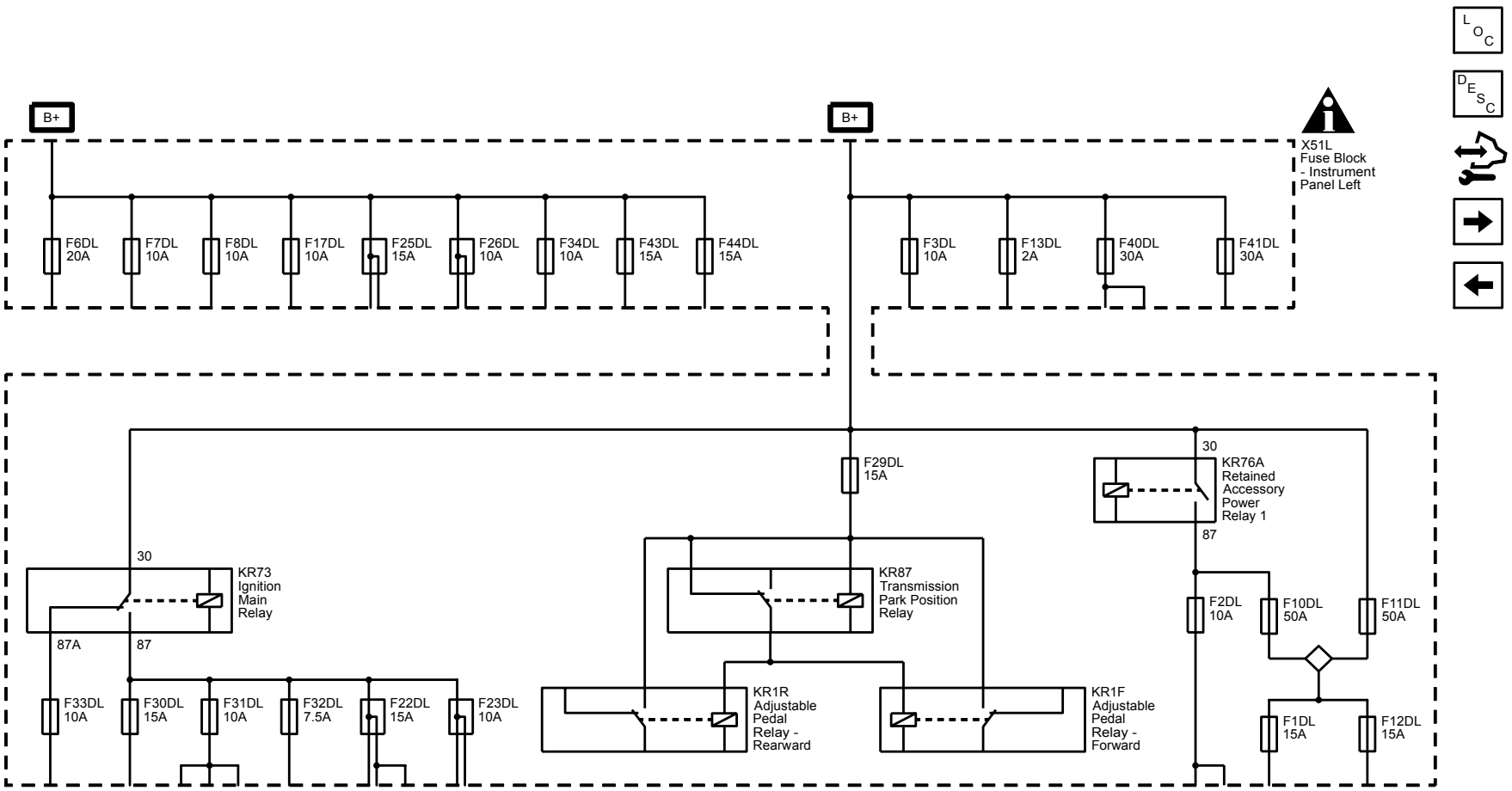

# F6DL, F7DL, F8DL, F17DL, F25DL, F26DL, F34DL, F43DL and F44DL Fuses (1500)

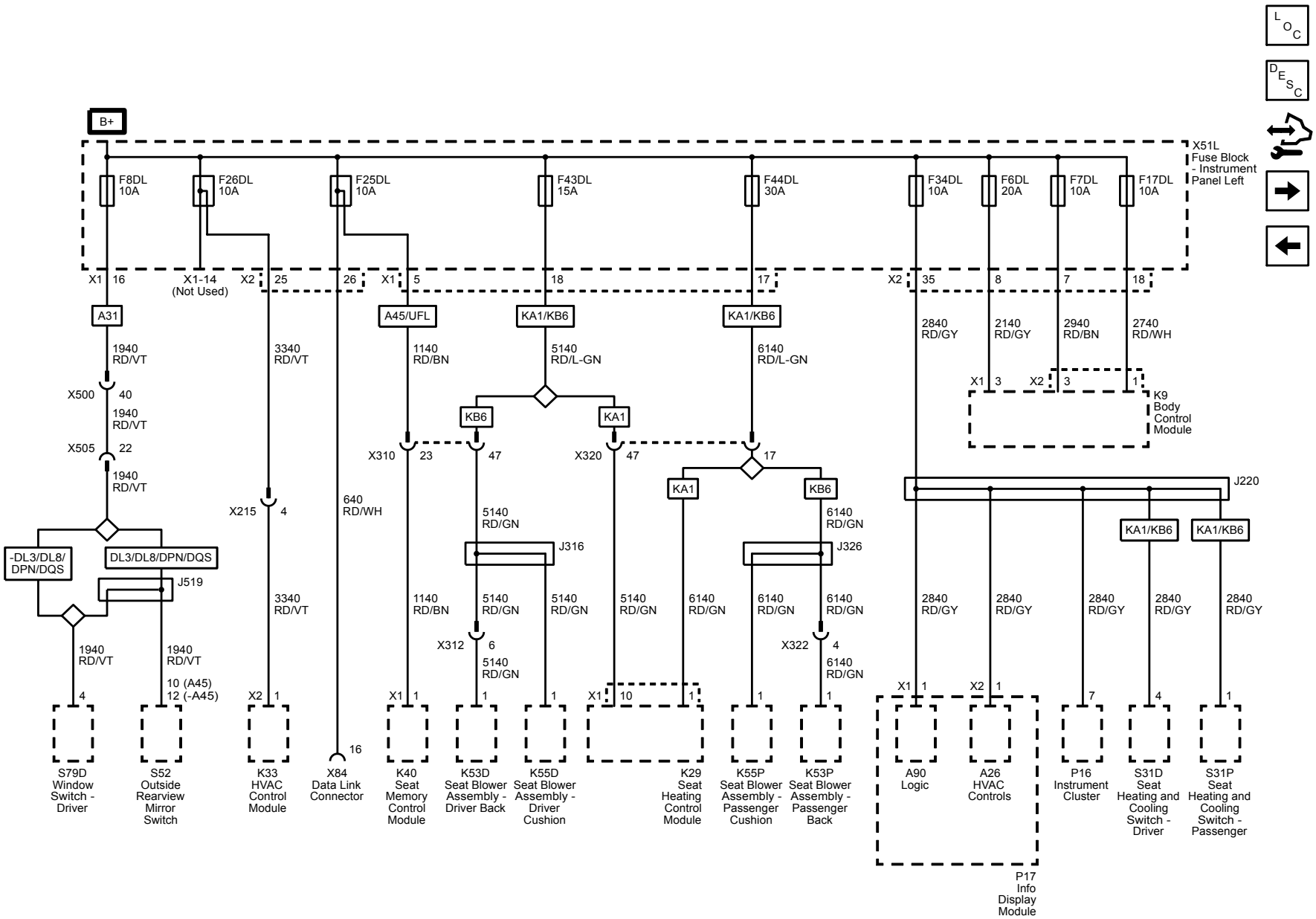

# F14DL, F22DL, F23DL, F30DL, F31DL, F32DL and F33DL Fuses (1500)

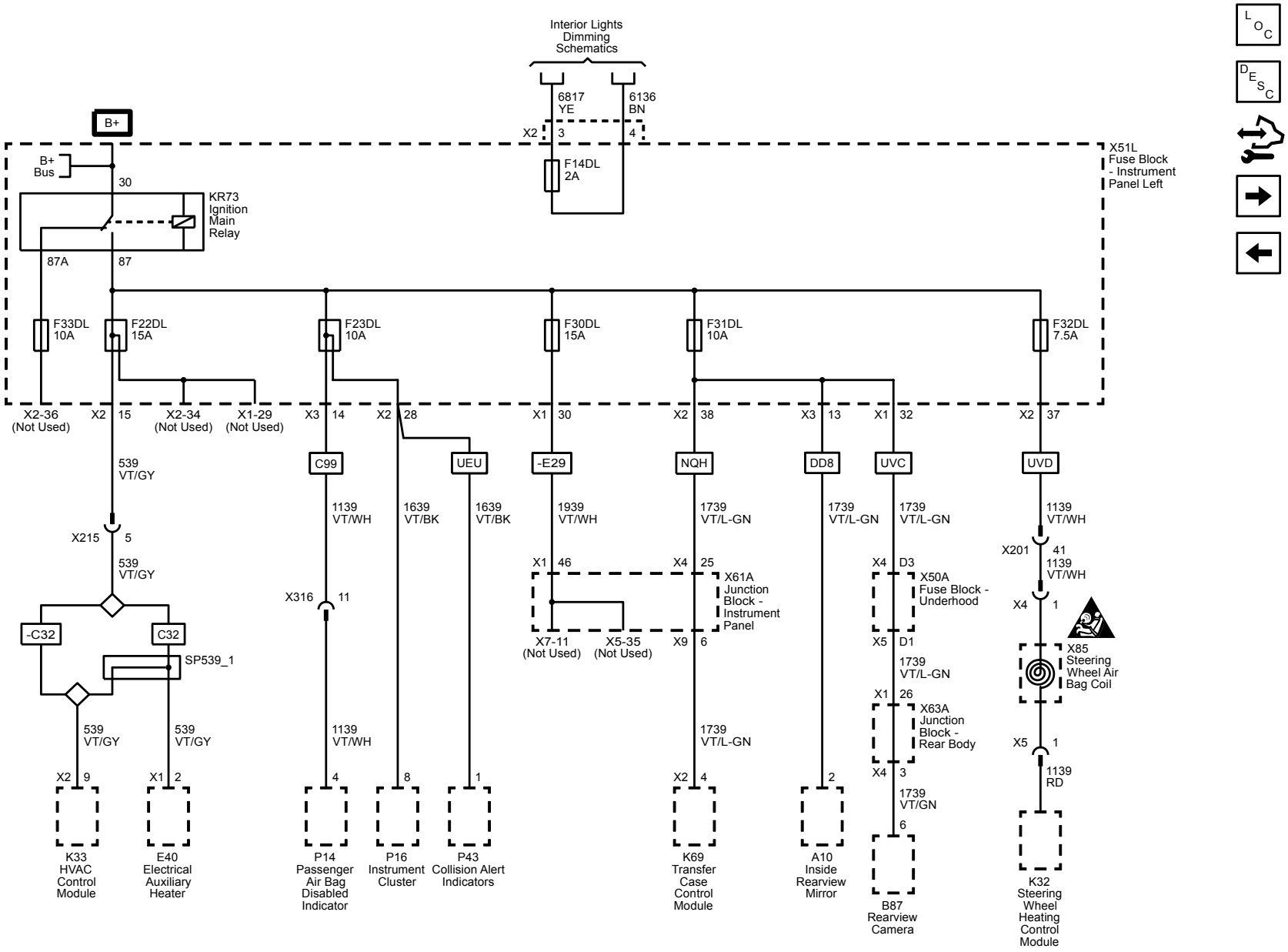

# F1DL, F2DL, F3DL, F10DL, F11DL, F12DL, F13DL, F40DL and F41DL Fuses (1500)

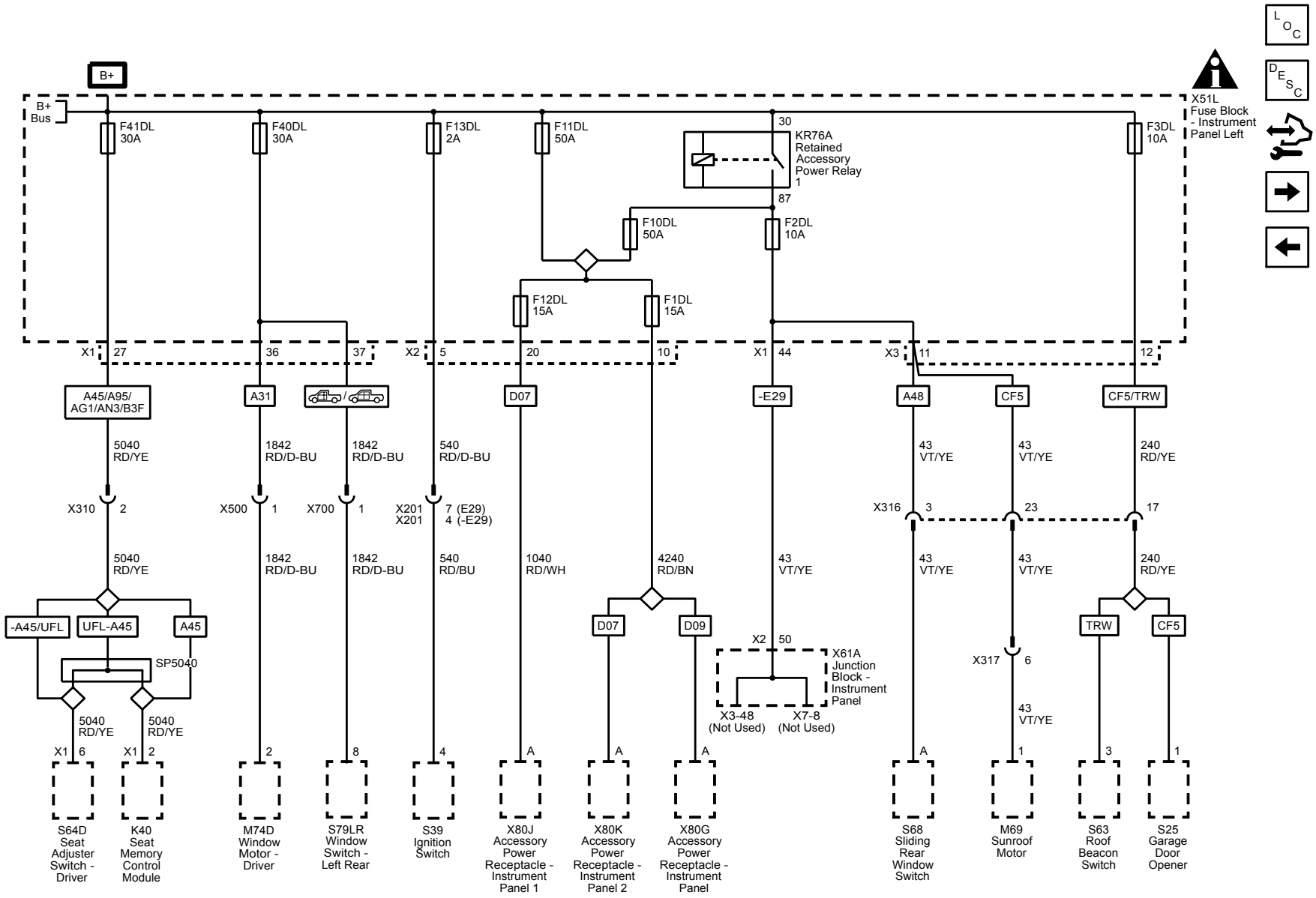

## B+ Bus X51R Fuse Block - Instrument Panel Right (1500)

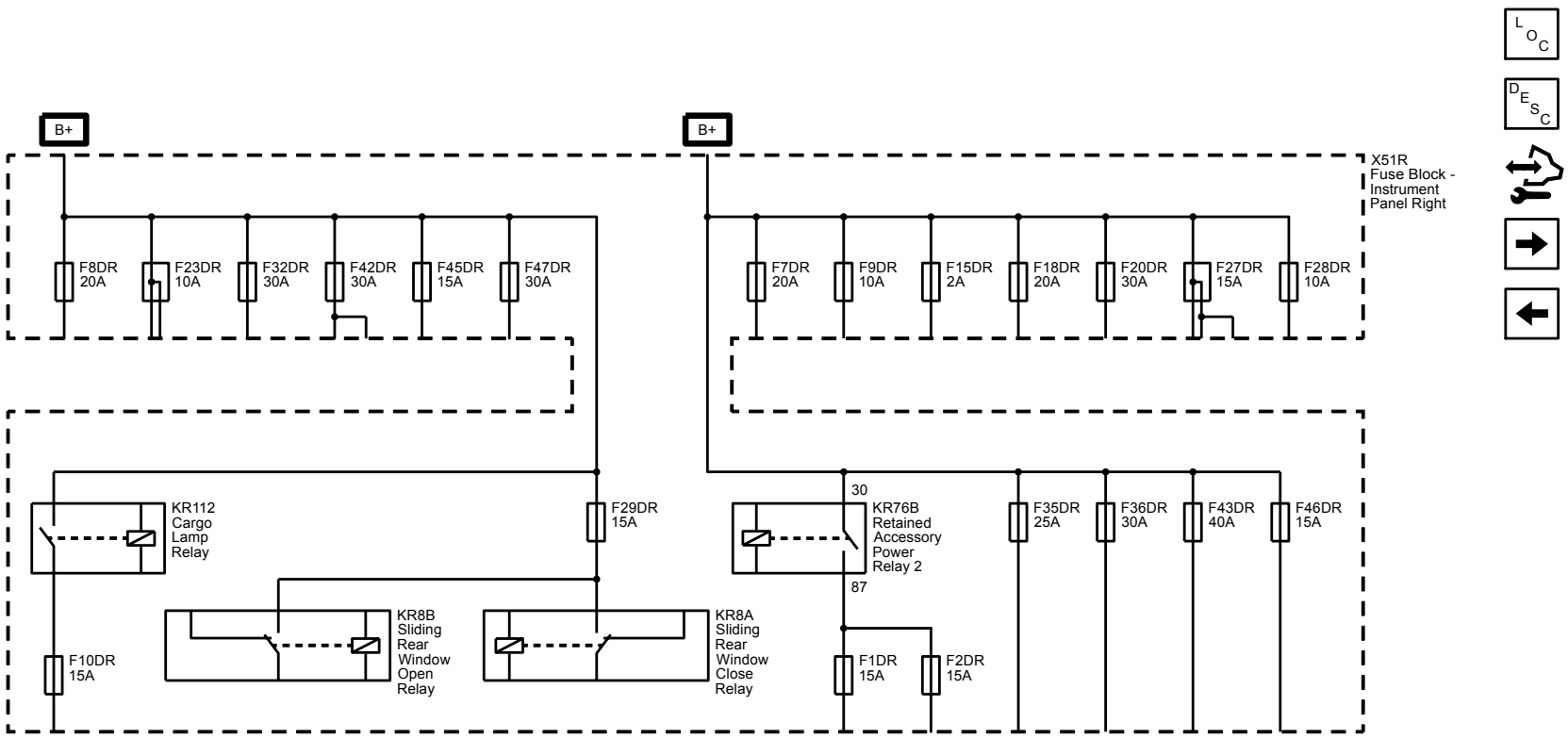

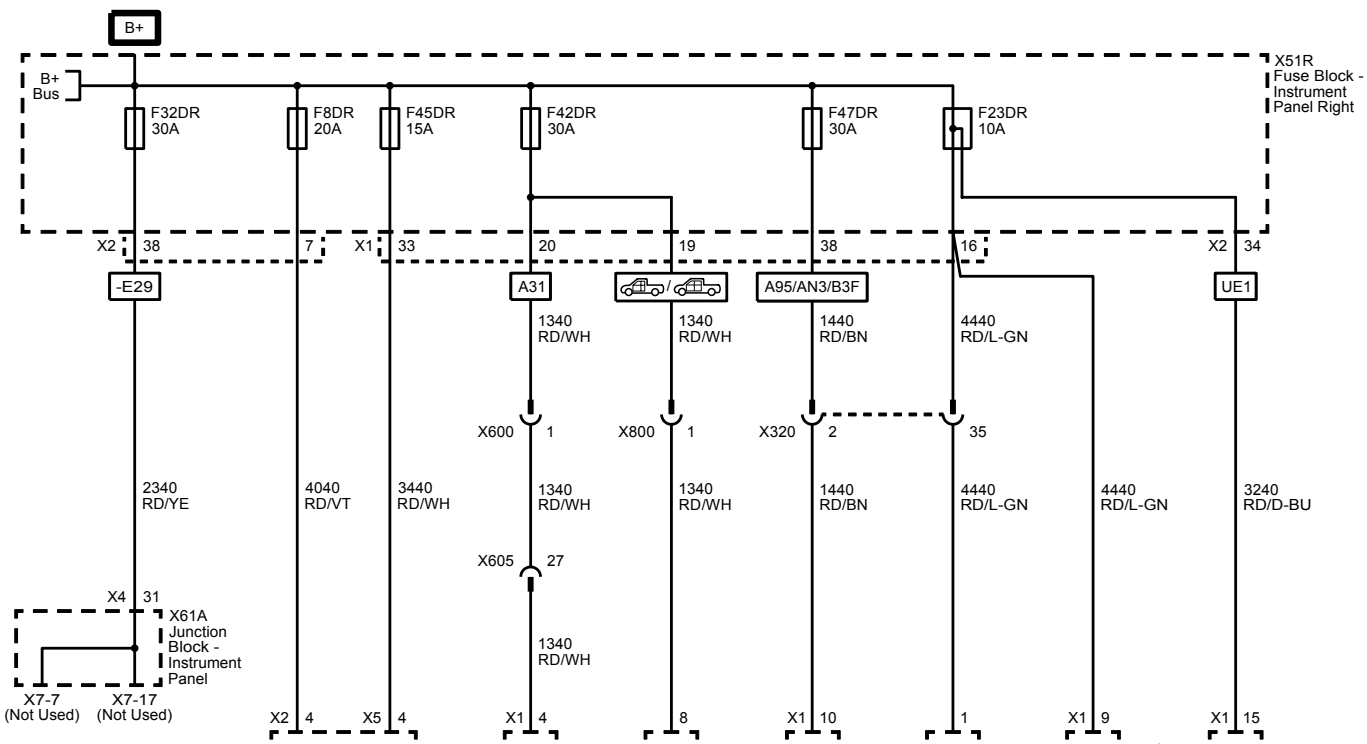
B+
B+ Bus
F32DR 30A
F8DR 20A
F45DR 15A
F42DR 30A
F47DR 30A
F23DR 10A
X51R Fuse Block - Instrument Panel Right
X2 38
7
X1 33
20
19
38
16
X2 34
-E29
A31
A95/AN3/B3F
UE1
1340 RD/WH
1340 RD/WH
1440 RD/BN
4440 RD/L-GN
X600 1
X800 1
X320 2
35
2340 RD/YE
4040 RD/VT
3440 RD/WH
1340 RD/WH
1340 RD/WH
1440 RD/BN
4440 RD/L-GN
4440 RD/L-GN
3240 RD/D-BU
X605 27
1340 RD/WH
X4 31
X61A Junction Block - Instrument Panel
X7-7 (Not Used)
X7-17 (Not Used)
X2 4
X5 4
X1 4
X1 8
X1 10
1
X1 9
X1 15
K9 Body Control Module
S79P Window Switch - Passenger
S79RR Window Switch - Right Rear
S64P Seat Adjuster Switch - Passenger
K85 Passenger Presence Module
K36 Inflatable Restraint Sensing and Diagnostic Module
K73 Telematics Communication Interface Control Module

# F1DR, F2DR, F7DR, F9DR, F20DR, F28DR, F35DR, F36DR, F43DR and F46DR Fuses (1500)

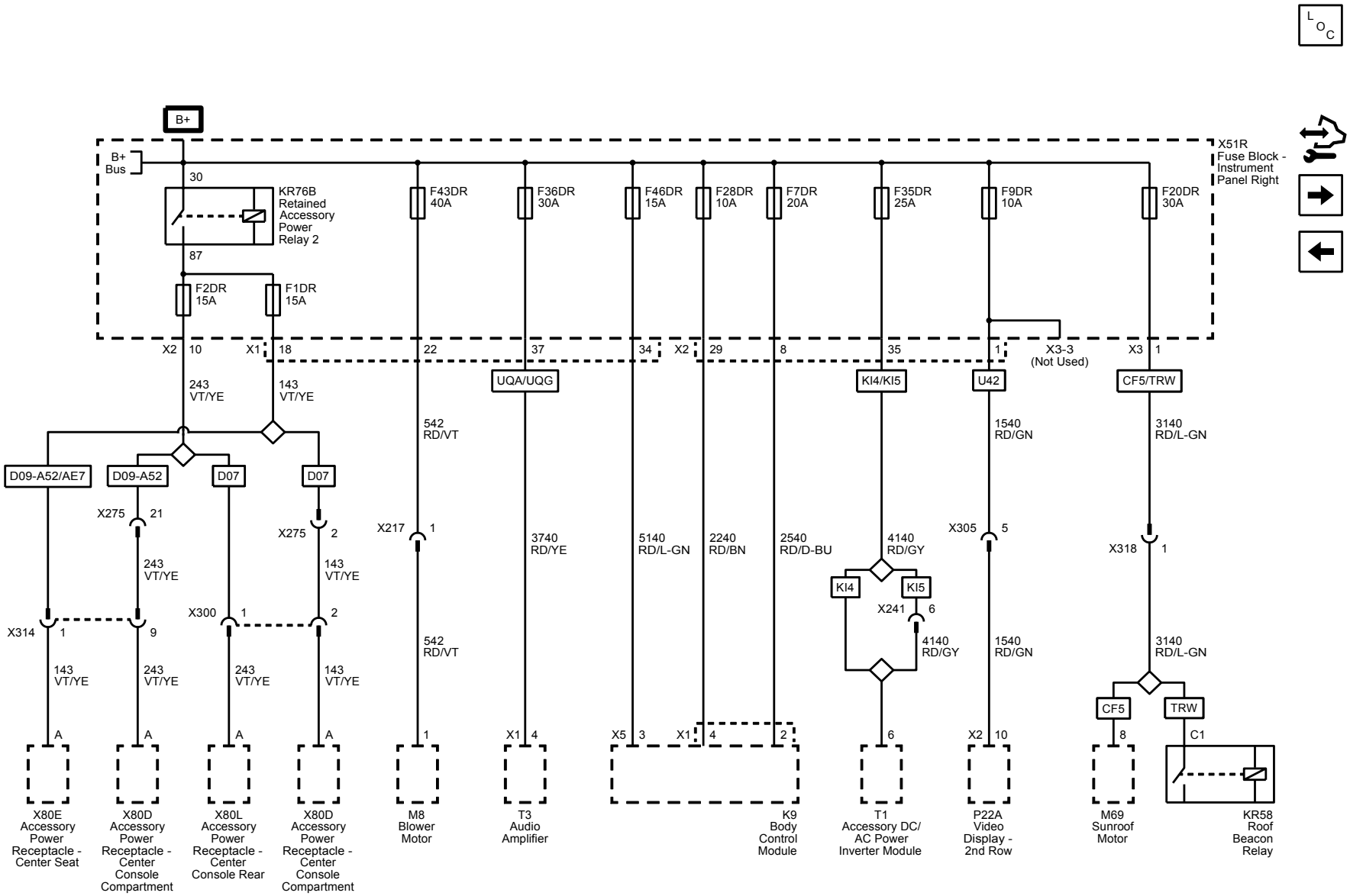

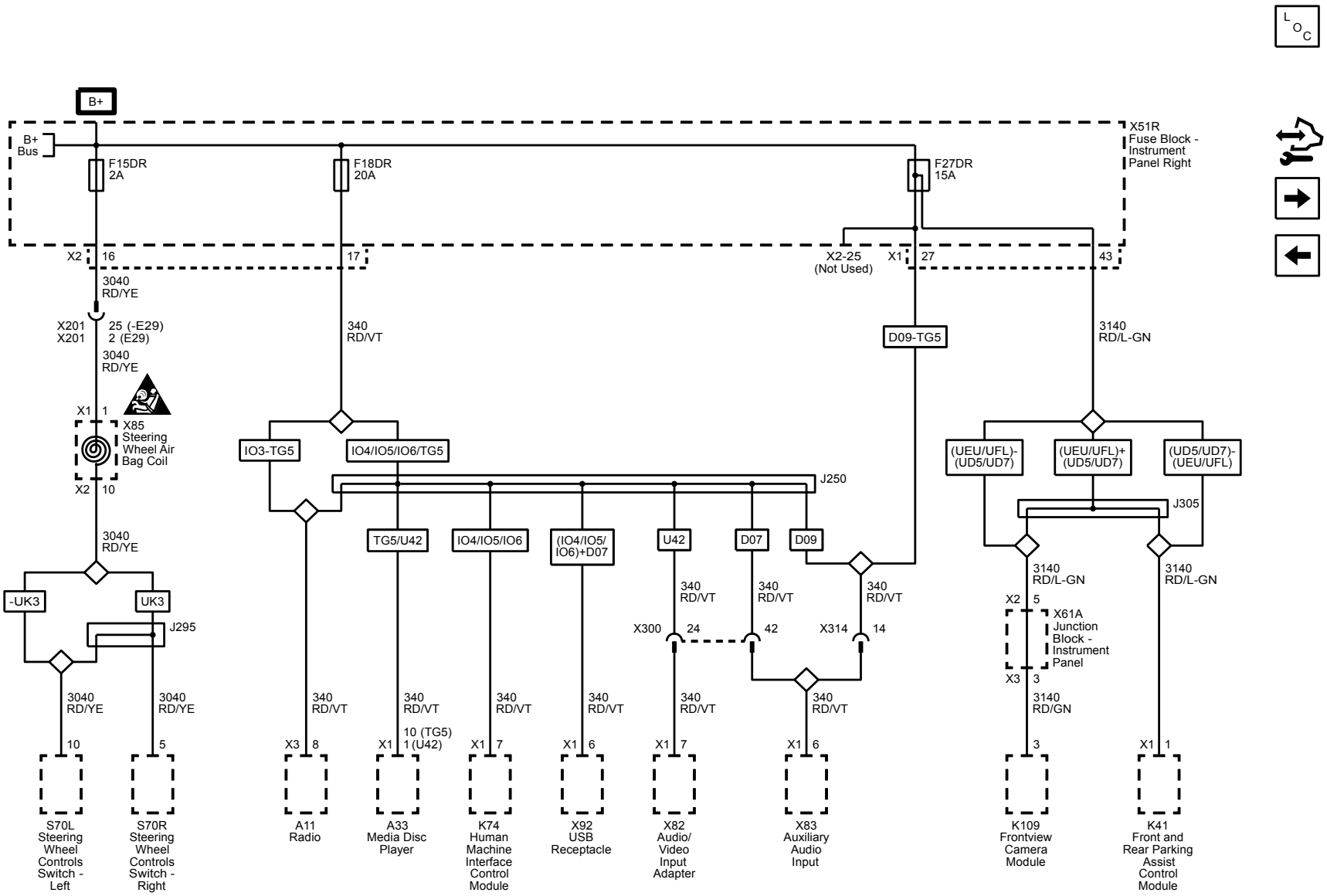
B+
B+ Bus
F15DR 2A
F18DR 20A
F27DR 15A
X51R Fuse Block - Instrument Panel Right
X2 16
17
X2-25 (Not Used)
X1 27
43
3040 RD/YE
X201 25 (-E29)
X201 2 (E29)
3040 RD/YE
X1 1
X85 Steering Wheel Air Bag Coil
X2 10
3040 RD/YE
340 RD/VT
D09-TG5
3140 RD/L-GN
IO3-TG5
IO4/IO5/IO6/TG5
J250
TG5/U42
IO4/IO5/IO6
(IO4/IO5/ IO6)+D07
U42
D07
D09
(UEU/UFL)- (UD5/UD7)
(UEU/UFL)+ (UD5/UD7)
(UD5/UD7)- (UEU/UFL)
J305
-UK3
UK3
J295
X300 24
42
X314 14
X2 5
X61A Junction Block - Instrument Panel
X3 3
3140 RD/GN
10
5
X3 8
X1 10 (TG5) 1 (U42)
X1 7
X1 6
X1 1
S70L Steering Wheel Controls Switch - Left
S70R Steering Wheel Controls Switch - Right
A11 Radio
A33 Media Disc Player
K74 Human Machine Interface Control Module
X92 USB Receptacle
X82 Audio/ Video Input Adapter
X83 Auxiliary Audio Input
K109 Frontview Camera Module
K41 Front and Rear Parking Assist Control Module

# F10DR Fuse (1500)

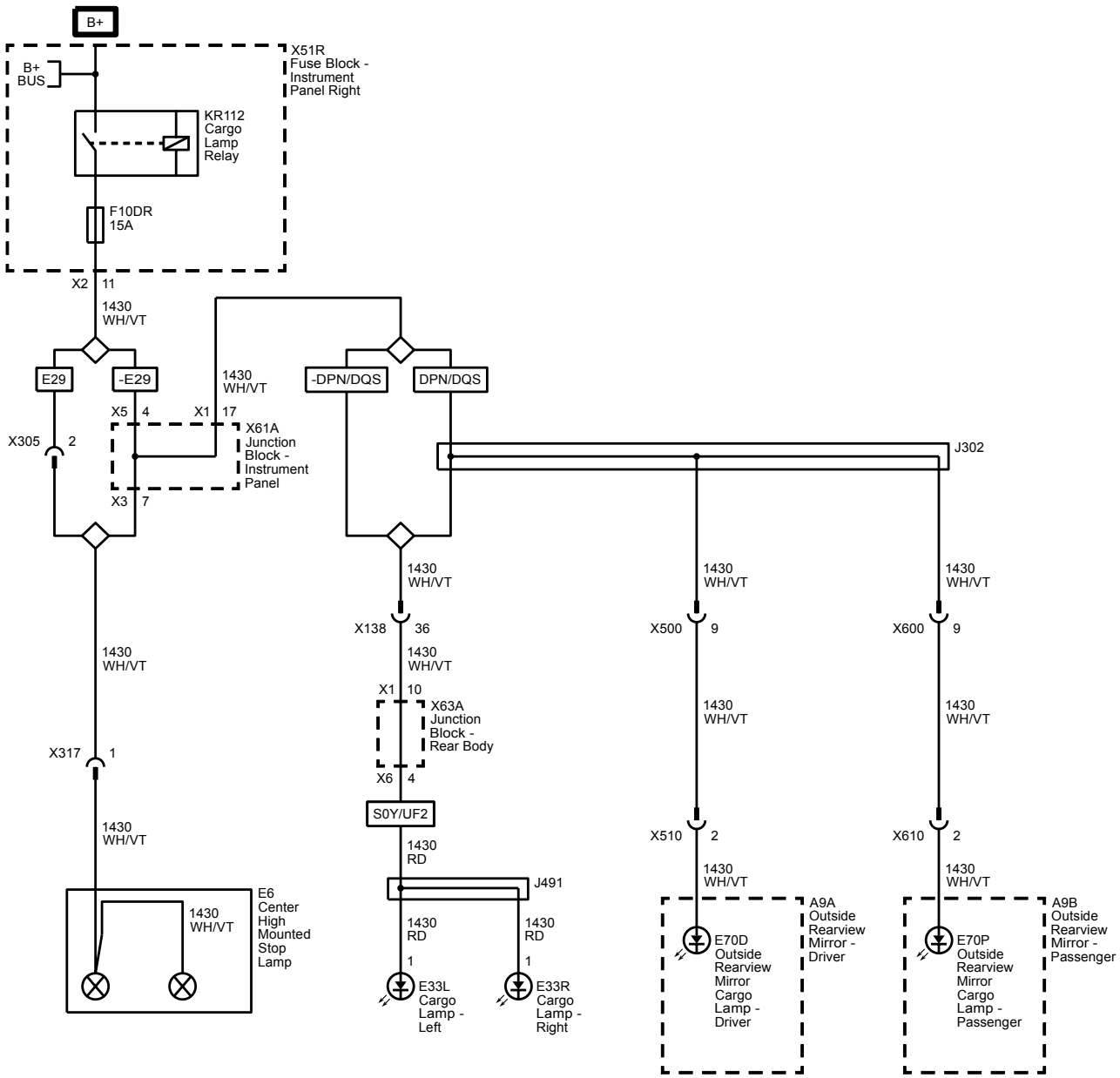

## Ignition Switch and Ignition Power

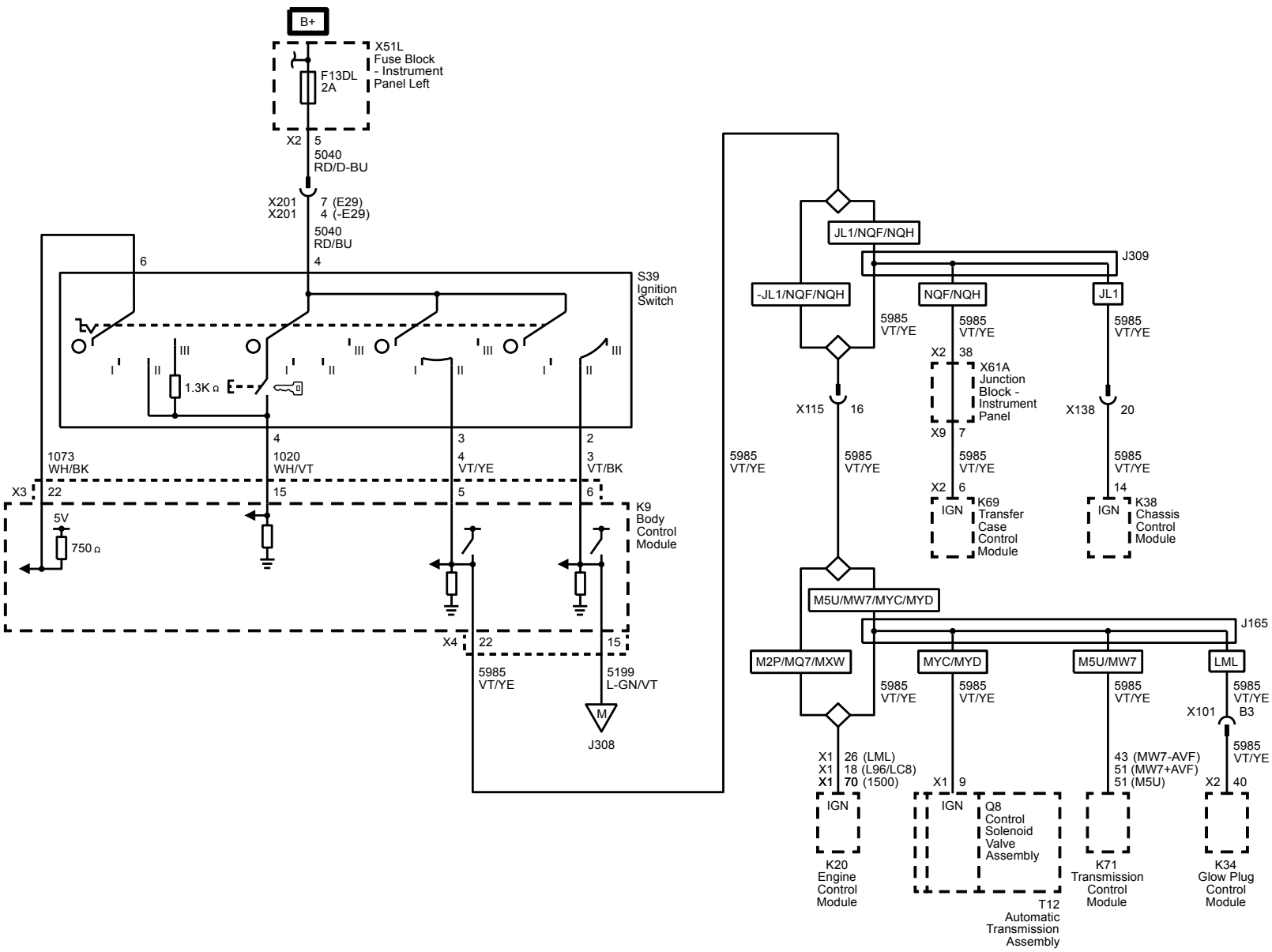

# Ignition Main Relays

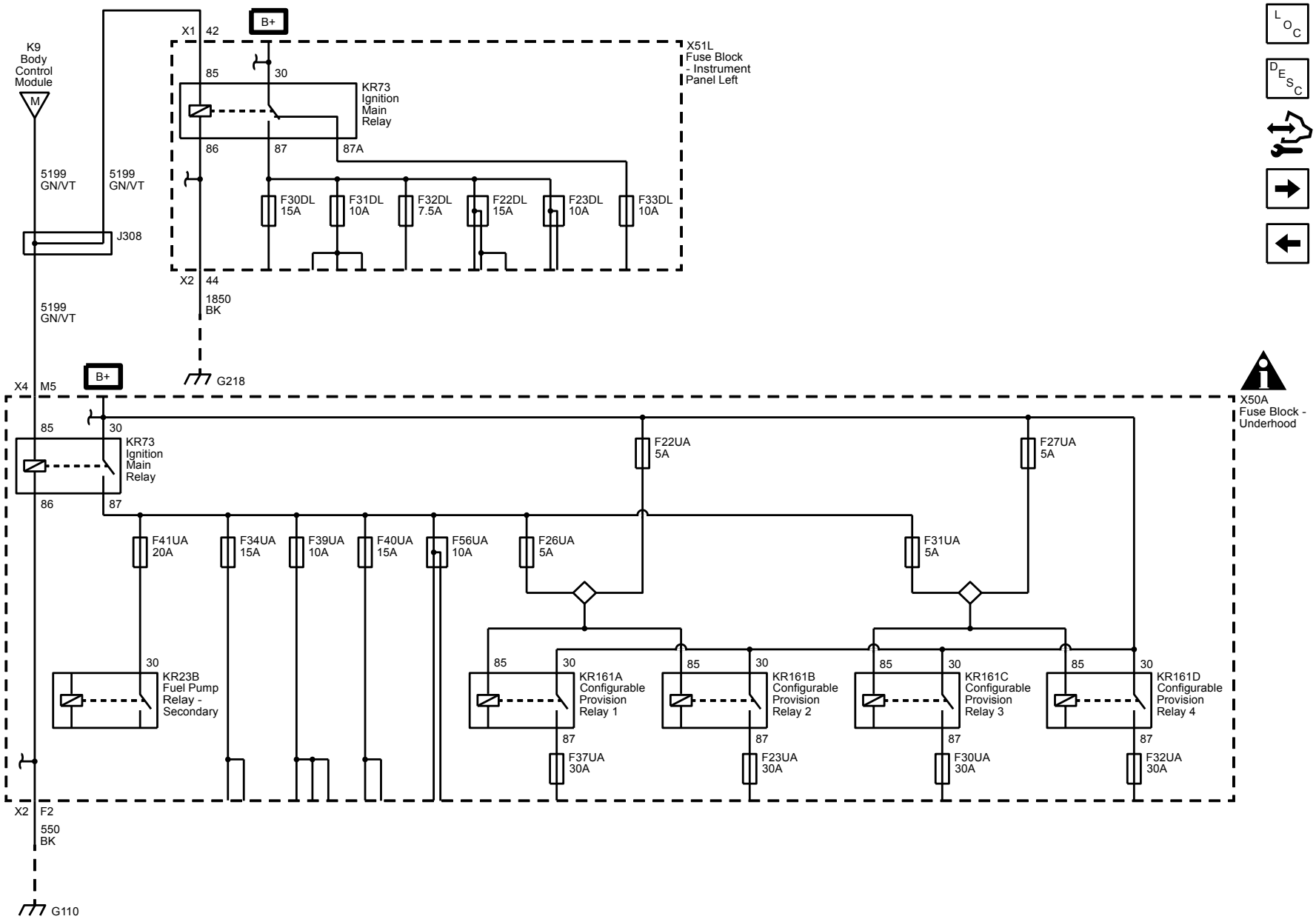

# Retained Accessory Power Relays

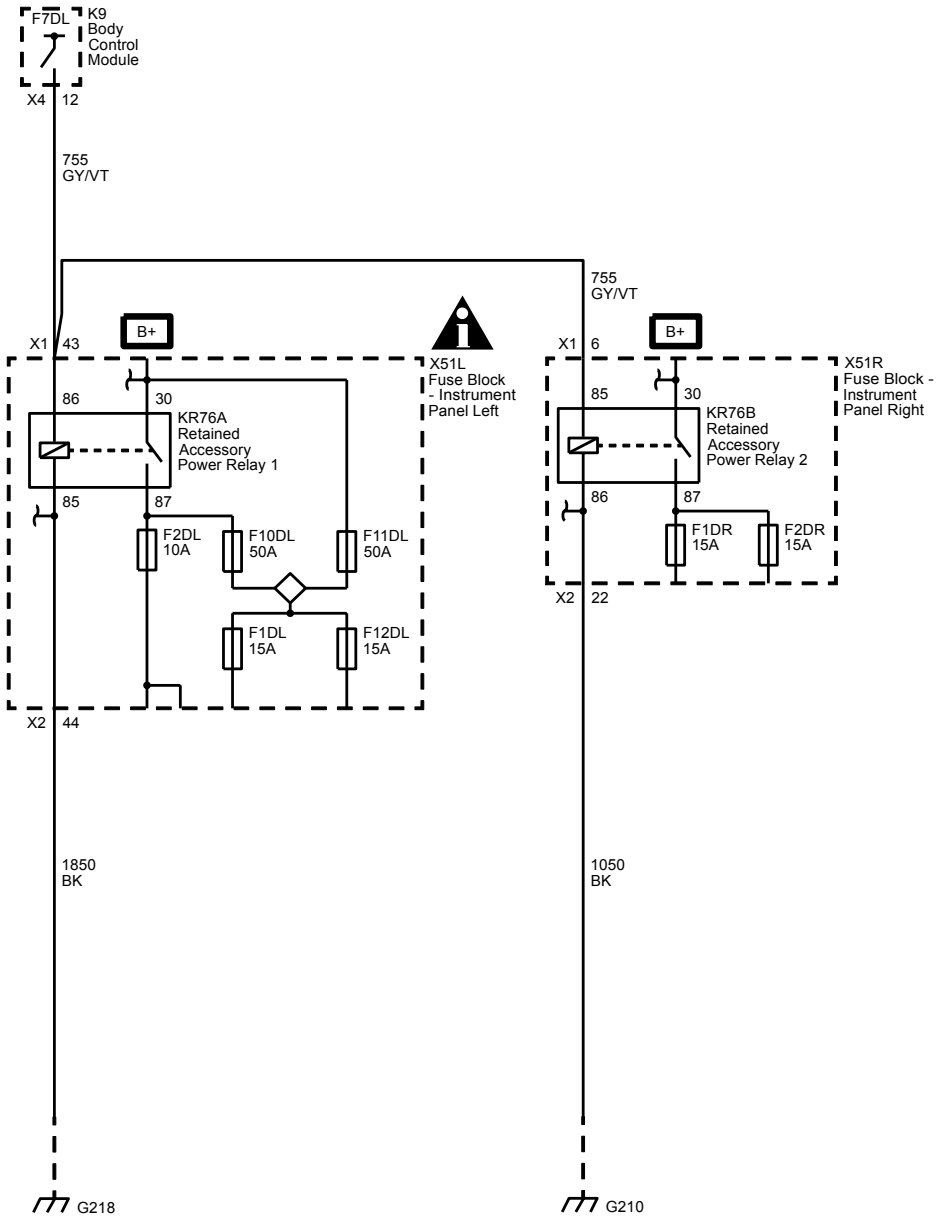

## G101 and G102

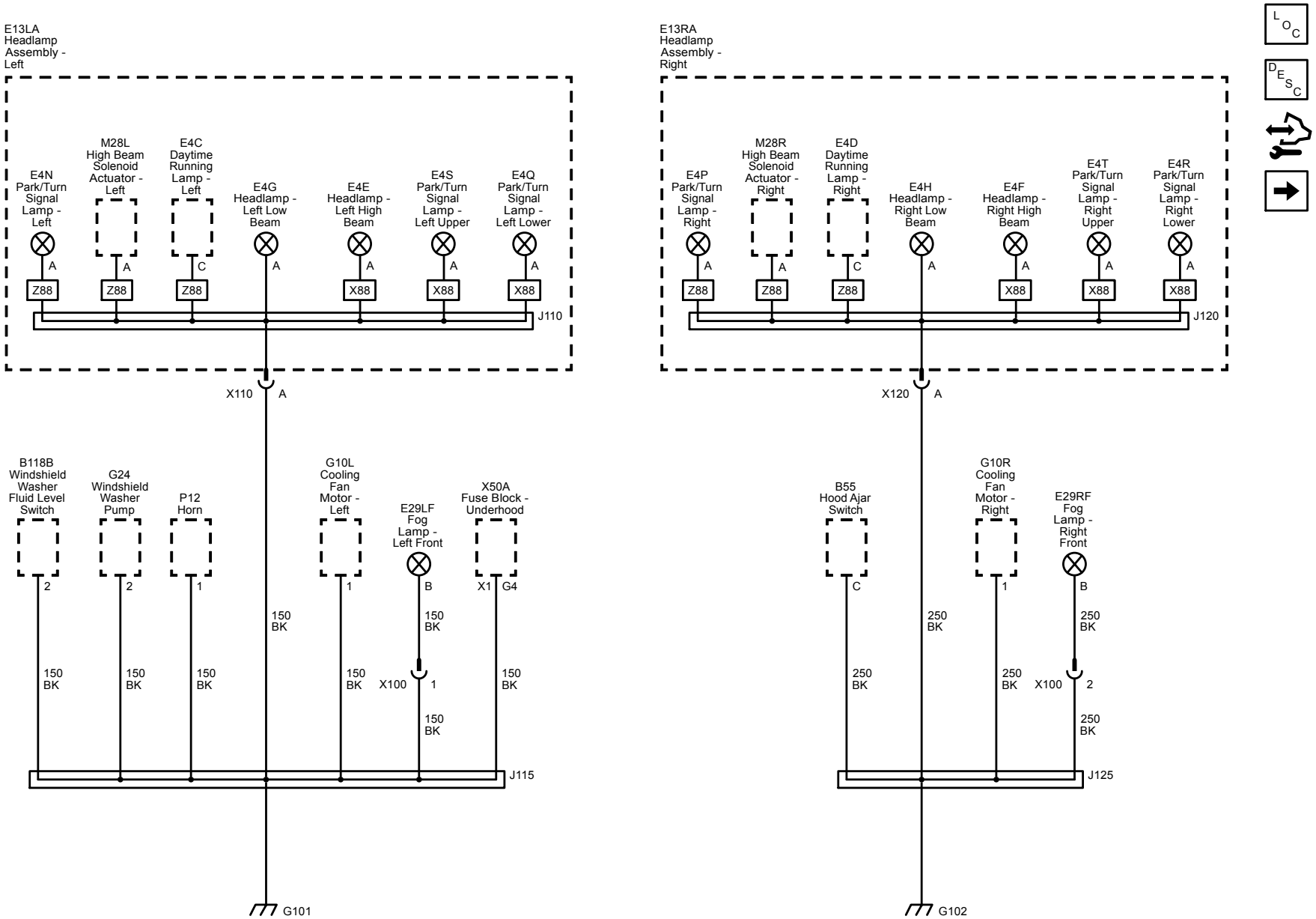

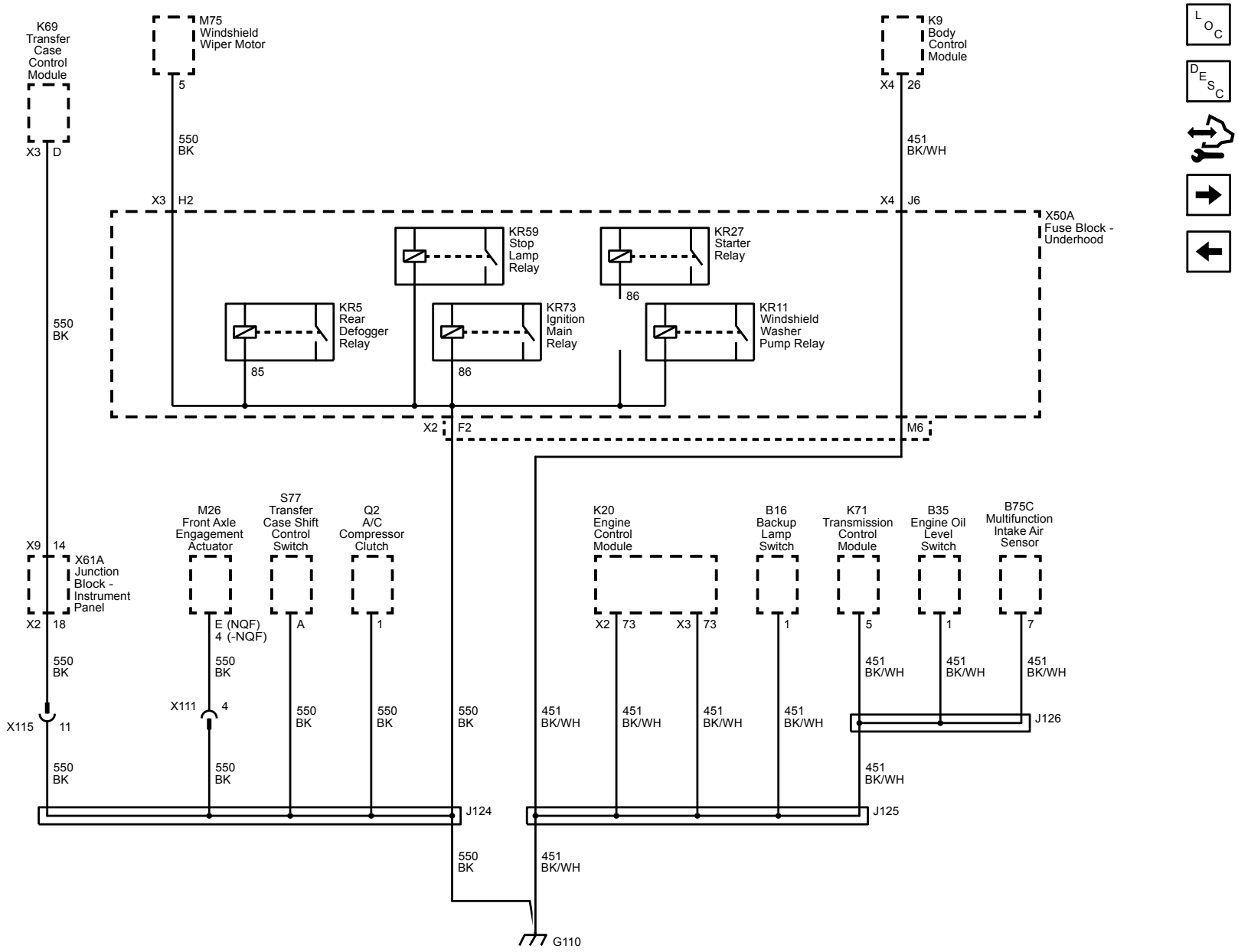
K69
Transfer
Case
Control
Module
X3 D
M75
Windshield
Wiper Motor
5
550
BK
X3 H2
K9
Body
Control
Module
X4 26
451
BK/WH
X4 J6
X50A
Fuse Block -
Underhood
KR59
Stop
Lamp
Relay
KR27
Starter
Relay
86
KR5
Rear
Defogger
Relay
85
KR73
Ignition
Main
Relay
86
KR11
Windshield
Washer
Pump Relay
550
BK
X2 F2
M6
X9 14
X61A
Junction
Block -
Instrument
Panel
X2 18
550
BK
X115 11
M26
Front Axle
Engagement
Actuator
E (NQF)
4 (-NQF)
550
BK
X111 4
S77
Transfer
Case Shift
Control
Switch
A
550
BK
Q2
A/C
Compressor
Clutch
1
550
BK
550
BK
K20
Engine
Control
Module
X2 73
X3 73
451
BK/WH
451
BK/WH
B16
Backup
Lamp
Switch
1
451
BK/WH
K71
Transmission
Control
Module
5
451
BK/WH
B35
Engine Oil
Level
Switch
1
451
BK/WH
B75C
Multifunction
Intake Air
Sensor
7
451
BK/WH
J126
451
BK/WH
J124
J125
550
BK
451
BK/WH
G110

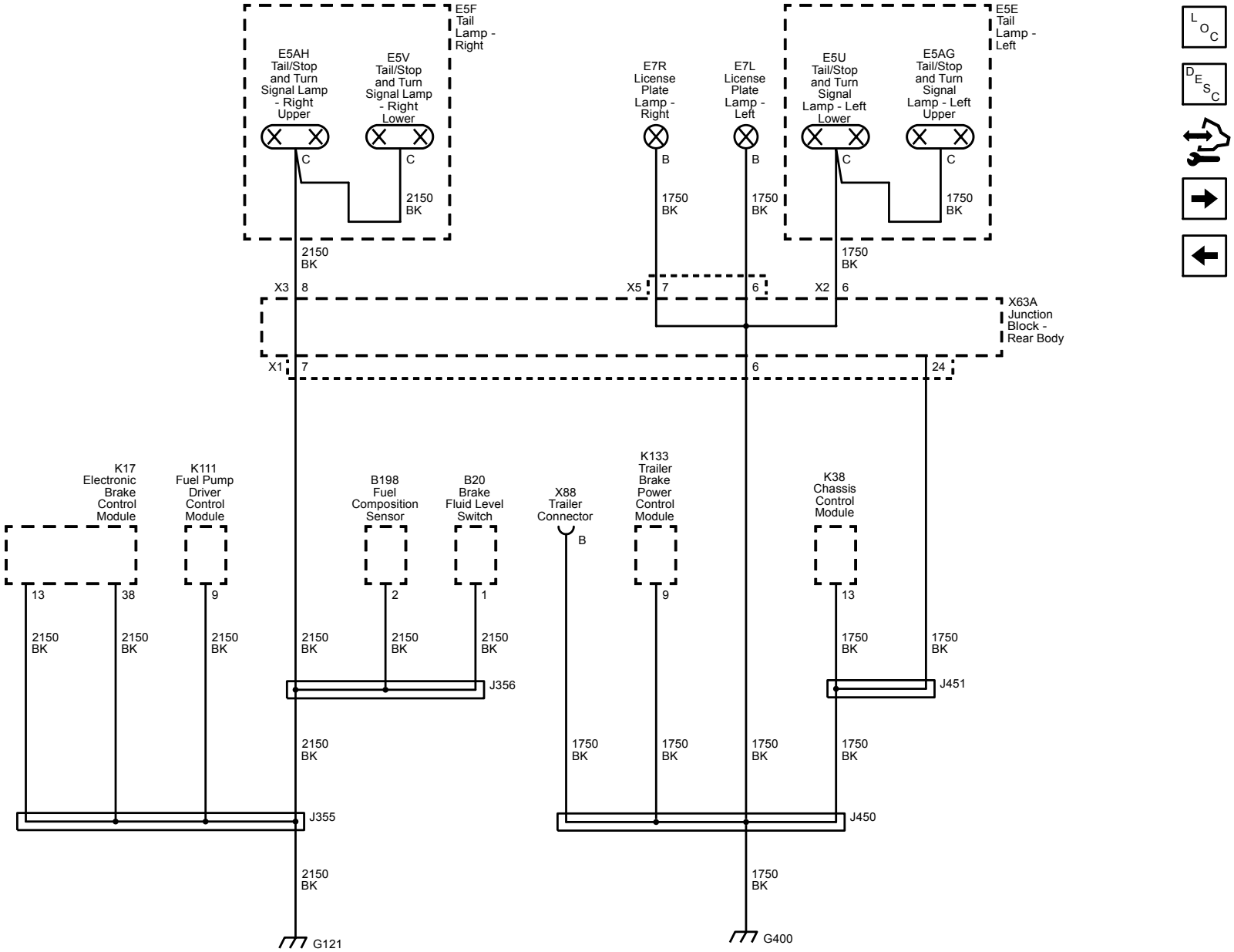
E5F
Tail
Lamp -
Right
E5AH
Tail/Stop
and Turn
Signal Lamp
- Right
Upper
E5V
Tail/Stop
and Turn
Signal Lamp
- Right
Lower
C
C
2150
BK
E7R
License
Plate
Lamp -
Right
E7L
License
Plate
Lamp -
Left
B
B
1750
BK
1750
BK
E5E
Tail
Lamp -
Left
E5U
Tail/Stop
and Turn
Signal
Lamp - Left
Lower
E5AG
Tail/Stop
and Turn
Signal
Lamp - Left
Upper
C
C
1750
BK
1750
BK
2150
BK
X3
8
X5
7
6
X2
6
X63A
Junction
Block -
Rear Body
X1
7
6
24
K17
Electronic
Brake
Control
Module
K111
Fuel Pump
Driver
Control
Module
B198
Fuel
Composition
Sensor
B20
Brake
Fluid Level
Switch
X88
Trailer
Connector
B
K133
Trailer
Brake
Power
Control
Module
K38
Chassis
Control
Module
13
38
9
2
1
9
13
2150
BK
2150
BK
2150
BK
2150
BK
2150
BK
2150
BK
1750
BK
1750
BK
J356
J451
2150
BK
1750
BK
1750
BK
1750
BK
1750
BK
J355
J450
2150
BK
1750
BK
G121
G400

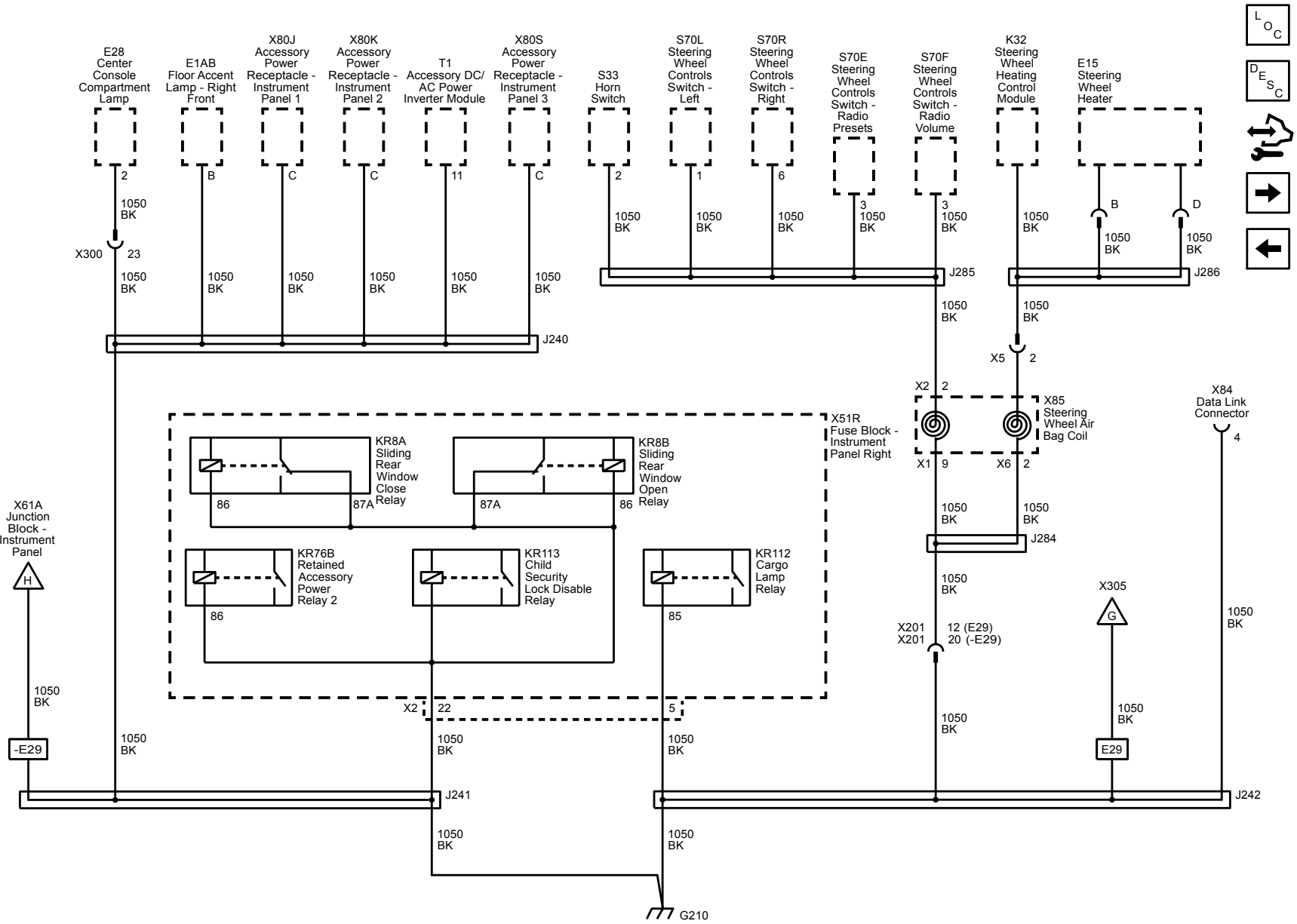
E28 Center Console Compartment Lamp
E1AB Floor Accent Lamp - Right Front
X80J Accessory Power Receptacle - Instrument Panel 1
X80K Accessory Power Receptacle - Instrument Panel 2
T1 Accessory DC/ AC Power Inverter Module
X80S Accessory Power Receptacle - Instrument Panel 3
S33 Horn Switch
S70L Steering Wheel Controls Switch - Left
S70R Steering Wheel Controls Switch - Right
S70E Steering Wheel Controls Switch - Radio Presets
S70F Steering Wheel Controls Switch - Radio Volume
K32 Steering Wheel Heating Control Module
E15 Steering Wheel Heater
X300
J240
J285
J286
X5
X2
X85 Steering Wheel Air Bag Coil
X1
X6
X84 Data Link Connector
X51R Fuse Block - Instrument Panel Right
KR8A Sliding Rear Window Close Relay
KR8B Sliding Rear Window Open Relay
KR76B Retained Accessory Power Relay 2
KR113 Child Security Lock Disable Relay
KR112 Cargo Lamp Relay
X61A Junction Block - Instrument Panel
-E29
J241
J242
J284
X201
12 (E29)
20 (-E29)
X305
E29
G210
1050 BK

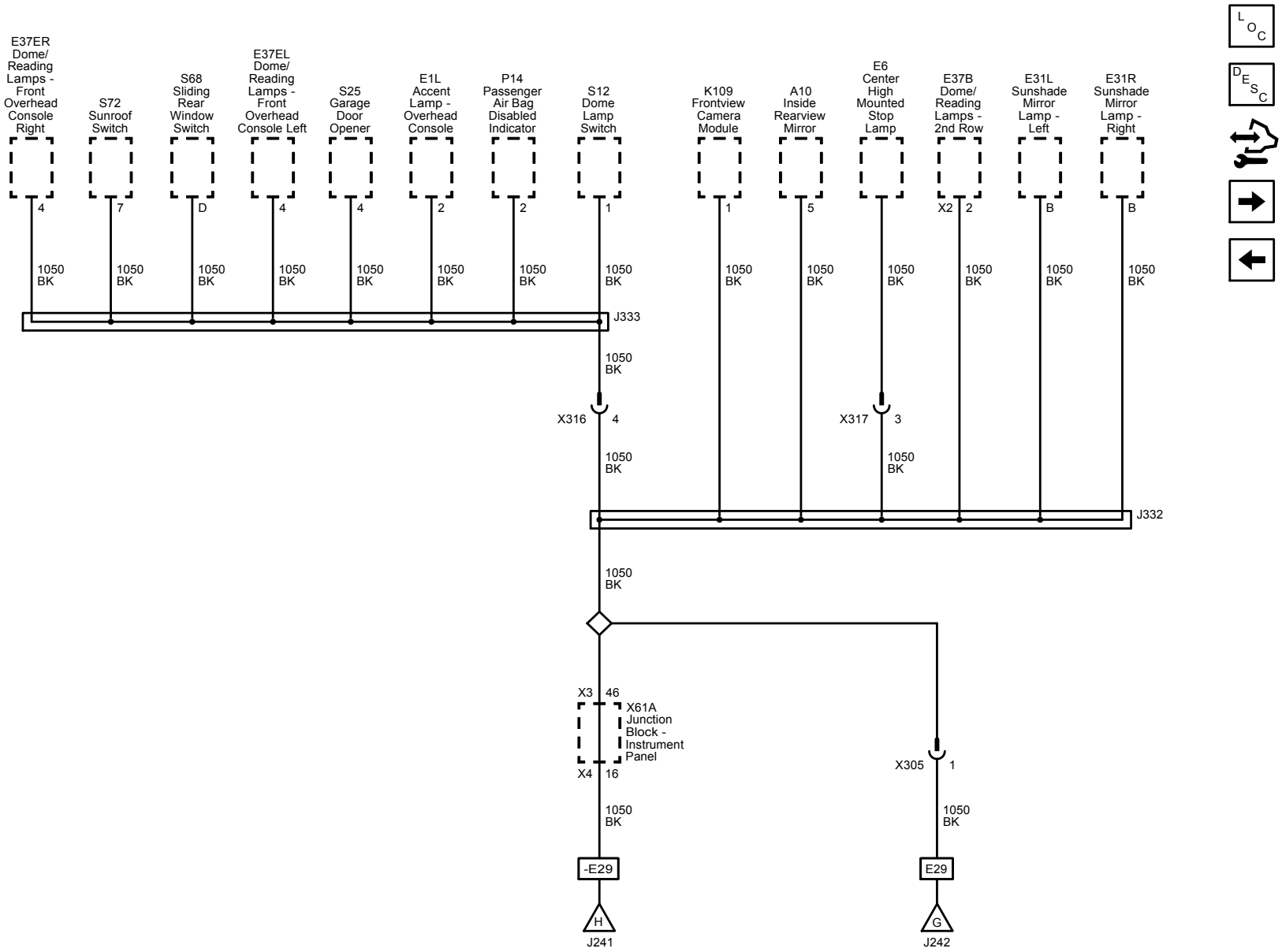
E37ER Dome/ Reading Lamps - Front Overhead Console Right
S72 Sunroof Switch
S68 Sliding Rear Window Switch
E37EL Dome/ Reading Lamps - Front Overhead Console Left
S25 Garage Door Opener
E1L Accent Lamp - Overhead Console
P14 Passenger Air Bag Disabled Indicator
S12 Dome Lamp Switch
K109 Frontview Camera Module
A10 Inside Rearview Mirror
E6 Center High Mounted Stop Lamp
E37B Dome/ Reading Lamps - 2nd Row
E31L Sunshade Mirror Lamp - Left
E31R Sunshade Mirror Lamp - Right
4
7
D
4
4
2
2
1
1
5
X2 2
B
B
1050 BK
J333
X316 4
X317 3
J332
X3 46
X61A Junction Block - Instrument Panel
X4 16
X305 1
-E29
E29
H
G
J241
J242

## G218 (except E29)

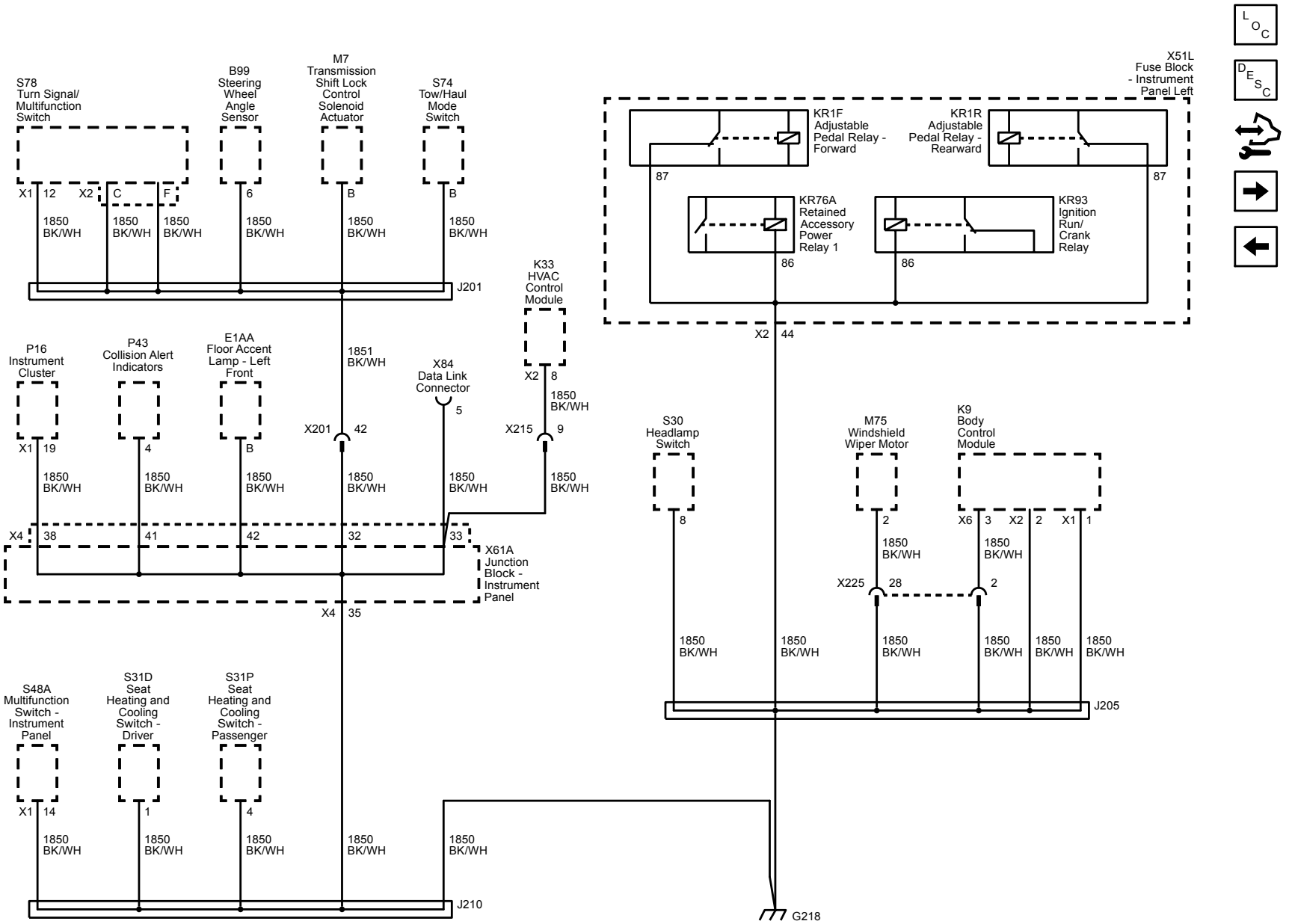

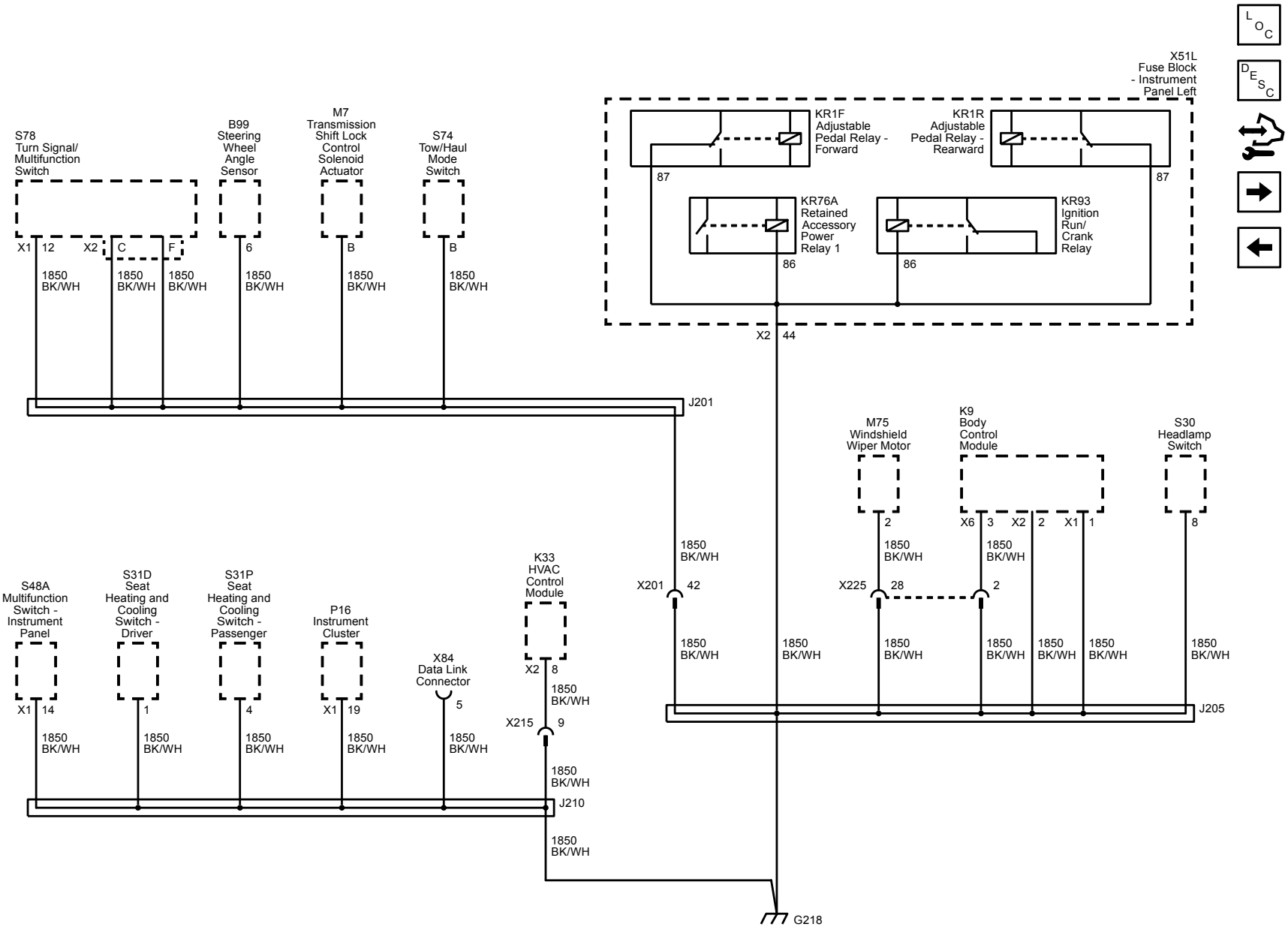
S78
Turn Signal/
Multifunction
Switch
X1 12 X2 C F
1850 BK/WH
B99
Steering
Wheel
Angle
Sensor
6
M7
Transmission
Shift Lock
Control
Solenoid
Actuator
B
S74
Tow/Haul
Mode
Switch
B
X51L
Fuse Block
- Instrument
Panel Left
KR1F
Adjustable
Pedal Relay -
Forward
KR1R
Adjustable
Pedal Relay -
Rearward
87
KR76A
Retained
Accessory
Power
Relay 1
86
KR93
Ignition
Run/
Crank
Relay
X2 44
J201
M75
Windshield
Wiper Motor
2
K9
Body
Control
Module
X6 3 X2 2 X1 1
S30
Headlamp
Switch
8
X225 28
X201 42
S48A
Multifunction
Switch -
Instrument
Panel
X1 14
S31D
Seat
Heating and
Cooling
Switch -
Driver
1
S31P
Seat
Heating and
Cooling
Switch -
Passenger
4
P16
Instrument
Cluster
X1 19
X84
Data Link
Connector
5
K33
HVAC
Control
Module
X2 8
X215 9
J210
J205
G218

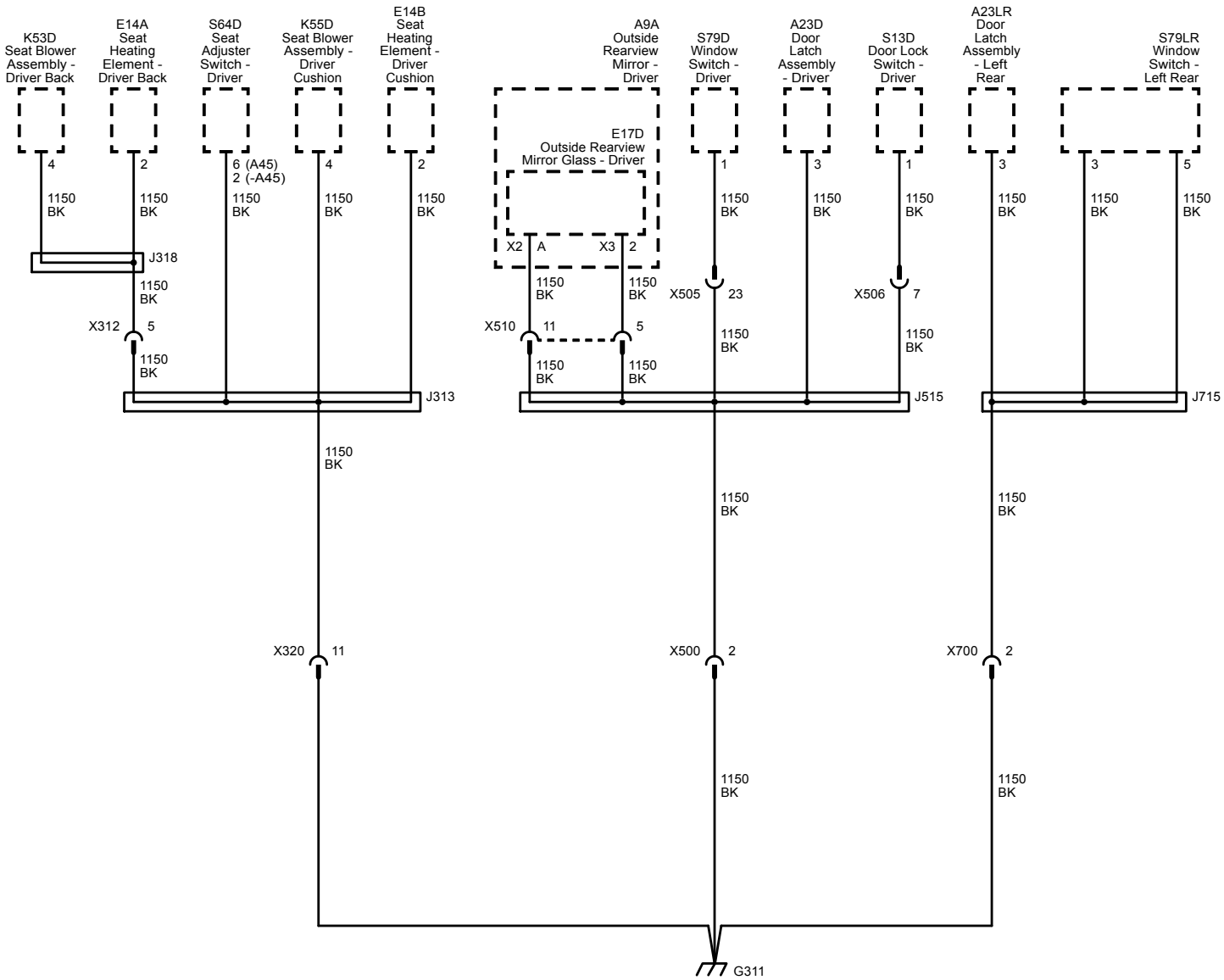
K53D
Seat Blower
Assembly -
Driver Back
E14A
Seat
Heating
Element -
Driver Back
S64D
Seat
Adjuster
Switch -
Driver
K55D
Seat Blower
Assembly -
Driver
Cushion
E14B
Seat
Heating
Element -
Driver
Cushion
A9A
Outside
Rearview
Mirror -
Driver
E17D
Outside Rearview
Mirror Glass - Driver
S79D
Window
Switch -
Driver
A23D
Door
Latch
Assembly
- Driver
S13D
Door Lock
Switch -
Driver
A23LR
Door
Latch
Assembly
- Left
Rear
S79LR
Window
Switch -
Left Rear
4
2
6 (A45)
2 (-A45)
4
2
1
3
1
3
3
5
1150
BK
J318
X312
5
J313
X2
A
X3
2
X510
11
5
X505
23
X506
7
J515
J715
X320
11
X500
2
X700
2
G311

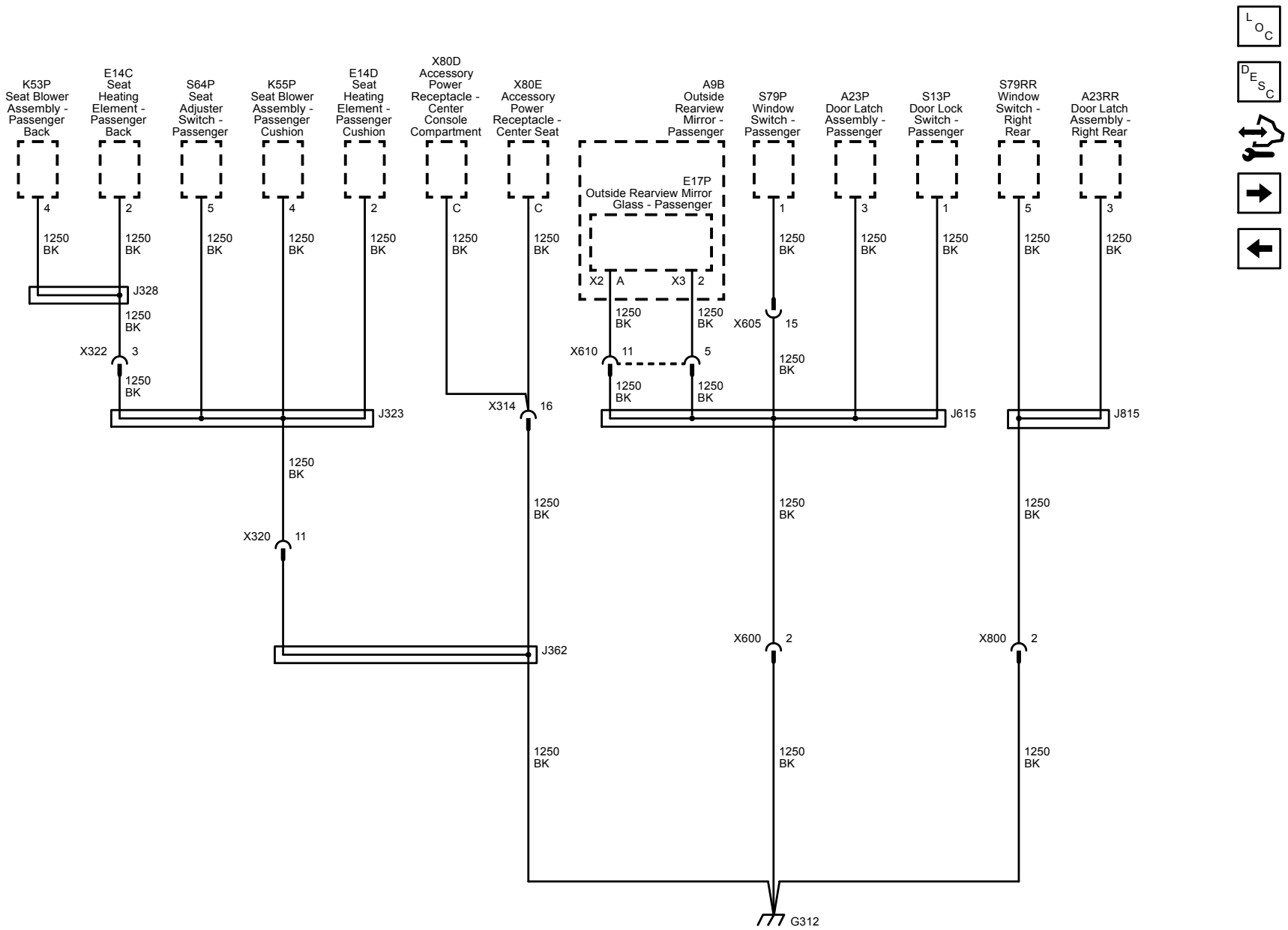
K53P Seat Blower Assembly - Passenger Back
E14C Seat Heating Element - Passenger Back
S64P Seat Adjuster Switch - Passenger
K55P Seat Blower Assembly - Passenger Cushion
E14D Seat Heating Element - Passenger Cushion
X80D Accessory Power Receptacle - Center Console Compartment
X80E Accessory Power Receptacle - Center Seat
A9B Outside Rearview Mirror - Passenger
E17P Outside Rearview Mirror Glass - Passenger
S79P Window Switch - Passenger
A23P Door Latch Assembly - Passenger
S13P Door Lock Switch - Passenger
S79RR Window Switch - Right Rear
A23RR Door Latch Assembly - Right Rear
4
2
5
4
2
C
C
X2
A
X3
2
1
3
1
5
3
1250 BK
J328
X322
3
J323
X314
16
X610
11
5
X605
15
J615
J815
X320
11
J362
X600
2
X800
2
G312

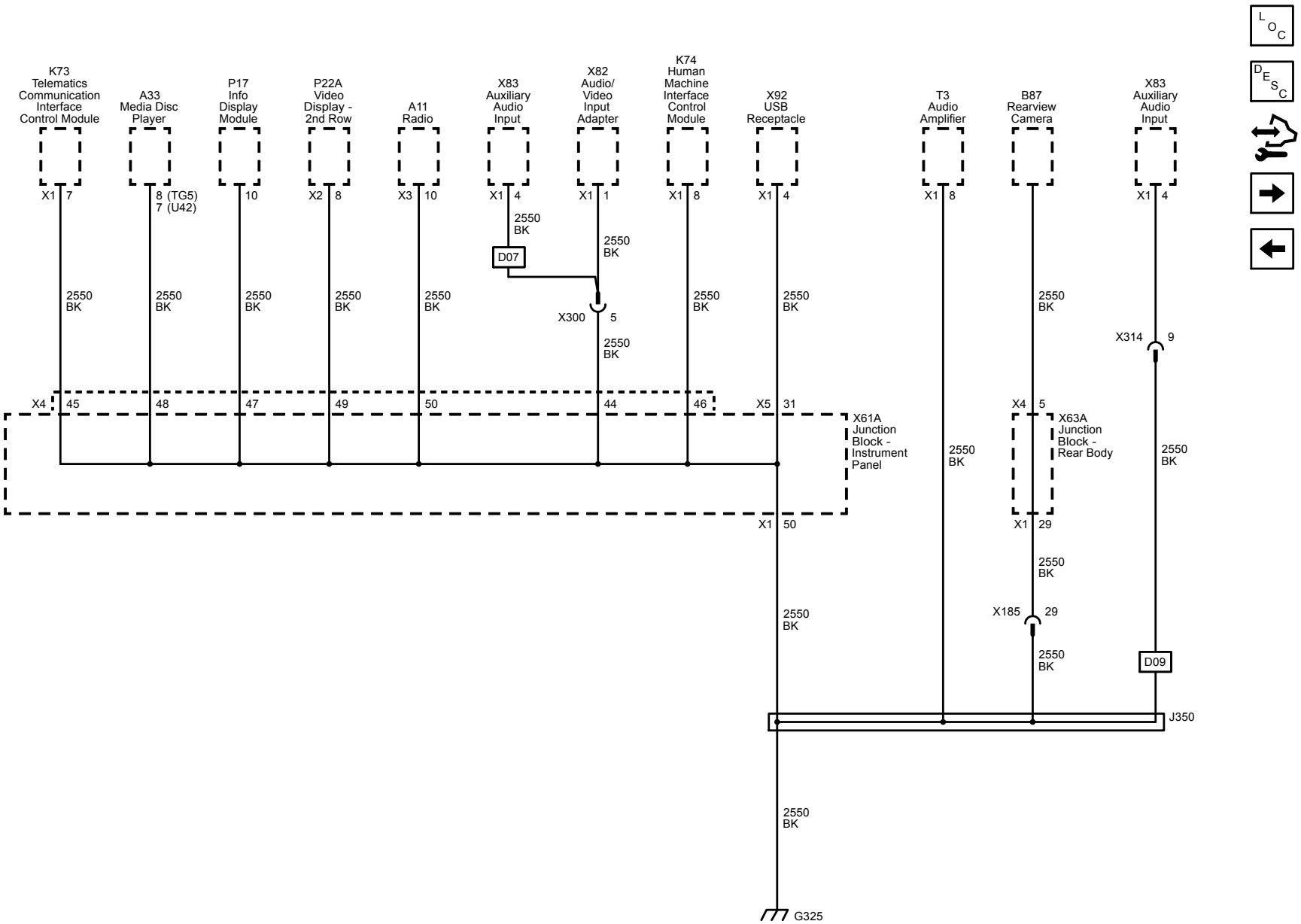
K73 Telematics Communication Interface Control Module
A33 Media Disc Player
P17 Info Display Module
P22A Video Display - 2nd Row
A11 Radio
X83 Auxiliary Audio Input
X82 Audio/ Video Input Adapter
K74 Human Machine Interface Control Module
X92 USB Receptacle
T3 Audio Amplifier
B87 Rearview Camera
X83 Auxiliary Audio Input
X1 7
8 (TG5)
7 (U42)
10
X2 8
X3 10
X1 4
X1 1
X1 8
X1 4
X1 8
X1 4
X1 4
2550 BK
D07
X300 5
X314 9
X4 45
48
47
49
50
44
46
X5 31
X61A Junction Block - Instrument Panel
X4 5
X63A Junction Block - Rear Body
X1 50
X1 29
X185 29
D09
J350
G325

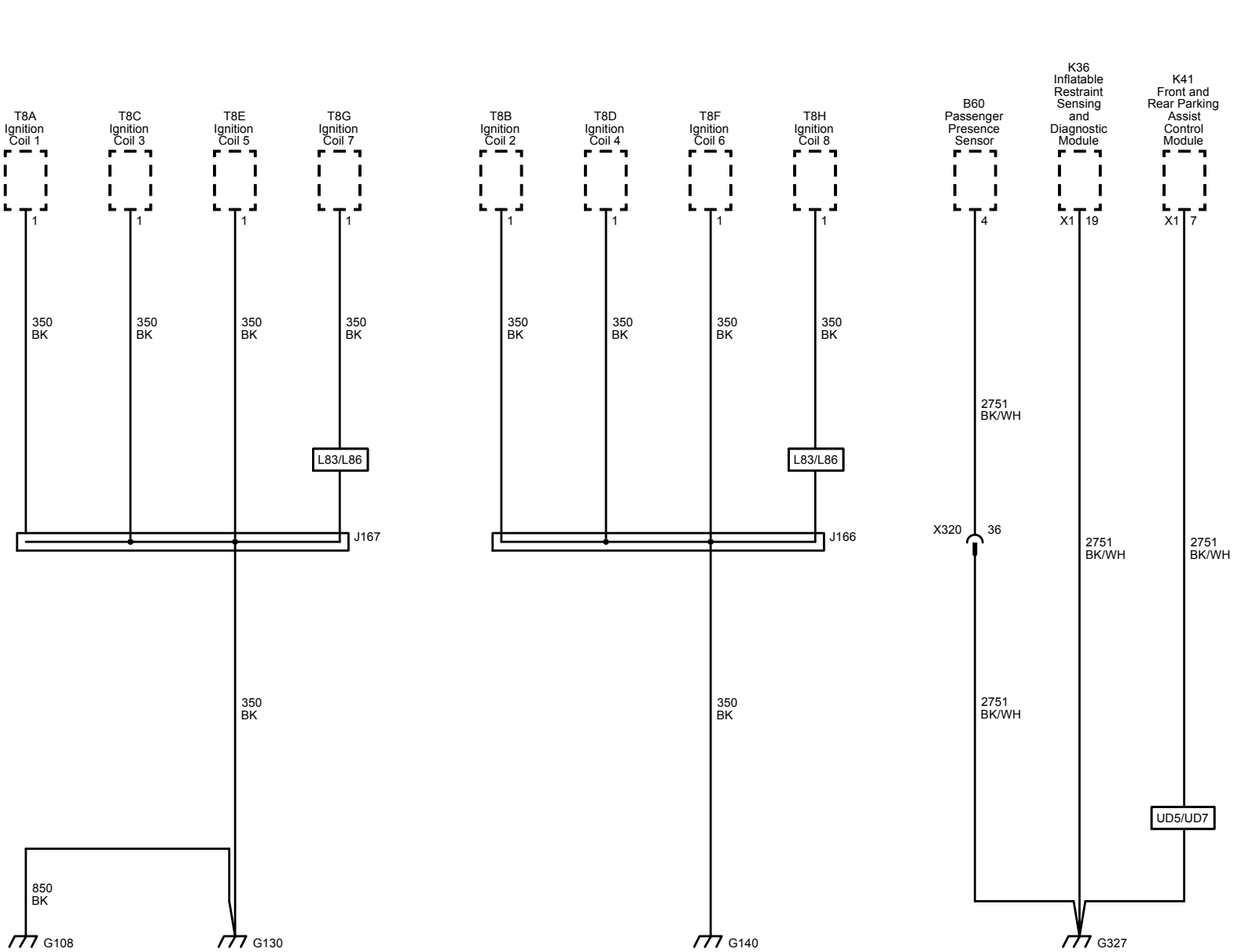
T8A Ignition Coil 1
T8C Ignition Coil 3
T8E Ignition Coil 5
T8G Ignition Coil 7
T8B Ignition Coil 2
T8D Ignition Coil 4
T8F Ignition Coil 6
T8H Ignition Coil 8
B60 Passenger Presence Sensor
K36 Inflatable Restraint Sensing and Diagnostic Module
K41 Front and Rear Parking Assist Control Module
1
4
X1
19
7
350 BK
2751 BK/WH
L83/L86
J167
J166
X320
36
850 BK
UD5/UD7
G108
G130
G140
G327
LOC
DESC

## Upfitter Provisions (except E29)

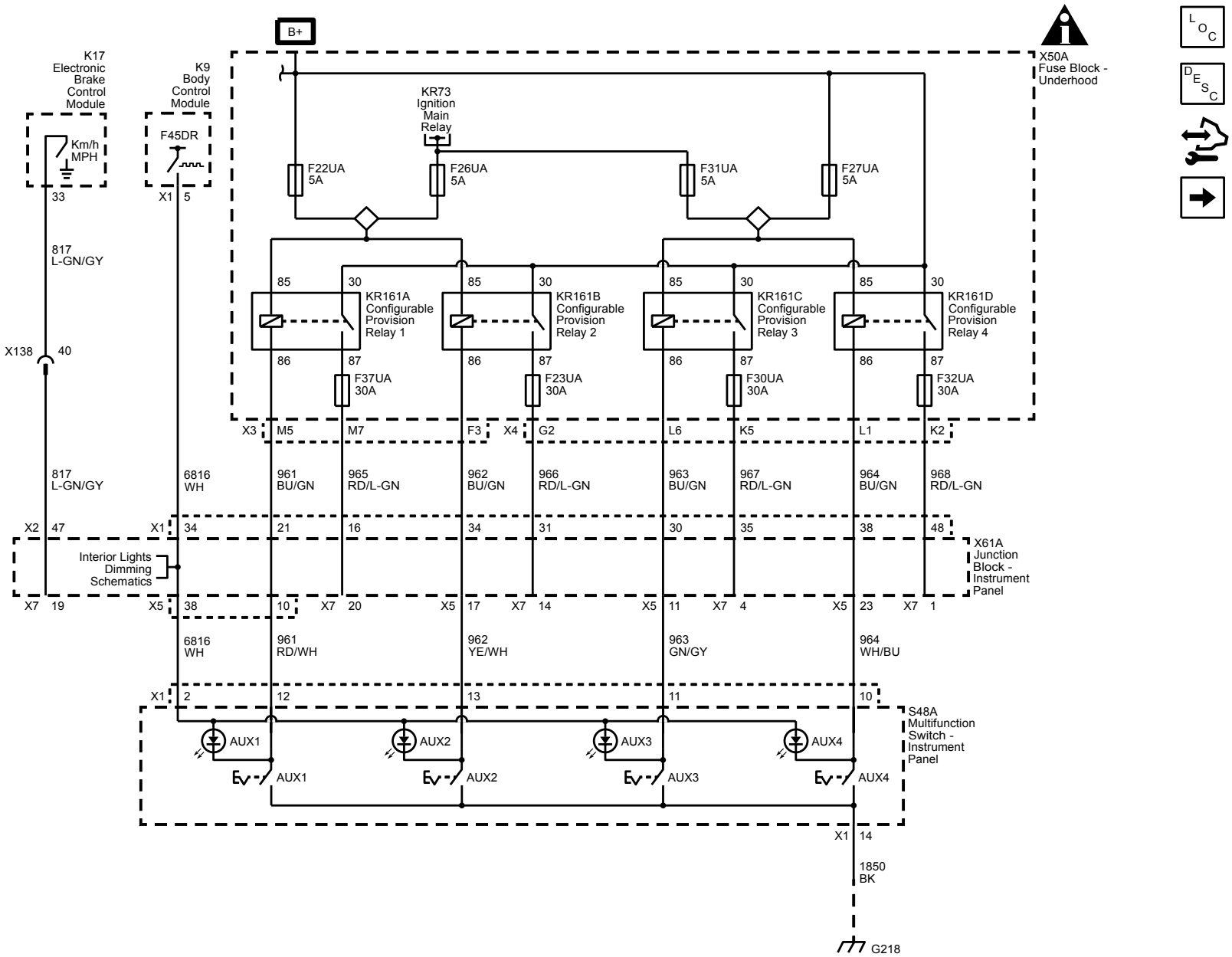

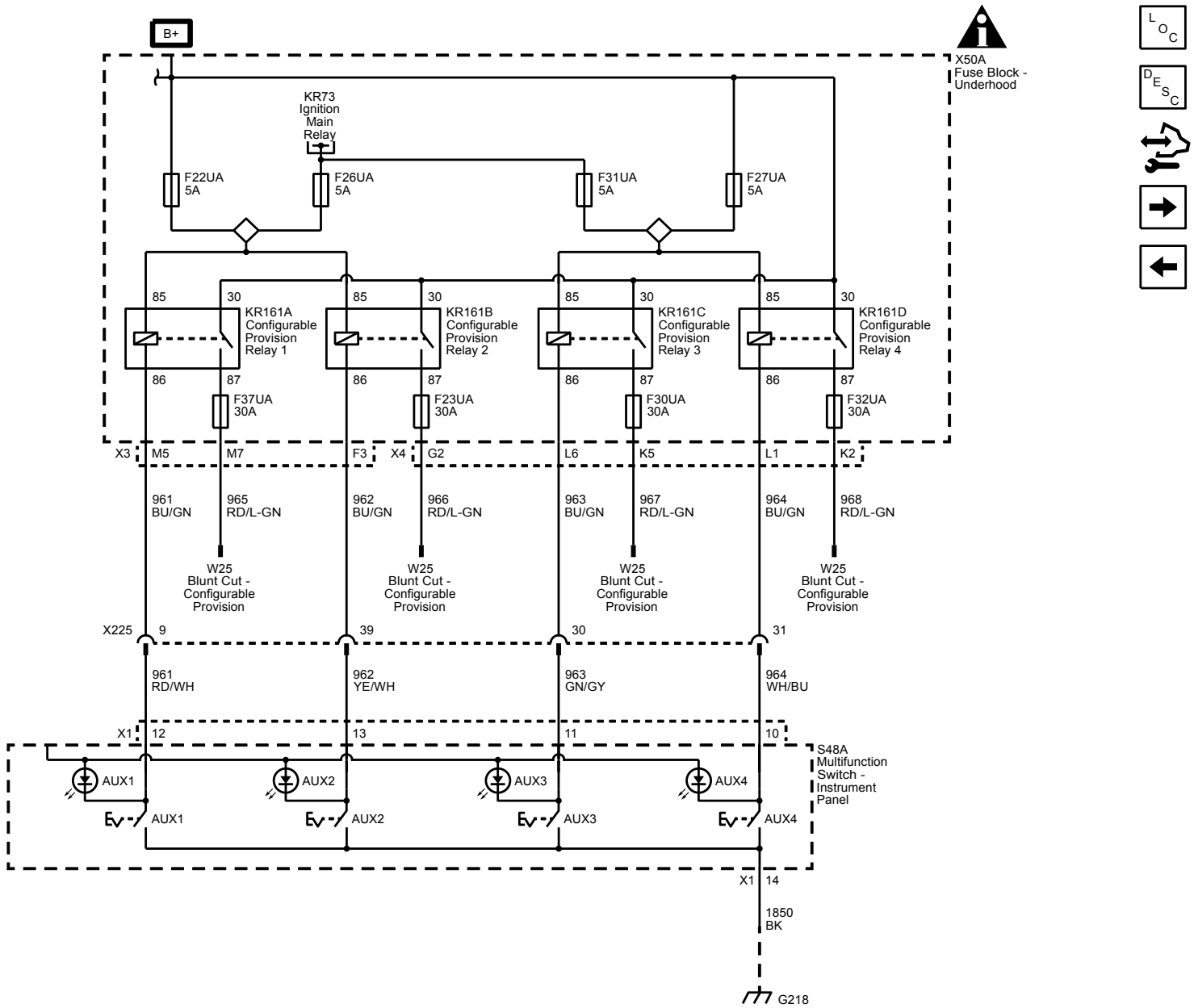
B+
X50A
Fuse Block - Underhood
KR73
Ignition Main Relay
F22UA 5A
F26UA 5A
F31UA 5A
F27UA 5A
85
30
KR161A Configurable Provision Relay 1
KR161B Configurable Provision Relay 2
KR161C Configurable Provision Relay 3
KR161D Configurable Provision Relay 4
86
87
F37UA 30A
F23UA 30A
F30UA 30A
F32UA 30A
X3
M5
M7
F3
X4
G2
L6
K5
L1
K2
961 BU/GN
965 RD/L-GN
962 BU/GN
966 RD/L-GN
963 BU/GN
967 RD/L-GN
964 BU/GN
968 RD/L-GN
W25 Blunt Cut - Configurable Provision
X225
9
39
30
31
961 RD/WH
962 YE/WH
963 GN/GY
964 WH/BU
X1
12
13
11
10
S48A Multifunction Switch - Instrument Panel
AUX1
AUX2
AUX3
AUX4
14
1850 BK
G218

# Roof Beacon Provisions (TRW)

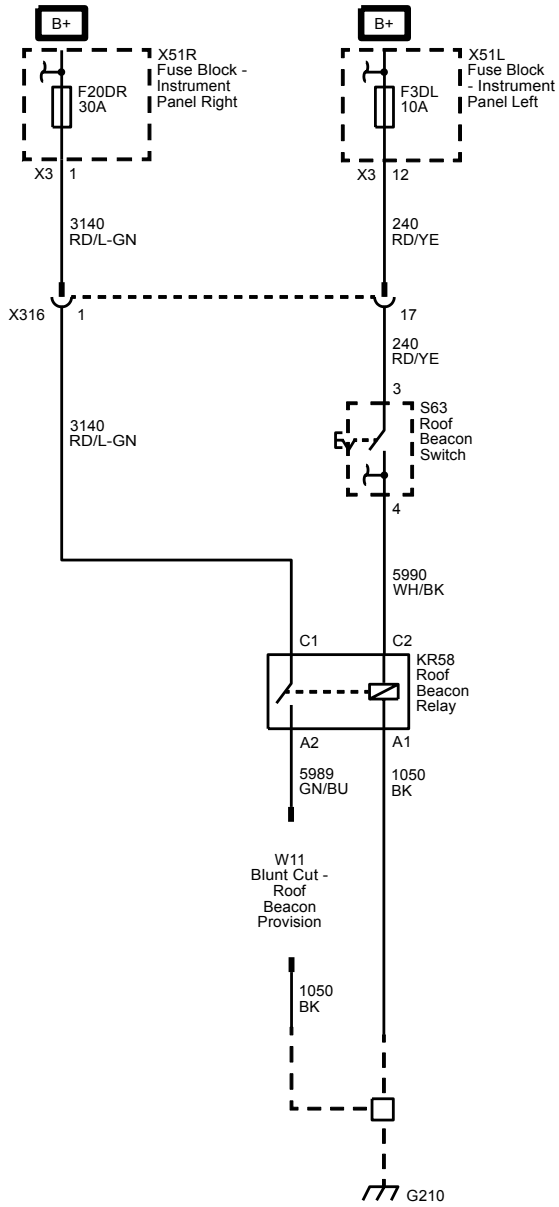

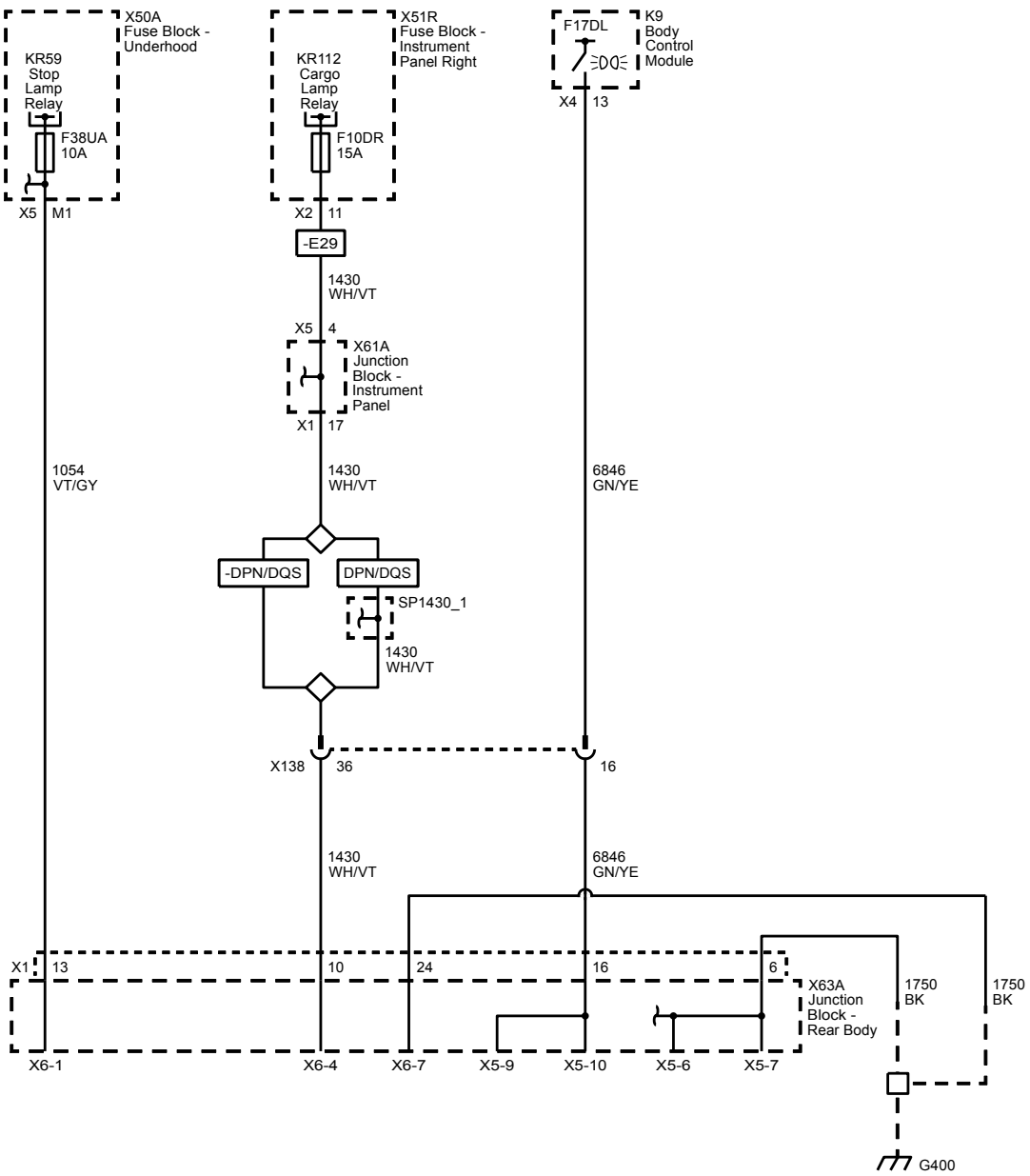
X50A
Fuse Block -
Underhood
KR59
Stop
Lamp
Relay
F38UA
10A
X5 M1
X51R
Fuse Block -
Instrument
Panel Right
KR112
Cargo
Lamp
Relay
F10DR
15A
X2 11
-E29
1430
WH/VT
X5 4
X61A
Junction
Block -
Instrument
Panel
X1 17
F17DL
K9
Body
Control
Module
X4 13
1054
VT/GY
1430
WH/VT
6846
GN/YE
-DPN/DQS
DPN/DQS
SP1430_1
1430
WH/VT
X138 36
16
1430
WH/VT
6846
GN/YE
X1 13
10
24
16
6
X63A
Junction
Block -
Rear Body
1750
BK
1750
BK
X6-1
X6-4
X6-7
X5-9
X5-10
X5-6
X5-7
G400

## Trailer Connector Pins: A, B, D, E, F, G (Z82 without 8S3 or UY2)

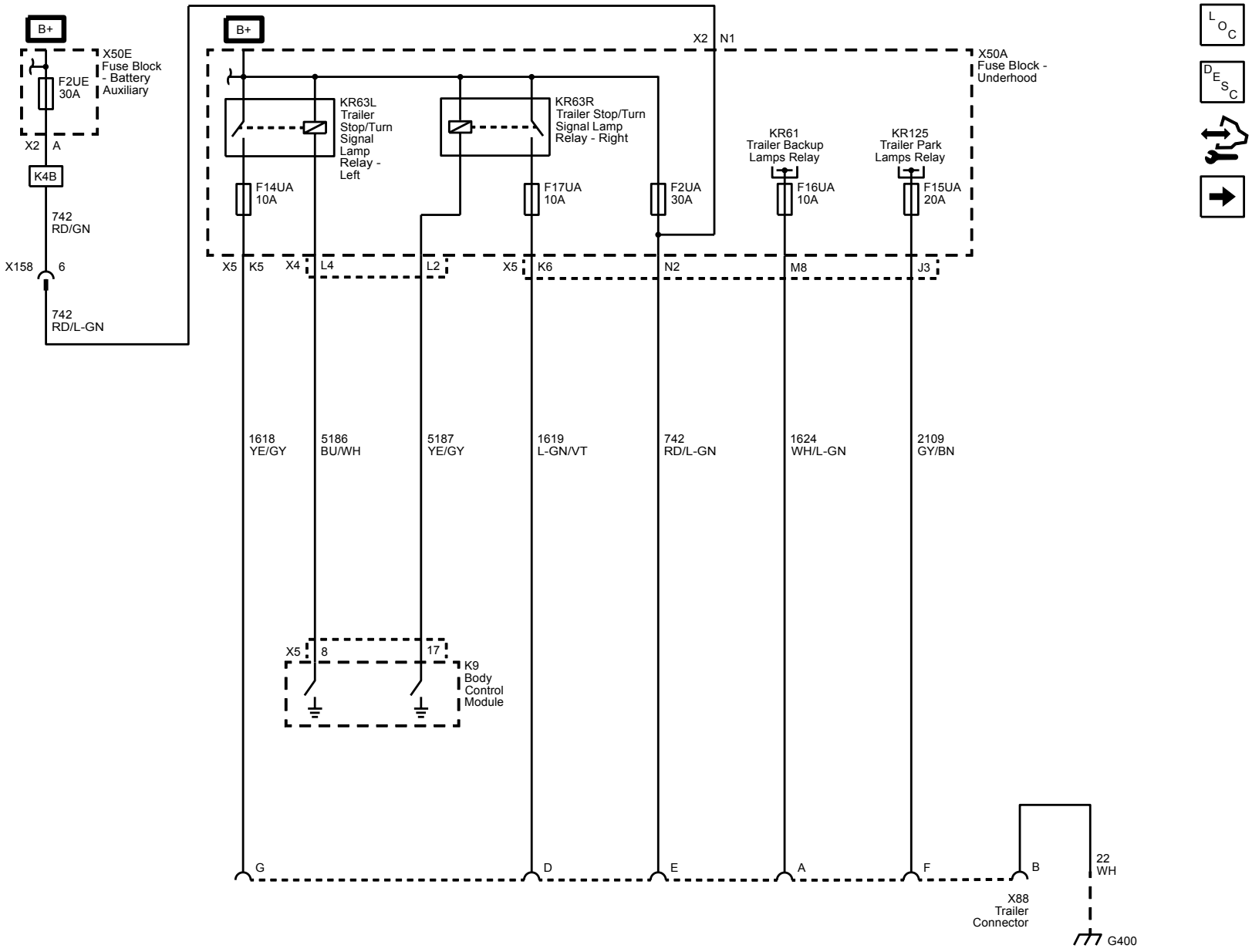

## Trailer Connector Pins: A, B, D, E, F, G (Z82 with 8S3 or UY2)

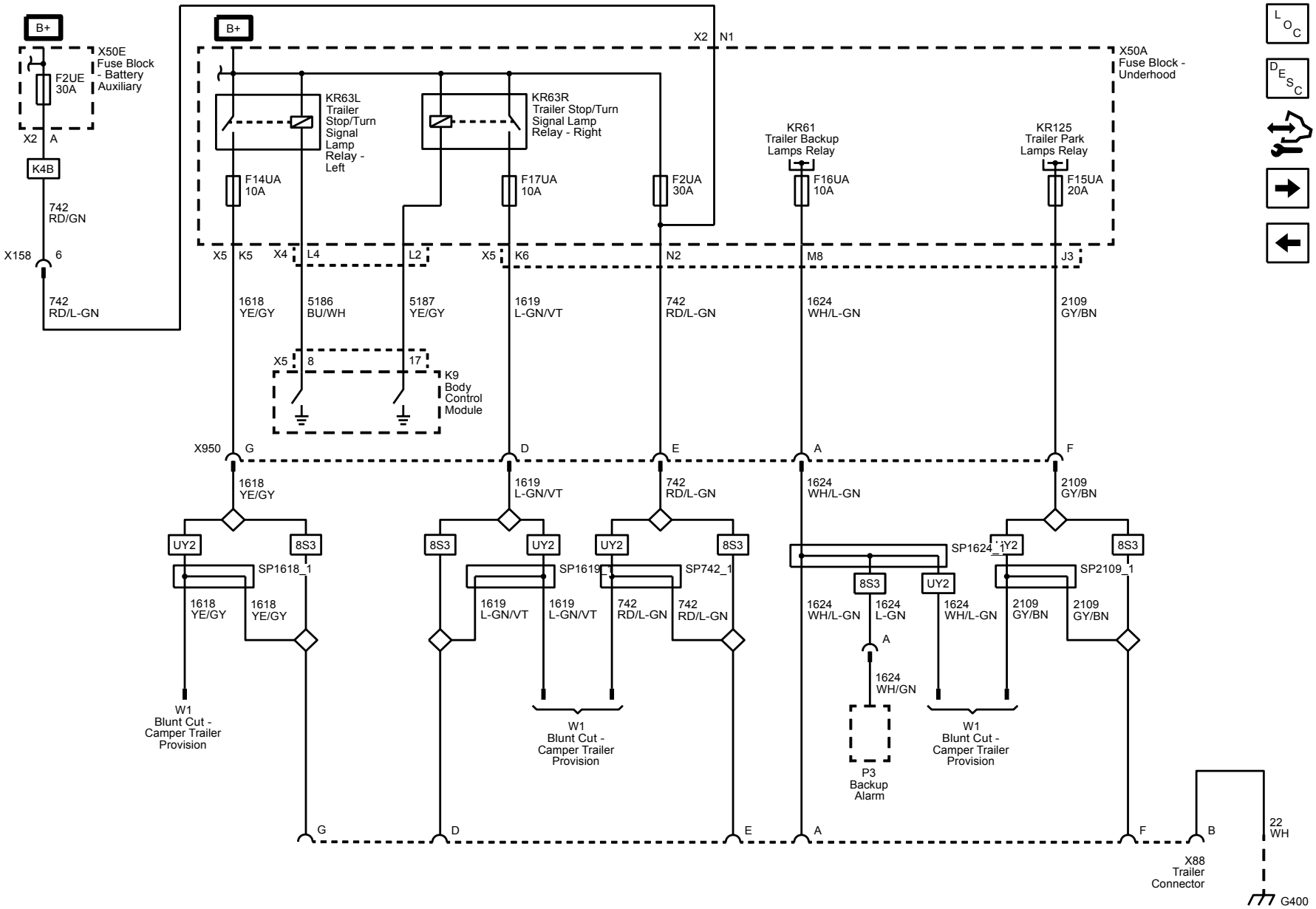

## Trailer Connector Pin: C (Z82 without 8S3, E29 or UY2)

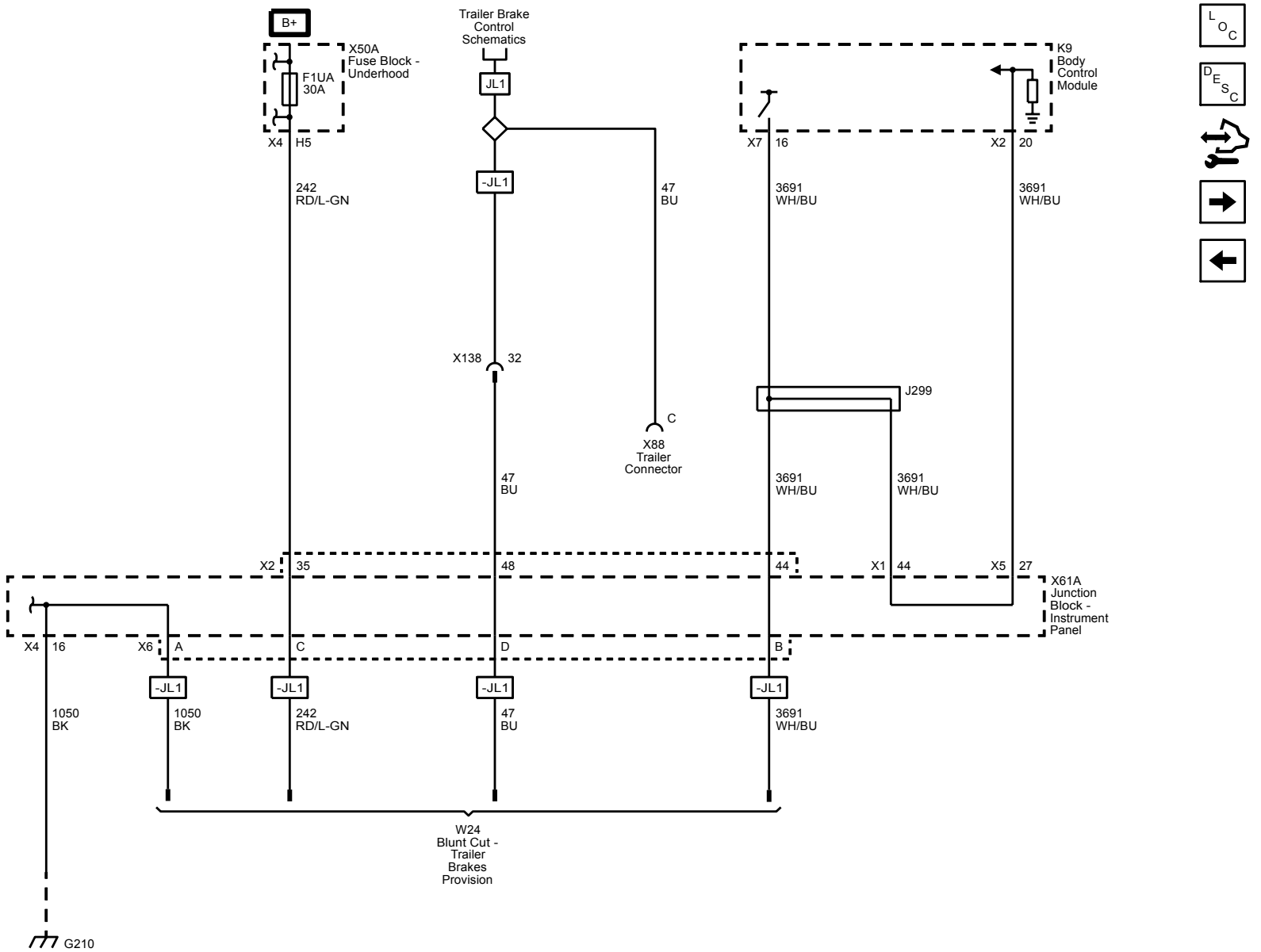

## Trailer Connector Pin: C (Z82 with 8S3 or UY2 except E29)

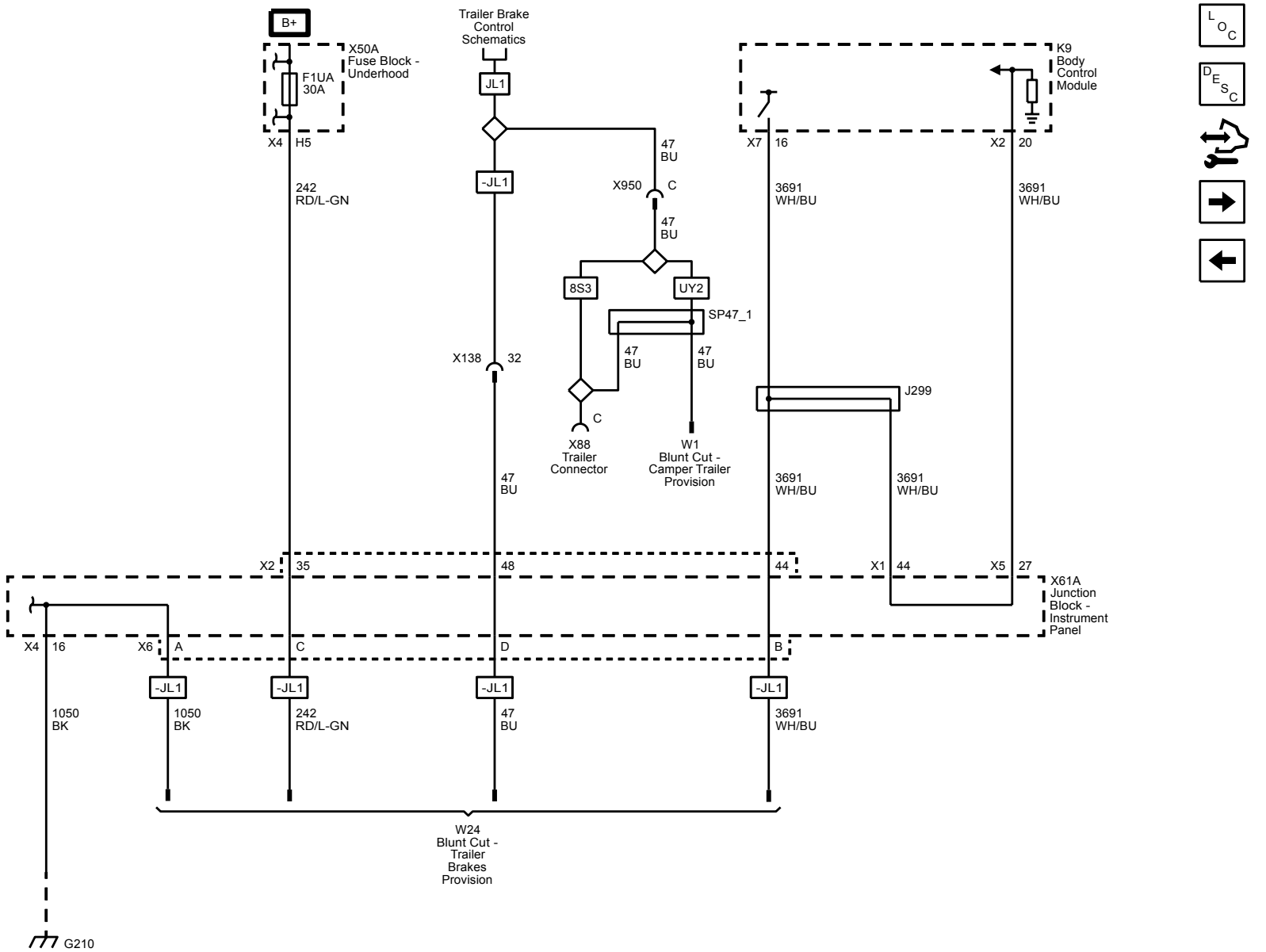

## Trailer Connector Pin: C (Z82 with E29)

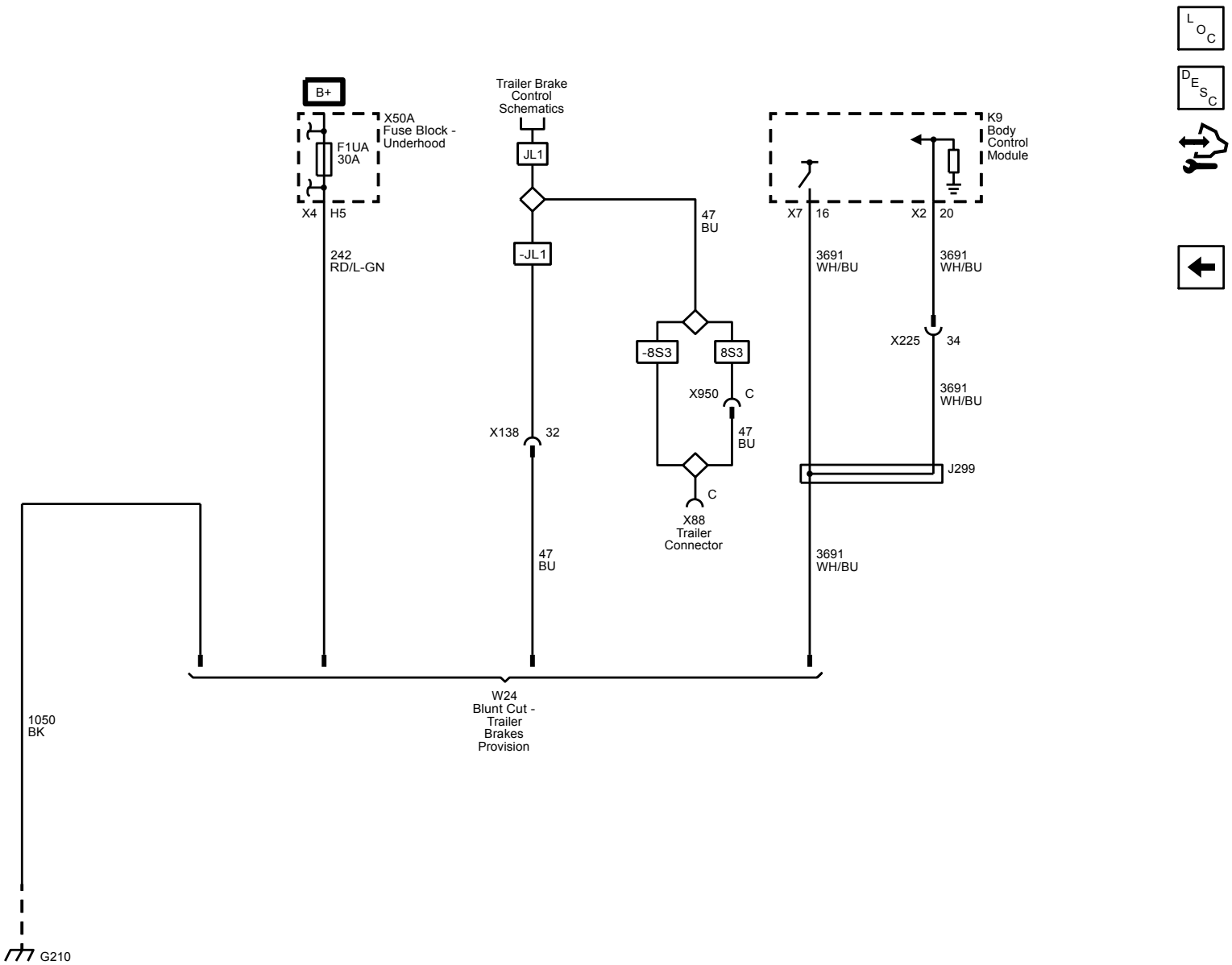

# Component Locator

## Master Electrical Component List

### *Master Electrical Component List*

| Code | Name | Option | Location | Locator View | Connector End View |
|---|---|---|---|---|---|
| A6C | Fuel Pump and Level Sensor Assembly – Primary | — | Under the vehicle, mounted in the front fuel tank | — | — |
| A6D | Fuel Pump and Level Sensor Assembly – Secondary | — | Under the vehicle, mounted in the rear fuel tank | — | — |
| A7 | Fuel Pump and Level Sensor Assembly | — | Under the vehicle, mounted in the fuel tank | — | *A7 Fuel Pump and Level Sensor Assembly* |
| A9A | Outside Rearview Mirror – Driver | — | Outside the vehicle, at the front of the driver door | — | — |
| A9B | Outside Rearview Mirror – Passenger | — | Outside the vehicle, at the front of the passenger door | — | — |
| A10 | Inside Rearview Mirror | — | In the passenger compartment, at the top center of the windshield | *Headliner Components* | — |
| A11 | Radio | — | In the passenger compartment, in the center of the Instrument Panel behind the Info Display Module | — | • *A11 Radio X2*<br>• *A11 Radio X1*<br>• *A11 Radio X3* |
| A16 | Transfer Case Motor | — | Under the vehicle, mounted to the rear of the transmission | — | *A16 Transfer Case Motor* |
| A22 | Radio Controls | — | In the passenger compartment, at the center of the Instrument Panel, part of the Info Display Module | — | — |
| A23D | Door Latch Assembly – Driver | — | Outside the vehicle, at the rear center of the driver door | *Driver Door Components* | *A23D Door Latch Assembly - Driver* |
| A23LR | Door Latch Assembly – Left Rear | — | Outside the vehicle, at the rear center of the left rear door | — | *A23LR Door Latch Assembly - Left Rear* |
| A23P | Door Latch Assembly – Passenger | — | Outside the vehicle, at the rear center of the passenger door | *Passenger Door Components* | — |
| A23RR | Door Latch Assembly – Right Rear | — | Outside the vehicle, at the rear center of the right rear door | — | *A23RR Door Latch Assembly - Right Rear* |
| A24D | Door Handle Assembly – Driver Exterior | — | Outside the vehicle, at the rear of the driver door | — | — |
| A33 | Media Disc Player | — | In the passenger compartment, behind the instrument panel lower glove box | *Rear of Instrument Panel Components* | *A33 Media Disc Player* |
| A39 | Reductant Fluid Reservoir Assembly | — | Under the vehicle, mounted to the inboard side of the frame | — | — |
| B1 | A/C Refrigerant Pressure Sensor | — | In the engine compartment, near the left front corner of the engine | • *Left Side of Engine Components (LML)*<br>• *Right Side of Engine Components (L96)* | *B1 A/C Refrigerant Pressure Sensor* |

| | | | | | |
|---|---|---|---|---|---|
| B5LF | Wheel Speed Sensor – Left Front | — | Outside the vehicle, part of the left front wheel hub assembly | — | *B5LF Wheel Speed Sensor - Left Front* |
| B5LR | Wheel Speed Sensor – Left Rear | — | Outside the vehicle, mounted to the outboard end of the left axle tube | • *Chassis Components*<br>• *Front Axle Components* | *B5LR Wheel Speed Sensor - Left Rear* |
| B5RF | Wheel Speed Sensor – Right Front | — | Outside the vehicle, part of the right front wheel hub assembly | — | *B5RF Wheel Speed Sensor - Right Front* |
| B5RR | Wheel Speed Sensor – Right Rear | — | Outside the vehicle, mounted to the outboard end of the right axle tube | • *Front Axle Components*<br>• *Chassis Components* | *B5RR Wheel Speed Sensor - Right Rear* |
| B7D | Air Temperature Sensor – Duct Left Lower | CJ2 | In the passenger compartment, behind the instrument panel, on the left side of the HVAC module | — | — |
| B7E | Air Temperature Sensor – Duct Right Lower | CJ2 | In the passenger compartment, behind the instrument panel, on the right side of the HVAC module | — | — |
| B7H | Air Temperature Sensor – Duct Left Upper | CJ2 | In the passenger compartment, behind the instrument panel, on the upper left side of the HVAC module | — | — |
| B7J | Air Temperature Sensor – Duct Right Upper | CJ2 | In the passenger compartment, behind the instrument panel, on the upper right side of the HVAC module | — | — |
| B9 | Ambient Air Temperature Sensor | — | Outside the vehicle, behind the right side of the grill | • *Front of Vehicle (Chevrolet) Components*<br>• *Front of Vehicle (GMC) Components* | *B9 Ambient Air Temperature Sensor* |
| B10B | Ambient Light/Sunload Sensor | — | In the passenger compartment, at the top middle of the instrument panel | — | *B10B Ambient Light/Sunload Sensor* |
| B14A | Transmission Output Shaft Speed Sensor | — | Under the vehicle, mounted in the transmission tailshaft housing | — | *B14A Transmission Output Shaft Speed Sensor* |
| B15 | Transmission Internal Mode Switch | — | Under the vehicle, inside the transmission assembly | — | — |
| B16 | Backup Lamp Switch | — | Under the vehicle, mounted to the transmission assembly | — | *B16 Backup Lamp Switch* |
| B18 | Battery Current Sensor | — | In the engine compartment, near the battery, on the negative battery cable | — | — |
| B19B | Brake Booster Vacuum Sensor | — | In the engine compartment, mounted to the brake booster | *Left Side of Engine Compartment Components* | — |
| B20 | Brake Fluid Level Switch | — | In the engine compartment, mounted in the brake fluid reservoir | — | *B20 Brake Fluid Level Switch* |
| B22 | Brake Pedal Position Sensor | — | In the passenger compartment, in the driver side footwell, under the instrument panel | — | *B22 Brake Pedal Position Sensor* |
| B23 | Camshaft Position Sensor | — | In the engine compartment, at the front of the engine, mounted the the timing chain cover | — | • *B23 Camshaft Position Sensor (LML)*<br>• *B23 Camshaft Position Sensor (L96)* |

| | | | | | |
|---|---|---|---|---|---|
| B24 | Cellular Phone Microphone | — | In the passenger compartment, in the left side of the overhead console | *Headliner Components* | — |
| B25 | Clutch Pedal Position Switch | — | In the passenger compartment, in the driver side footwell, under the instrument panel | — | — |
| B26 | Crankshaft Position Sensor | — | In the engine compartment, mounted in the side of the engine block | *Right Side of Engine Components (L96)* | • *B26 Crankshaft Position Sensor (L96)*<br>• *B26 Crankshaft Position Sensor (LML)* |
| B27P | Door Handle Switch – Passenger Exterior | — | Outside the vehicle, at the rear of the passenger door | — | — |
| B34 | Engine Coolant Temperature Sensor | — | In the engine compartment, top of the engine, left of the air intake, in the water outlet housing | *Left Side of Engine Components (L96)* | *B34 Engine Coolant Temperature Sensor (L96)* |
| B35 | Engine Oil Level Switch | — | In the engine compartment, bottom left of the engine oil pan | — | *B35 Engine Oil Level Switch (LML)* |
| B37B | Engine Oil Pressure Sensor | — | In the engine compartment, at the top rear of the engine block, between the cylinder heads | *Left Side of Engine Components (L96)* | • *B37B Engine Oil Pressure Sensor (LML)*<br>• *B37B Engine Oil Pressure Sensor (L96)* |
| B39 | A/C Evaporator Temperature Sensor | — | In the passenger compartment, behind the instrument panel, mounted in the HVAC housing | — | — |
| B46 | Fuel Level Sensor | — | Under the vehicle, inside the fuel tank, part of the fuel pump and level sensor assembly | — | — |
| B47B | Fuel Rail Pressure Sensor | — | In the engine compartment, at the top of the engine, mounted to the fuel rail | — | *B47B Fuel Rail Pressure Sensor (LML)* |
| B48A | Fuel Temperature Sensor 1 | — | In the engine compartment, top of the engine, mounted to the left side of the fuel injection pump | — | *B48A Fuel Temperature Sensor 1 (LML)* |
| B52C | Heated Oxygen Sensor – Bank 1 Sensor 1 | — | Under the vehicle, mounted in the bank 1 exhaust, upstream of the catalytic converter | *Exhaust Components (L96)* | *B52C Heated Oxygen Sensor - Bank 1 Sensor 1* |
| B52D | Heated Oxygen Sensor – Bank 1 Sensor 2 | — | Under the vehicle, mounted in the bank 1 exhaust, downstream of the catalytic converter | — | *B52D Heated Oxygen Sensor - Bank 1 Sensor 2* |
| B52E | Heated Oxygen Sensor – Bank 2 Sensor 1 | — | Under the vehicle, mounted in the bank 2 exhaust, upstream of the catalytic converter | *Exhaust Components (L96)* | *B52E Heated Oxygen Sensor - Bank 2 Sensor 1* |
| B52F | Heated Oxygen Sensor – Bank 2 Sensor 2 | — | Under the vehicle, mounted in the bank 2 exhaust, downstream of the catalytic converter | — | *B52F Heated Oxygen Sensor - Bank 2 Sensor 2* |
| B55 | Hood Ajar Switch | — | Outside the vehicle, at the front center of the hood, part of the hood latch assembly | *Right Side of Engine Compartment Components* | *B55 Hood Ajar Switch* |
| B59L | Front Impact Sensor – Left | — | In the engine compartment, at the left side of the top of the radiator core support | — | — |
| B59R | Front Impact Sensor – Right | — | In the engine compartment, at the right side of the top of the radiator core support | — | — |
| B60 | Passenger Presence Sensor | — | In the passenger compartment, under the passenger seat cushion | — | *B60 Passenger Presence Sensor* |

| | | | | | |
|---|---|---|---|---|---|
| B61P | Seat Belt Tension Sensor – Passenger | — | In the passenger compartment, at the base of the B-pillar, part of the passenger seat belt retractor | — | — |
| B62D | Seat Position Sensor – Driver | — | In the passenger compartment, mounted to the outboard track of the driver seat | — | — |
| B62P | Seat Position Sensor – Passenger | — | In the passenger compartment, mounted to the outboard track of the passenger seat | — | — |
| B63LF | Side Impact Sensor – Left Front | — | At the left front of the passenger compartment, mounted inside the left front door, at the bottom | *Driver Door Components* | *B63LF Side Impact Sensor - Left Front* |
| B63LR | Side Impact Sensor – Left Rear | — | At the left rear of the passenger compartment, mounted inside the left rear door, at the bottom | — | *B63LR Side Impact Sensor - Left Rear* |
| B63RF | Side Impact Sensor – Right Front | — | At the right front of the passenger compartment, mounted inside the right front door, at the bottom | *Passenger Door Components* | — |
| B63RR | Side Impact Sensor – Right Rear | — | At the right rear of the passenger compartment, mounted inside the right rear door, at the bottom | — | *B63RR Side Impact Sensor - Right Rear* |
| B68A | Knock Sensor 1 | — | In the engine compartment, on the rear of the engine, below the cylinder head | — | *B68A Knock Sensor 1* |
| B68B | Knock Sensor 2 | — | In the engine compartment, on the rear of the engine, below the cylinder head | *Right Side of Engine Components (L96)* | *B68B Knock Sensor 2* |
| B74 | Manifold Absolute Pressure Sensor | — | In the engine compartment, mounted to the intake manifold | — | • *B74 Manifold Absolute Pressure Sensor (LML)*<br>• *B74 Manifold Absolute Pressure Sensor (L96)* |
| B75B | Mass Air Flow/Intake Air Temperature Sensor | — | In the engine compartment, in air intake tube, near the air filter housing | • *Left Side of Engine Components (LML)*<br>• *Left Side of Engine Components (L96)* | *B75B Mass Air Flow/Intake Air Temperature Sensor* |
| B75C | Multifunction Intake Air Sensor | — | In the engine compartment, in air intake tube, near the air filter housing | — | *B75C Multifunction Intake Air Sensor* |
| B77LF | Radio Volume Compensator Interior Noise Microphone – Left Front | NKC | In the passenger compartment, at the left front of the headliner | *Headliner Components* | — |
| B77R | Radio Volume Compensator Interior Noise Microphone – Rear | NKC | In the passenger compartment, at the rear center of the headliner | — | — |
| B77RF | Radio Volume Compensator Interior Noise Microphone – Right Front | NKC | In the passenger compartment, at the right front of the headliner | *Headliner Components* | — |
| B78A | Front Object Sensor – Left Outer | UD5 | Outside the vehicle, mounted to the left side of the front bumper | — | *B78A Front Object Sensor - Left Outer* |
| B78B | Front Object Sensor – Right Outer | UD5 | Outside the vehicle, mounted to the right side of the front bumper | *Front of Vehicle (Chevrolet) Components* | *B78B Front Object Sensor - Right Outer* |
| B78C | Front Object Sensor – Left Middle | UD5 | Outside the vehicle, mounted to the left middle of the front bumper | — | *B78C Front Object Sensor - Left Middle* |

| | | | | | |
|---|---|---|---|---|---|
| B78D | Front Object Sensor – Right Middle | UD5 | Outside the vehicle, mounted to the right middle of the front bumper | • *Front of Vehicle (Chevrolet) Components*<br>• *Front of Vehicle (GMC) Components* | *B78D Front Object Sensor - Right Middle* |
| B78E | Rear Object Sensor – Left Middle | UD7 | Outside the vehicle, mounted to the left middle of the rear bumper | — | *B78E Rear Object Sensor - Left Middle* |
| B78F | Rear Object Sensor – Right Middle | UD7 | Outside the vehicle, mounted to the right middle of the rear bumper | *Rear of Vehicle Components* | *B78F Rear Object Sensor - Right Middle* |
| B78G | Rear Object Sensor – Left Outer | UD7 | Outside the vehicle, mounted to the left side of the rear bumper | — | *B78G Rear Object Sensor - Left Outer* |
| B78H | Rear Object Sensor – Right Outer | UD7 | Outside the vehicle, mounted to the right side of the rear bumper | *Rear of Vehicle Components* | *B78H Rear Object Sensor - Right Outer* |
| B80 | Park Brake Switch | — | In the passenger compartment, at the left side of the Driver Footwell | — | *B80 Park Brake Switch* |
| B81B | Park Position Switch | — | In the passenger compartment, on the steering column near the base of the shifter | — | — |
| B87 | Rearview Camera | — | Outside the vehicle, at the top middle of the tailgate, mounted in the tailgate handle | — | — |
| B88D | Seat Belt Switch – Driver | — | In the passenger compartment, at the inboard side of the driver seat, part of the seat belt buckle | — | — |
| B88P | Seat Belt Switch – Passenger | — | In the passenger compartment, at the inboard side of the passenger seat, part of the seat belt buckle | — | — |
| B99 | Steering Wheel Angle Sensor | — | In the passenger compartment, at the top of the steering column, behind the steering wheel | — | — |
| B107 | Accelerator Pedal Position Sensor | — | In the passenger compartment, in the driver side footwell, under the intstrument panel | — | *B107 Accelerator Pedal Position Sensor* |
| B112 | Turbocharger Vane Position Sensor | — | In the engine compartment, on the top rear center of the engine | — | *B112 Turbocharger Vane Position Sensor (LML)* |
| B116 | Water in Fuel Sensor | — | In the engine compartment, at the right rear of the engine, mounted in the bottom of the fuel filter | *Underbody Components (LML)* | *B116 Water in Fuel Sensor (LML)* |
| B118B | Windshield Washer Fluid Level Switch | — | Outside the vehicle, at the left front corner of the vehicle, below the headlight assembly, in the washer fluid reservoir | — | *B118B Windshield Washer Fluid Level Switch* |
| B130A | Exhaust Gas Recirculation Temperature Sensor 1 | LML | In the engine compartment, on the top right rear of the engine | — | *B130A Exhaust Gas Recirculation Temperature Sensor 1 (LML)* |
| B130B | Exhaust Gas Recirculation Temperature Sensor 2 | LML | In the engine compartment, on the top left middle of the engine | — | *B130B Exhaust Gas Recirculation Temperature Sensor 2 (LML)* |
| B131A | Exhaust Temperature Sensor 1 | LML | In the engine compartment, on the right rear of the engine, mounted on top of the exhaust pipe | — | *B131A Exhaust Temperature Sensor 1 (LML)* |
| B131B | Exhaust Temperature Sensor 2 | LML | Under the vehicle, on left side, behind the catalytic converter | — | — |
| B131C | Exhaust Temperature Sensor 3 | LML | Under the vehicle, attached to the exhaust pipe, at the middle of the diesel particulate filter | *Chassis Components* | *B131C Exhaust Temperature Sensor 3 (LML)* |

| | | | | | |
|---|---|---|---|---|---|
| B131E | Exhaust Temperature Sensor 5 | LML | Under the vehicle, attached to the exhaust pipe, near the rear of the diesel particulate filter | — | *B131E Exhaust Temperature Sensor 5 (LML)* |
| B150 | Fuel Tank Pressure Sensor | — | Under the vehicle, at the top of the fuel tank | *Chassis Components* | *B150 Fuel Tank Pressure Sensor* |
| B153D | Seat Belt Buckle – Driver | — | In the passenger compartment, at the inboard side of the drive seat | — | — |
| B153P | Seat Belt Buckle – Passenger | — | In the passenger compartment, at the inboard side of the passenger seat | — | — |
| B154 | Diesel Particulate Filter Exhaust Differential Pressure Sensor | LML | Under the vehicle, mounted to the frame, near the diesel particulate filter | *Chassis Components* | *B154 Diesel Particulate Filter Exhaust Differential Pressure Sensor (LML)* |
| B192 | Throttle Inlet Absolute Pressure Sensor | — | Right front of the engine compartment, on the throttle body | — | *B192 Throttle Inlet Absolute Pressure Sensor* |
| B193A | Charge Air Cooler Inlet Temperature Sensor | LML | In the engine compartment, mounted in the air inlet tube, near the air cleaner | — | *B193A Charge Air Cooler Inlet Temperature Sensor (LML)* |
| B193B | Charge Air Cooler Outlet Temperature Sensor | LML | In the engine compartment, mounted in the air inlet tube, near the throttle body | — | — |
| B194 | Reductant Pressure Sensor | LML | Under the vehicle, mounted in the reductant fluid reservoir assembly | — | — |
| B195A | Nitrogen Oxides Sensor 1 | LML | In the engine compartment, attached to the exhaust pipe, on the top left rear side of the engine | *Chassis Components* | *B195A Nitrogen Oxides Sensor 1 (LML)* |
| B195B | Nitrogen Oxides Sensor 2 | LML | Under the vehicle, attached to the exhaust pipe, at the middle of the diesel particulate filter | — | — |
| B198 | Fuel Composition Sensor | — | Undet the vehicle, mounted to the left side of the frame | — | — |
| B212 | Reductant Sensor Module | LML | Under the vehicle, above the reductant tank | — | — |
| B215 | Fuel Filter Pressure Switch | LML | In the engine compartment, on the middle right side of the engine | — | *B215 Fuel Filter Pressure Switch (LML)* |
| B227 | Gear Position Sensor | — | Under the vehicle, mounted to the transfer case | — | — |
| B229 | Alternative Fuel Rail Pressure/Temperature Sensor | LC8 | In the engine compartment, on top of the engine, mounted to the left bank alternative fuel rail, facing towards the front of the vehicle. | — | — |
| C1B | Battery – Auxiliary | — | In the engine compartment, at the left front corner, forward of the underhood fuse block | — | — |
| C1 | Battery | — | In the engine compartment, at the right rear corner | *Right Side of Engine Compartment Components* | — |
| E1AA | Floor Accent Lamp – Left Front | — | In the passenger compartment, at the to of the left front footwell | — | — |
| E1AB | Floor Accent Lamp – Right Front | — | In the passenger compartment, at the top of the right front footwell | — | — |
| E1C | Accent Lamp – Driver Door Handle | — | In the passenger compartment, in the left front door handle pocket | — | *E1C Accent Lamp - Driver Door Handle* |
| E1L | Accent Lamp – Overhead Console | — | In the passenger compartment, at the front of the headliner, in the overhead console | — | *E1L Accent Lamp - Overhead Console* |

| | | | | | |
|---|---|---|---|---|---|
| E1M | Accent Lamp – Passenger Door Handle | — | In the passenger compartment, in the right front door handle pocket | — | *E1M Accent Lamp - Passenger Door Handle* |
| E2A | Marker Lamp – Endgate | — | Outside the vehicle, at the bottom middle of the tailgate | — | *E2A Marker Lamp - Endgate* |
| E2LF | Side Marker Lamp – Left Front | — | Outside the vehicle, at the left front corner, mounted in the left headlight assembly | — | — |
| E2LR | Side Marker Lamp – Left Rear | Z88 | Outside the vehicle, at the left rear corner, mounted in the left tail light assembly | — | — |
| E2RF | Side Marker Lamp – Right Front | — | Outside the vehicle, at the right front corner, mounted in the right headlight assembly | — | — |
| E2RR | Side Marker Lamp – Right Rear | Z88 | Outside the vehicle, at the right rear corner, mounted in the right tail light assembly | — | — |
| E4AA | Park Lamp – Lower Left | — | Outside the vehicle, at the left front corner, mounted in the left headlight assembly | — | — |
| E4C | Daytime Running Lamp – Left | GMC with SLT | Outside the vehicle, at the left front corner, mounted in the left headlight assembly | *Front of Vehicle (GMC) Components* | — |
| E4D | Daytime Running Lamp – Right | GMC with SLT | Outside the vehicle, at the right front corner, mounted in the right headlight assembly | — | — |
| E4E | Headlamp – Left High Beam | X88 | Outside the vehicle, at the left front corner, mounted in the left headlight assembly | *Front of Vehicle (Chevrolet) Components* | — |
| E4F | Headlamp – Right High Beam | X88 | Outside the vehicle, at the right front corner, mounted in the right headlight assembly | — | — |
| E4G | Headlamp – Left Low Beam | — | Outside the vehicle, at the left front corner, mounted in the left headlight assembly | • *Front of Vehicle (Chevrolet) Components*<br>• *Front of Vehicle (GMC) Components* | — |
| E4H | Headlamp – Right Low Beam | — | Outside the vehicle, at the right front corner, mounted in the right headlight assembly | — | — |
| E4J | Park Lamp – Left Front | — | Outside the vehicle, at the left front corner, mounted in the left headlight assembly | *Front of Vehicle (GMC) Components* | — |
| E4K | Park Lamp – Right Front | — | Outside the vehicle, at the right front corner, mounted in the right headlight assembly | — | — |
| E4LF | Turn Signal Lamp – Left Front | — | Outside the vehicle, at the left front corner, mounted in the left headlight assembly | — | — |
| E4N | Park/Turn Signal Lamp – Left | Z88 | Outside the vehicle, at the left front corner, mounted in the left headlight assembly | *Front of Vehicle (GMC) Components* | — |
| E4P | Park/Turn Signal Lamp – Right | Z88 | Outside the vehicle, at the right front corner, mounted in the right headlight assembly | — | — |
| E4Q | Park/Turn Signal Lamp – Left Lower | X88 | Outside the vehicle, at the left front corner, mounted in the left headlight assembly | *Front of Vehicle (Chevrolet) Components* | — |
| E4R | Park/Turn Signal Lamp – Right Lower | X88 | Outside the vehicle, at the right front corner, mounted in the right headlight assembly | — | — |
| E4RF | Turn Signal Lamp – Right Front | — | Outside the vehicle, at the right front corner, mounted in the right headlight assembly | — | — |

| | | | | | |
|---|---|---|---|---|---|
| E4S | Park/Turn Signal Lamp – Left Upper | X88 | Outside the vehicle, at the left front corner, mounted in the left headlight assembly | *Front of Vehicle (Chevrolet) Components* | — |
| E4T | Park/Turn Signal Lamp – Right Upper | X88 | Outside the vehicle, at the right front corner, mounted in the right headlight assembly | — | — |
| E4Y | Turn Signal Repeater Lamp – Left | — | Outside the vehicle, at the front of the driver door, part of the outside rearview mirror | — | — |
| E4Z | Turn Signal Repeater Lamp – Right | — | Outside the vehicle, at the front of the passenger door, part of the outside rearview mirror | — | — |
| E5A | Backup Lamp – Left | — | Outside the vehicle, at the left rear corner, mounted in the left tail light assembly | *Rear of Vehicle Components* | — |
| E5AG | Tail/Stop and Turn Signal Lamp – Left Upper | — | Outside the vehicle, at the left rear corner, mounted in the left tail light assembly | — | — |
| E5AH | Tail/Stop and Turn Signal Lamp – Right Upper | — | Outside the vehicle, at the right rear corner, mounted in the right tail light assembly | *Rear of Vehicle Components* | — |
| E5AL | Tail Lamp – Right Outer | — | Outside the vehicle, at the right rear corner, mounted in the right tail light assembly | — | — |
| E5B | Backup Lamp – Right | — | Outside the vehicle, at the right rear corner, mounted in the right tail light assembly | *Rear of Vehicle Components* | — |
| E5E | Tail Lamp – Left | — | Outside the vehicle, at the left rear corner, mounted in the left tail light assembly | — | — |
| E5F | Tail Lamp – Right | — | Outside the vehicle, at the right rear corner, mounted in the right tail light assembly | — | — |
| E5U | Tail/Stop and Turn Signal Lamp – Left Lower | — | Outside the vehicle, at the left rear corner, mounted in the left tail light assembly | *Rear of Vehicle Components* | — |
| E5V | Tail/Stop and Turn Signal Lamp – Right Lower | — | Outside the vehicle, at the right rear corner, mounted in the right tail light assembly | — | — |
| E6 | Center High Mounted Stop Lamp | — | Outside the vehicle, at the top center of the rear window | *Rear of Vehicle Components* | — |
| E7L | License Plate Lamp – Left | — | Outside the vehicle, mounted in the middle of the rear bumper | — | *E7L License Plate Lamp - Left* |
| E7R | License Plate Lamp – Right | — | Outside the vehicle, mounted in the middle of the rear bumper | *Rear of Vehicle Components* | *E7R License Plate Lamp - Right* |
| E8YD | Outside Rearview Mirror Courtesy Lamp – Driver | — | Outside the vehicle, at the front of the driver door, part of the outside rearview mirror | — | — |
| E8YP | Outside Rearview Mirror Courtesy Lamp – Passenger | — | Outside the vehicle, at the front of the passenger door, part of the outside rearview mirror | — | — |
| E13LA | Headlamp Assembly – Left | — | Outside the vehicle, at the left front corner | — | — |
| E13RA | Headlamp Assembly – Right | — | Outside the vehicle, at the right front corner | — | — |
| E14A | Seat Heating Element – Driver Back | — | In the passenger compartment, in the driver seat back | — | — |
| E14B | Seat Heating Element – Driver Cushion | — | In the passenger compartment, in the driver seat cushion | — | — |

| | | | | | |
|---|---|---|---|---|---|
| E14C | Seat Heating Element – Passenger Back | — | In the passenger compartment, in the passenger seat back | — | — |
| E14D | Seat Heating Element – Passenger Cushion | — | In the passenger compartment, in the passenger seat cushion | — | — |
| E15 | Steering Wheel Heater | — | In the passenger compartment, part of the steering wheel | — | — |
| E17D | Outside Rearview Mirror Glass – Driver | — | Outside the vehicle, at the front of the driver door, part of the outside rearview mirror | — | — |
| E17P | Outside Rearview Mirror Glass – Passenger | — | Outside the vehicle, at the front of the passenger door, part of the outside rearview mirror | — | — |
| E18 | Rear Defogger Grid | — | At the rear of the passenger compartment, part of the rear window glass | *Rear of Vehicle Components* | *E18 Rear Defogger Grid* |
| E28 | Center Console Compartment Lamp | — | In the passenger compartment, between the front seats, inside the center console storage bin | — | *E28 Center Console Compartment Lamp* |
| E29LF | Fog Lamp – Left Front | T3U | Outside the vehicle, at the left front corner, in the front bumper, below the headlight assembly | • *Front of Vehicle (Chevrolet) Components*<br>• *Front of Vehicle (GMC) Components* | *E29LF Fog Lamp - Left Front* |
| E29RF | Fog Lamp – Right Front | T3U | Outside the vehicle, at the right front corner, in the front bumper, below the headlight assembly | — | *E29RF Fog Lamp - Right Front* |
| E31L | Sunshade Mirror Lamp – Left | — | In the passenger compartment, at the left front of the headliner | *Headliner Components* | — |
| E31R | Sunshade Mirror Lamp – Right | — | In the passenger compartment, at the right front of the headliner | — | — |
| E33L | Cargo Lamp – Left | — | Outside the vehicle, beneath the top of the left side of the bed | — | — |
| E33R | Cargo Lamp – Right | — | Outside the vehicle, beneath the top of the right side of the bed | — | — |
| E37B | Dome/Reading Lamps – 2nd Row | — | In the passenger compartment, near the center of the headliner | *Headliner Components* | — |
| E37EL | Dome/Reading Lamps – Front Overhead Console Left | — | In the passenger compartment, at the left side of the overhead console | — | *E37EL Dome/Reading Lamps - Front Overhead Console Left* |
| E37ER | Dome/Reading Lamps – Front Overhead Console Right | — | In the passenger compartment, at the right side of the overhead console | *Headliner Components* | *E37ER Dome/Reading Lamps - Front Overhead Console Right* |
| E42L | Tail Lamp Assembly – Left | — | Outside the vehicle, at the left rear corner of the vehicle | — | — |
| E42R | Tail Lamp Assembly – Right | — | Outside the vehicle, at the right rear corner of the vehicle | — | — |
| E52 | Reductant Line Heater | LML | Under the vehicle, above the reductant tank | — | — |
| E53 | Reductant Tank Heater | LML | Under the vehicle, inside the reductant tank | — | — |
| F101 | Passenger Instrument Panel Air Bag | — | In the passenger compartment, behind the instrument panel upper glove box | *Rear of Instrument Panel Components* | *F101 Passenger Instrument Panel Air Bag* |

| | | | | | |
|---|---|---|---|---|---|
| F105L | Roof Rail Air Bag – Left | — | In the passenger compartment, along the left side of the headliner | — | — |
| F105R | Roof Rail Air Bag – Right | — | In the passenger compartment, along the right side of the headliner | *Roof Rail Air Bags* | — |
| F106D | Seat Side Air Bag – Driver | — | In the passenger compartment, in the outboard side of the driver seat back | — | — |
| F106P | Seat Side Air Bag – Passenger | — | In the passenger compartment, in the outboard side of the passenger seat back | — | — |
| F107 | Steering Wheel Air Bag | — | In the passenger compartment, mounted to the middle of the steeing wheel | — | — |
| F112D | Seat Belt Retractor Pretensioner – Driver | — | In the passenger compartment, at the base of the driver side B-pillar | — | *F112D Seat Belt Retractor Pretensioner - Driver* |
| F112P | Seat Belt Retractor Pretensioner – Passenger | — | In the passenger compartment, at the base of the passenger side B-pillar | — | *F112P Seat Belt Retractor Pretensioner - Passenger* |
| F113D | Seat Belt Anchor Pretensioner – Driver | — | In the passenger compartment, mounted to the outboard driver seat track | — | — |
| F113P | Seat Belt Anchor Pretensioner – Passenger | — | In the passenger compartment, mounted to the outboard passenger seat track | — | — |
| G1 | A/C Compressor | — | In the engine compartment, mounted on the lower front of the engine | — | — |
| G12 | Fuel Pump | — | Under the vehicle, in the fuel tank, part of the fuel pump and level sensor assembly | — | *G12 Fuel Pump* |
| G13 | Generator | — | In the engine compartment, at the top left front of the engine | *Left Side of Engine Components (L96)* | *G13 Generator X2* |
| G24 | Windshield Washer Pump | — | In the engine compartment, attached to the washer fluid reservoir, below the left headlamp assembly | — | *G24 Windshield Washer Pump* |
| G33 | Reductant Pump | LML | Under the vehicle, above the reductant tank | — | — |
| K9 | Body Control Module | — | In the passenger compartment, behind the driver side of the instrument panel, outboard of the steering column | *Rear of Instrument Panel Components* | • *K9 Body Control Module X5*<br>• *K9 Body Control Module X2*<br>• *K9 Body Control Module X1*<br>• *K9 Body Control Module X6*<br>• *K9 Body Control Module X7*<br>• *K9 Body Control Module X4* |
| K17 | Electronic Brake Control Module | — | Under the vehicle, mounted to the left side of the frame rail | — | *K17 Electronic Brake Control Module* |
| K20 | Engine Control Module | — | In the engine compartment, left front of the engine, near the underhood fuse block | *Left Side of Engine Compartment Components* | • *K20 Engine Control Module X2 (LML)*<br>• *K20 Engine Control Module X3 (LML)*<br>• *K20 Engine Control Module X3 (L96)*<br>• *K20 Engine Control Module X1 (LML)*<br>• *K20 Engine Control Module X2 (L96)*<br>• *K20 Engine Control Module X1 (L96)* |

| | | | | | |
|---|---|---|---|---|---|
| K29 | Seat Heating Control Module | — | In the passenger compartment, under the front of the driver seat | — | — |
| K32 | Steering Wheel Heating Control Module | UVD | In the passenger compartment, in the steering wheel, behind the driver air bag | — | — |
| K33 | HVAC Control Module | — | In the passenger compartment, behind the passenger side of the instrument panel, above the hush panel | — | — |
| K34 | Glow Plug Control Module | LML | In the engine compartment, mounted to the top of the engine | — | *K34 Glow Plug Control Module (LML)* |
| K36 | Inflatable Restraint Sensing and Diagnostic Module | — | In the passenger compartment, bolted to the floor between the front seats | — | • *K36 Inflatable Restraint Sensing and Diagnostic Module X1*<br>• *K36 Inflatable Restraint Sensing and Diagnostic Module X2* |
| K38 | Chassis Control Module | — | Under the vehicle, mounted to the bracket above the spare tire | *Chassis Components* | — |
| K40 | Seat Memory Control Module | A45 | In the passenger compartment, under the driver seat | — | — |
| K41 | Front and Rear Parking Assist Control Module | UD5 or UD7 | In the passenger compartment, bolted to the passenger side of the rear wall, behind the rear seat | — | • *K41 Front and Rear Parking Assist Control Module X2*<br>• *K41 Front and Rear Parking Assist Control Module X1*<br>• *K41 Front and Rear Parking Assist Control Module X3* |
| K44 | Power Take-Off Control Module | PTO | Under the vehicle, mounted to the passenger side of the frame | *Underbody Components (LML)* | • *K44 Power Take-Off Control Module X2*<br>• *K44 Power Take-Off Control Module X1* |
| K53D | Seat Blower Assembly – Driver Back | KB6 | In the passenger compartment, in the driver seat back | — | — |
| K53P | Seat Blower Assembly – Passenger Back | KB6 | In the passenger compartment, in the passenger seat cback | — | — |
| K55D | Seat Blower Assembly – Driver Cushion | KB6 | In the passenger compartment, in the driver seat cushion | — | — |
| K55P | Seat Blower Assembly – Passenger Cushion | KB6 | In the passenger compartment, in the passenger seat cushion | — | — |
| K69 | Transfer Case Control Module | — | In the passenger compartment, bolted to the bulkhead at the right side of the driver footwell | — | • *K69 Transfer Case Control Module X3*<br>• *K69 Transfer Case Control Module X1*<br>• *K69 Transfer Case Control Module X2* |
| K71 | Transmission Control Module | — | In the engine compartment, mounted to the left side of the engine cooling fan shroud | — | *K71 Transmission Control Module* |

| | | | | | |
|---|---|---|---|---|---|
| K73 | Telematics Communication Interface Control Module | — | In the passenger compartment, in the middle of the instrument panel, behind the info display module | *Rear of Instrument Panel Components* | • *K73 Telematics Communication Interface Control Module X1*<br>• *K73 Telematics Communication Interface Control Module X2* |
| K74 | Human Machine Interface Control Module | — | In the passenger compartment, behind the passenger side of the instrument panel, above the hush panel | — | — |
| K77 | Remote Control Door Lock Receiver | — | In the passenger compartment, at the top center of the windshield | — | — |
| K85 | Passenger Presence Module | — | In the passenger compartment, in the passenger seat cushion | — | — |
| K89 | Immobilizer Control Module | — | In the passenger compartment, on the driver side, near the ignition cylinder | — | — |
| K109 | Frontview Camera Module | Y65 | In the passenger compartment, behind the inside rearview mirror | *Headliner Components* | — |
| K111 | Fuel Pump Driver Control Module | — | Under the vehicle, mounted to the bracket above the spare tire | — | — |
| K119 | CNG Control Module | LC8 | In the engine compartment, mounted to a bracket that is mounted to the bottom of the battery tray, on the left front of the engine compartment | — | — |
| K130 | Fuel Pump Disable Control Module | LC8 | In the engine compartment, mounted to a bracket that is mounted to the bottom of the battery tray, on the left front of the engine compartment | — | — |
| K133 | Trailer Brake Power Control Module | — | Under the vehicle, mounted to the bracket above the spare tire | — | — |
| K163D | Seat Control Module – Driver | — | In the passenger compartment, mounted to the bottom of the driver seat | — | — |
| M4 | Air Inlet Door Actuator | — | In the passenger compartment, behind the instrument panel glove box | — | — |
| M5 | Adjustable Pedal Motor | — | In the passenger compartment, part of the accelerator pedal bracket assembly | — | *M5 Adjustable Pedal Motor* |
| M6L | Air Temperature Door Actuator – Left | — | In the passenger compartment, part of HVAC module, behind the instrument panel | — | — |
| M6R | Air Temperature Door Actuator – Right | CJ2 | In the passenger compartment, part of HVAC module, behind the instrument panel | — | — |
| M7 | Transmission Shift Lock Control Solenoid Actuator | — | In the passenger compartment, right side of the steering wheel, attached to transmission shift lever | — | — |
| M8 | Blower Motor | — | In the passenger compartment, under the rigth side of the instrument panel, above the hush panel | — | — |
| M14A | Door Lock Actuator – Endgate | — | Outside the vehicle, at the top middle of the tailgate | — | — |
| M14LR | Door Lock Actuator – Left Rear | — | In the passenger compartment, in the rear middle of the left rear door | — | — |

| | | | | | |
|---|---|---|---|---|---|
| M14P | Door Lock Actuator – Passenger | — | In the passenger compartment, in the rear middle of the right rear door | — | — |
| M26 | Front Axle Engagement Actuator | — | Under the vehicle, mounted to the front axle | *Front Axle Components* | — |
| M28L | High Beam Solenoid Actuator – Left | Z88 | Outside the vehicle, at the left front corner, part of the headlight assembly | — | — |
| M28R | High Beam Solenoid Actuator – Right | Z88 | Outside the vehicle, at the right front corner, part of the headlight assembly | — | — |
| M37L | Mode Door Actuator – Left | — | In the passenger compartment, behind the left side of the instrument panel, on the upper left side of the HVAC module | — | — |
| M50D | Seat Front Vertical Motor – Driver | — | In the passenger compartment, under the driver seat | — | — |
| M50P | Seat Front Vertical Motor – Passenger | — | In the passenger compartment, under the passenger seat | — | — |
| M51D | Seat Horizontal Motor – Driver | — | In the passenger compartment, under the driver seat | — | — |
| M51P | Seat Horizontal Motor – Passenger | — | In the passenger compartment, under the passenger seat | — | — |
| M52D | Seat Lumbar Support Horizontal Motor – Driver | — | In the passenger compartment, in the driver seat back | — | — |
| M52P | Seat Lumbar Support Horizontal Motor – Passenger | — | In the passenger compartment, in the passenger seat back | — | — |
| M54D | Seat Lumbar Support Vertical Motor – Driver | — | In the passenger compartment, in the driver seat back | — | — |
| M54P | Seat Lumbar Support Vertical Motor – Passenger | — | In the passenger compartment, in the passenger seat back | — | — |
| M55D | Seat Rear Vertical Motor – Driver | — | In the passenger compartment, under the driver seat | — | — |
| M55P | Seat Rear Vertical Motor – Passenger | — | In the passenger compartment, under the passenger seat | — | — |
| M56D | Seat Recline Motor – Driver | — | In the passenger compartment, in the driver seat back | — | — |
| M56P | Seat Recline Motor – Passenger | — | In the passenger compartment, in the passenger seat back | — | — |
| M63 | Sliding Rear Window Motor | A48 | In the passenger compartment, mounted the the passenger side of the rear wall, behind the rear seat | — | *M63 Sliding Rear Window Motor* |
| M64 | Starter Motor | — | In the engine compartment, mounted to the rear of the engine block | • *Right Side of Engine Components (L96)*<br>• *Underbody Components (LML)* | *M64 Starter Motor X1* |
| M69 | Sunroof Motor | CF5 | In the passenger compartment, at the front of the roof, above the headliner | — | — |
| M74D | Window Motor – Driver | — | In the passenger compartment, in the driver door | *Driver Door Components* | *M74D Window Motor - Driver* |

| | | | | | |
|---|---|---|---|---|---|
| M74LR | Window Motor – Left Rear | except Regular Cab | In the passenger compartment, in the left rear door | — | *M74LR Window Motor - Left Rear* |
| M74P | Window Motor – Passenger | — | In the passenger compartment, in the passenger door | *Passenger Door Components* | — |
| M74RR | Window Motor – Right Rear | except Regular Cab | In the passenger compartment, in the right rear door | — | *M74RR Window Motor - Right Rear* |
| M75 | Windshield Wiper Motor | — | Outside the vehicle, at the left rear of the engine compartment, below the left lower corner of the windshield | *Left Side of Engine Compartment Components* | *M75 Windshield Wiper Motor* |
| M77D | Outside Rearview Mirror Motor – Driver | — | Outside the vehicle, at the front of the driver door, part of the outside rearview mirror | — | — |
| M77P | Outside Rearview Mirror Motor – Passenger | — | Outside the vehicle, at the front of the passenger door, part of the outside rearview mirror | — | — |
| M78D | Outside Rearview Mirror Folding Motor – Driver | DL3 | Outside the vehicle, at the front of the driver door, part of the outside rearview mirror | — | — |
| M78P | Outside Rearview Mirror Folding Motor – Passenger | DL3 | Outside the vehicle, at the front of the passenger door, part of the outside rearview mirror | — | — |
| P12 | Horn | — | In the engine compartment, at the left side of the radiator core support | *Left Side of Engine Compartment Components* | *P12 Horn* |
| P14 | Passenger Air Bag Disabled Indicator | — | In the passenger compartment, at the front of the roof, in the overhead console | — | *P14 Passenger Air Bag Disabled Indicator* |
| P16 | Instrument Cluster | — | In the passenger compartment, in the driver side of the instrument panel | *Front of Instrument Panel Components* | *P16 Instrument Cluster* |
| P17 | Info Display Module | — | In the passenger compartment, at the center of the instrument panel | — | • *P17 Info Display Module X1*<br>• *P17 Info Display Module X2* |
| P19AC | Speaker – Subwoofer | UQA | In the passenger compartment, under the instrument panel, at the front of the center console | — | *P19AC Speaker - Subwoofer* |
| P19AG | Speaker – Left Front Door | — | In the passenger compartment, in the driver door | *Driver Door Components* | *P19AG Speaker - Left Front Door* |
| P19AH | Speaker – Right Front Door | — | In the passenger compartment, in the passenger door | — | — |
| P19AL | Speaker – Left Rear Door | except Regular Cab | In the passenger compartment, in the left rear door | *Left Rear Door Components* | *P19AL Speaker - Left Rear Door* |
| P19AM | Speaker – Right Rear Door | except Regular Cab | In the passenger compartment, in the right rear door | — | *P19AM Speaker - Right Rear Door* |
| P19AN | Speaker – Left Rear Trim Panel | Regular Cab | In the passenger compartment, at the left rear corner of the cab, near the driver seat headrest | — | *P19AN Speaker - Left Rear Trim Panel* |
| P19AP | Speaker – Right Rear Trim Panel | Regular Cab | In the passenger compartment, at the right rear corner of the cab, near the passenger seat headrest | — | *P19AP Speaker - Right Rear Trim Panel* |
| P19J | Speaker – Left Instrument Panel | UQ3 | In the passenger compartment, in the top of the left side of the instrument panel | *Front of Instrument Panel Components* | *P19J Speaker - Left Instrument Panel* |
| P19W | Speaker – Right Instrument Panel | UQ3 | In the passenger compartment, in the top of the | — | *P19W Speaker - Right Instrument Panel* |

| | | | | | |
|---|---|---|---|---|---|
| P22A | Video Display – 2nd Row | U42 | In the passenger compartment, near the center of the headliner | *Headliner Components* | — |
| P43 | Collision Alert Indicators | Y65 | In the passenger compartment, in the top of the instrument panel, near the windshield, in front of the driver | — | *P43 Collision Alert Indicators* |
| P45LR | Seat Haptic Movement Motor – Driver Left Rear | Y65 | In the passenger compartment, in the left side of the driver seat cushion | — | — |
| P45RR | Seat Haptic Movement Motor – Driver Right Rear | Y65 | In the passenger compartment, in the right side of the driver seat cushion | — | — |
| Q2 | A/C Compressor Clutch | — | In the engine compartment, at the front of the A/C compressor | • *Right Side of Engine Components (L96)*<br>• *Left Side of Engine Components (LML)* | *Q2 A/C Compressor Clutch* |
| Q6 | Camshaft Position Actuator Solenoid Valve | — | In the engine compartment, at the front right side of the engine | — | *Q6 Camshaft Position Actuator Solenoid Valve* |
| Q8 | Control Solenoid Valve Assembly | — | Under the vehicle, inside the transmission assembly | — | *Q8 Control Solenoid Valve Assembly X1* |
| Q12 | Evaporative Emission Purge Solenoid Valve | — | In the engine compartment, at the top middle rear of the engine | *Left Side of Engine Components (L96)* | *Q12 Evaporative Emission Purge Solenoid Valve* |
| Q13 | Evaporative Emission Vent Solenoid Valve | — | On the underbody, at the top leftt side of the fuel tank | — | *Q13 Evaporative Emission Vent Solenoid Valve* |
| Q14 | Exhaust Gas Recirculation Valve | — | In the engine compartment, on the top left middle of the engine | — | *Q14 Exhaust Gas Recirculation Valve (LML)* |
| Q17A | Fuel Injector 1 | — | In the engine compartment, in the cylinder head above cylinder 1 | *Left Side of Engine Components (L96)* | • *Q17A Fuel Injector 1 (LML)*<br>• *Q17A Fuel Injector 1 (L96)* |
| Q17B | Fuel Injector 2 | — | In the engine compartment, in the cylinder head above cylinder 2 | — | • *Q17B Fuel Injector 2 (LML)*<br>• *Q17B Fuel Injector 2 (L96)* |
| Q17C | Fuel Injector 3 | — | In the engine compartment, in the cylinder head above cylinder 3 | *Left Side of Engine Components (L96)* | • *Q17C Fuel Injector 3 (LML)*<br>• *Q17C Fuel Injector 3 (L96)* |
| Q17D | Fuel Injector 4 | — | In the engine compartment, in the cylinder head above cylinder 4 | — | • *Q17D Fuel Injector 4 (LML)*<br>• *Q17D Fuel Injector 4 (L96)* |
| Q17E | Fuel Injector 5 | — | In the engine compartment, in the cylinder head above cylinder 5 | • *Left Side of Engine Components (LML)*<br>• *Left Side of Engine Components (L96)* | • *Q17E Fuel Injector 5 (L96)*<br>• *Q17E Fuel Injector 5 (LML)* |
| Q17F | Fuel Injector 6 | — | In the engine compartment, in the cylinder head above cylinder 6 | — | • *Q17F Fuel Injector 6 (LML)*<br>• *Q17F Fuel Injector 6 (L96)* |

| | | | | | |
|---|---|---|---|---|---|
| Q17G | Fuel Injector 7 | — | In the engine compartment, in the cylinder head above cylinder 7 | • *Left Side of Engine Components (L96)*<br>• *Left Side of Engine Components (LML)* | • *Q17G Fuel Injector 7 (L96)*<br>• *Q17G Fuel Injector 7 (LML)* |
| Q17H | Fuel Injector 8 | — | In the engine compartment, in the cylinder head above cylinder 8 | — | • *Q17H Fuel Injector 8 (L96)*<br>• *Q17H Fuel Injector 8 (LML)* |
| Q18A | Fuel Pressure Regulator 1 | LML | In the engine compartment, mounted on top of the fuel injection pump | — | — |
| Q23 | Line Pressure Control Solenoid Valve | — | Under the vehicle, inside the transmission assembly | — | — |
| Q38 | Throttle Body | — | In the engine compartment, at the top of the engine, mounted to the intake manifold inlet | *Right Side of Engine Components (L96)* | • *Q38 Throttle Body (L96)*<br>• *Q38 Throttle Body (LML)* |
| Q43 | Valve Lifter Oil Manifold Assembly | — | In the engine compartment, mounted in the valve lifter valley below the intake manifold | — | — |
| Q44 | Engine Oil Pressure Control Solenoid Valve | — | In the engine compartment, at the front of the engine, behind the front cover | — | — |
| Q46 | A/C Compressor Solenoid Valve | — | In the front of the engine compartment, part of the compressor assembly | • *Right Side of Engine Components (L96)*<br>• *Left Side of Engine Components (LML)* | *Q46 A/C Compressor Solenoid Valve* |
| Q47 | Exhaust Gas Recirculation Cooler Bypass Solenoid Valve | LML | In the engine compartment, on the top right rear of the engine | — | *Q47 Exhaust Gas Recirculation Cooler Bypass Solenoid Valve (LML)* |
| Q61 | Reductant Injector | LML | Under the vehicle, attached to the exhaust pipe, near the rear of the catalytic converter | *Underbody Components (LML)* | *Q61 Reductant Injector (LML)* |
| Q62 | Reductant Purge Solenoid Valve | LML | Under the vehicle, above the reductant tank | — | — |
| Q67 | Exhaust Aftertreatment Fuel Injector | LML | In the engine compartment, on the right rear side of the engine, above fuel injector 5 | — | *Q67 Exhaust Aftertreatment Fuel Injector (LML)* |
| Q68A | CNG Cut-Off Solenoid Valve 1 | LC8 | Underneath the vehicle, part of the CNG pressure regulator | — | — |
| Q68B | CNG Cut-Off Solenoid Valve 2 | LC8 | In the CNG tank box, part of the CNG Fuel Tank Assembly | — | — |
| Q70A | Alternative Fuel Injector 1 | LC8 | In the engine compartment, near the left side engine rocker cover above cylinder number 1 | — | — |
| Q70B | Alternative Fuel Injector 2 | LC8 | In the engine compartment, near the right side engine rocker cover above cylinder number 2 | — | — |
| Q70C | Alternative Fuel Injector 3 | LC8 | In the engine compartment, near the left side engine rocker cover above cylinder number 3 | — | — |
| Q70D | Alternative Fuel Injector 4 | LC8 | In the engine compartment, near the right side engine rocker cover above cylinder number 4 | — | — |
| Q70E | Alternative Fuel Injector 5 | LC8 | In the engine compartment, near the left side engine rocker cover above cylinder number 5 | — | — |

| | | | | | |
|---|---|---|---|---|---|
| Q70F | Alternative Fuel Injector 6 | LC8 | In the engine compartment, near the right side engine rocker cover above cylinder number 6 | — | — |
| Q70G | Alternative Fuel Injector 7 | LC8 | In the engine compartment, near the left side engine rocker cover above cylinder number 7 | — | — |
| Q70H | Alternative Fuel Injector 8 | LC8 | In the engine compartment, near the right side engine rocker cover above cylinder number 8 | — | — |
| R6A | Terminating Resistor – High Speed Bus | — | Under the vehicle, near the left frame rail, above the spare tire, taped in the chassis harness | — | *R6A Terminating Resistor - High Speed Bus* |
| S5 | Center Console Compartment Lamp Switch | — | In the passenger compartment, under the center console compartment lid | — | *S5 Center Console Compartment Lamp Switch* |
| S12 | Dome Lamp Switch | — | In the passenger compartment, near the center of the headliner, part of the dome lamp | — | *S12 Dome Lamp Switch* |
| S13D | Door Lock Switch – Driver | — | In the passenger compartment, in the driver door handle trim panel | *Driver Door Components* | *S13D Door Lock Switch - Driver* |
| S13P | Door Lock Switch – Passenger | — | In the passenger compartment, in the passenger door handle trim panel | — | *S13P Door Lock Switch - Passenger* |
| S16 | Driver Information Center Switch | — | In the passenger compartment, in the center of the I/P, between the instrument cluster and the air vents | — | — |
| S25 | Garage Door Opener | — | In the passenger compartment, in the overhead console | *Headliner Components* | *S25 Garage Door Opener* |
| S30 | Headlamp Switch | — | In the passenger compartment, left of the steering column | — | *S30 Headlamp Switch* |
| S31D | Seat Heating and Cooling Switch – Driver | — | In the passenger compartment, on driver side of the HVAC controls | *Front of Instrument Panel Components* | *S31D Seat Heating and Cooling Switch - Driver* |
| S31P | Seat Heating and Cooling Switch – Passenger | — | In the passenger compartment, on passenger side of the HVAC controls | — | *S31P Seat Heating and Cooling Switch - Passenger* |
| S33 | Horn Switch | — | In the passenger compartment, in the center of the steering wheel, behind the driver side air bag | — | — |
| S39 | Ignition Switch | — | In the passenger compartment, behind the steering wheel, on the right side of the steering column | — | — |
| S47D | Seat Memory Switch – Driver | A45 | In the passenger compartment, on the driver door panel above the driver door switch assembly | — | *S47D Seat Memory Switch - Driver* |
| S48A | Multifunction Switch – Instrument Panel | — | In the passenger compartment, near the center of the instrument panel | *Front of Instrument Panel Components* | • *S48A Multifunction Switch - Instrument Panel X2*<br>• *S48A Multifunction Switch - Instrument Panel X1* |
| S51 | Telematics Button Assembly | UE1 | In the passenger compartment, part of the inside rearview mirror | — | — |
| S52 | Outside Rearview Mirror Switch | — | In the passenger compartment, on the driver door trim panel | *Driver Door Components* | *S52 Outside Rearview Mirror Switch* |
| S63 | Roof Beacon Switch | — | In the passenger compartment, behind the overhead console, near the top | — | *S63 Roof Beacon Switch* |

| | | | | | |
|---|---|---|---|---|---|
| S64D | Seat Adjuster Switch – Driver | — | In the passenger compartment, mounted to the outboard side of the driver seat cushion | — | — |
| S64P | Seat Adjuster Switch – Passenger | — | In the passenger compartment, mounted to the outboard side of the passenger seat cushion | — | — |
| S68 | Sliding Rear Window Switch | — | In the passenger compartment, in the overhead console | — | *S68 Sliding Rear Window Switch* |
| S70E | Steering Wheel Controls Switch – Radio Presets | — | In the passenger compartment, on the left rear side of the steering wheel | — | — |
| S70F | Steering Wheel Controls Switch – Radio Volume | — | In the passenger compartment, on the right rear side of the steering wheel | — | — |
| S70L | Steering Wheel Controls Switch – Left | — | In the passenger compartment, on the left side of the steering wheel | — | — |
| S70R | Steering Wheel Controls Switch – Right | — | In the passenger compartment, on the right side of the steering wheel | — | — |
| S72 | Sunroof Switch | CF5 | In the passenger compartment, at the front of the headliner, in the overhead console | *Headliner Components* | *S72 Sunroof Switch* |
| S74 | Tow/Haul Mode Switch | — | In the passenger compartment, part of the automatic transmission shift lever | — | — |
| S76 | Trailer Brake Control Switch | — | In the passenger compartment, lower left side of the instrument panel | *Front of Instrument Panel Components* | *S76 Trailer Brake Control Switch* |
| S77 | Transfer Case Shift Control Switch | — | Under the vehicle, on the top of the transfer case | — | *S77 Transfer Case Shift Control Switch* |
| S78 | Turn Signal/Multifunction Switch | — | In the passenger compartment, on the left side of the steering column | — | — |
| S79D | Window Switch – Driver | — | In the passenger compartment, behind the driver door trim panel, center of the door | *Driver Door Components* | *S79D Window Switch - Driver* |
| S79LR | Window Switch – Left Rear | — | In the passenger compartment, at the center of the left rear door, on the door trim panel | — | *S79LR Window Switch - Left Rear* |
| S79P | Window Switch – Passenger | — | In the passenger compartment, on the passenger door trim panel, center of the door | *Passenger Door Components* | *S79P Window Switch - Passenger* |
| S79RR | Window Switch – Right Rear | — | In the passenger compartment, on the right rear door trim panel, center of the door | — | *S79RR Window Switch - Right Rear* |
| S104 | Fuel Type Select Switch | — | Mounted on instrument panel, to the left of HVAC control head | — | — |
| T1 | Accessory DC/AC Power Inverter Module | KI4 | In the instrument panel, right side of the steering colum | *Rear of Instrument Panel Components* | *T1 Accessory DC/AC Power Inverter Module* |
| T3 | Audio Amplifier | — | In the rear passenger compartment, mounted behind the rear seat, below the rear window | — | • *T3 Audio Amplifier X2*<br>• *T3 Audio Amplifier X4*<br>• *T3 Audio Amplifier X3*<br>• *T3 Audio Amplifier X1* |
| T4C | Radio Antenna Base | — | Outside the vehicle, mounted at the rear of the right front fender | — | — |

| | | | | | |
|---|---|---|---|---|---|
| T4E | Cellular Phone and Navigation Antenna | — | Outside the vehicle, at the front right of the roof | • *Front of Vehicle (Chevrolet) Components*<br>• *Front of Vehicle (GMC) Components* | — |
| T4G | Cellular Phone, Navigation, and Digital Radio Antenna | — | Outside the vehicle, at the front right of the roof | — | — |
| T4H | Digital Radio Antenna | — | Outside the vehicle, at the front right of the roof | — | — |
| T4M | Radio Antenna | — | Outside the vehicle, at the right rear of the hood | — | — |
| T8A | Ignition Coil 1 | — | In the engine compartment, at the top of the engine | *Left Side of Engine Components (L96)* | *T8A Ignition Coil 1 (L96)* |
| T8B | Ignition Coil 2 | — | In the engine compartment, at the top of the engine | — | *T8B Ignition Coil 2 (L96)* |
| T8C | Ignition Coil 3 | — | In the engine compartment, at the top of the engine | *Left Side of Engine Components (L96)* | *T8C Ignition Coil 3 (L96)* |
| T8D | Ignition Coil 4 | — | In the engine compartment, at the top of the engine | — | *T8D Ignition Coil 4 (L96)* |
| T8E | Ignition Coil 5 | — | In the engine compartment, at the top of the engine | *Left Side of Engine Components (L96)* | *T8E Ignition Coil 5 (L96)* |
| T8F | Ignition Coil 6 | — | In the engine compartment, at the top of the engine | — | *T8F Ignition Coil 6 (L96)* |
| T8G | Ignition Coil 7 | — | In the engine compartment, at the top of the engine | *Left Side of Engine Components (L96)* | *T8G Ignition Coil 7 (L96)* |
| T8H | Ignition Coil 8 | — | In the engine compartment, at the top of the engine | — | *T8H Ignition Coil 8 (L96)* |
| T12 | Automatic Transmission Assembly | — | Under the vehicle, mounted to the rear of the engine | — | — |
| T15 | Navigation Antenna Signal Splitter | — | In the passenger compartment, behind the instrument panel | — | — |
| X50A | Fuse Block – Underhood | — | In the engine compartment, top left near the inner fender | • *Left Side of Engine Compartment Components*<br>• *Engine Compartment Left Harness Routing* | — |
| X50D | Fuse Block – Battery | — | In the engine compartment, top right near the inner fender | — | — |
| X51L | Fuse Block – Instrument Panel Left | — | In the passenger compartment, left side of the instrument panel, behind side trim panel | *Passenger Compartment Left Harness Routing* | — |
| X51R | Fuse Block – Instrument Panel Right | — | In the passenger compartment, right side of the instrument panel, behind side trim panel | — | — |
| X54F | Relay Block – Alternative Fuel | LC8 | In the engine compartment, mounted to the front of the CNG Control Module bracket | — | — |
| X61A | Junction Block – Instrument Panel | except E29 | In the passenger compartment, under the instrument panel, left of the brake pedal | — | — |

| | | | | | |
|---|---|---|---|---|---|
| X63A | Junction Block – Rear Body | — | On the vehicle underbody, behind rear bumper, near the left frame rail | *Chassis Components* | — |
| X80A | Accessory Power Receptacle – Center Console 1 | — | In the passenger compartment, at the left of the center console | — | *X80A Accessory Power Receptacle - Center Console 1* |
| X80B | Accessory Power Receptacle – Center Console 2 | — | In the passenger compartment, at the right of the center console | — | *X80B Accessory Power Receptacle - Center Console 2* |
| X80D | Accessory Power Receptacle – Center Console Compartment | — | In the passenger compartment, between the driver and passenger seat, in the center console | — | — |
| X80E | Accessory Power Receptacle – Center Seat | — | In the passenger compartment, at the rear of the center console | — | — |
| X80J | Accessory Power Receptacle – Instrument Panel 1 | — | In the passenger compartment, at the left center of the instrument panel | • *Front of Instrument Panel Components*<br>• *Rear of Instrument Panel Components* | — |
| X80K | Accessory Power Receptacle – Instrument Panel 2 | — | In the passenger compartment, at the right center of the instrument panel | — | — |
| X80S | Accessory Power Receptacle – Instrument Panel 3 | — | In the passenger compartment, at the center of the instrument panel | — | *X80S Accessory Power Receptacle - Instrument Panel 3* |
| X81 | Accessory Power Receptacle – 110V AC | KI4 | In the passenger compartment, right front of the center console storage bin | • *Rear of Instrument Panel Components*<br>• *Front of Instrument Panel Components* | — |
| X82 | Audio/Video Input Adapter | IO6 | In the passenger compartment, at rear of the center console | — | *X82 Audio/Video Input Adapter* |
| X83 | Auxiliary Audio Input | — | In the passenger compartment, in the center console storage compartment | — | *X83 Auxiliary Audio Input* |
| X84 | Data Link Connector | — | In the passenger compartment, at the bottom of the driver side of the instrument panel | *Front of Instrument Panel Components* | *X84 Data Link Connector* |
| X85 | Steering Wheel Air Bag Coil | — | In the passenger compartment, behind the steering wheel | — | *X85 Steering Wheel Air Bag Coil* |
| X88 | Trailer Connector | — | On the vehicle exterior, at the rear of the vehicle, left of the license plate | *Rear of Vehicle Components* | *X88 Trailer Connector* |
| X92 | USB Receptacle | — | In the passenger compartment, left front of the center console storage bin | — | — |
| X96 | Alternative Fuel System Data Connector | LC8 | In the passenger compartment, at the bottom of the driver side of the instrument panel, clipped to the Data Link Connector mount | — | — |
| X100 | Front Bumper Harness To Forward Lamp Harness | — | In the engine compartment, near the center of the lower radiator support | • *Front Bumper Harness Routing*<br>• *Engine Compartment Right Harness Routing* | — |
| X102 | Engine Harness To Engine Cooling Fan Harness | — | In the engine compartment, at the lower left of the cooling fan housing | — | — |

| | | | | | |
|---|---|---|---|---|---|
| X111 | Engine Harness To Front Axle Harness | — | Under the vehicle, near the front axle | • *Engine Compartment Left Harness Routing*<br>• *Left Side of Engine Harness Routing (L96)* | — |
| X115 | Body Harness To Engine Harness | — | In the front of the engine compartment, near the upper left of the radiator support | — | — |
| X119 | Body Harness To Brake Clutch Jumper Harness | — | In the passenger compartment, left side of the instrument panel | *Passenger Compartment Left Harness Routing* | • *X119 Body Harness to Brake Clutch Jumper Harness (except E29)*<br>• *X119 Body Harness to Brake Clutch Jumper Harness (except E29)* |
| X125 | Engine Harness To Chassis Harness | — | Under the vehicle, on the top left of the frame rail, near the left front body mount | — | — |
| X150 | Body Harness To Forward Lamp Harness | — | In the engine compartment, above the right front wheel well | *Engine Compartment Right Harness Routing* | — |
| X171 | Engine Harness To Coil Jumper – Odd Harness | — | On the engine, near the ignition coils | — | — |
| X177 | Engine Harness to CNG Front Harness | LC8 | In the engine compartment, at the right front of the engine compartment, near the mass airflow sensor | — | — |
| X178 | CNG Rear Harness to CNG Front Harness | LC8 | In the engine compartment, to the left of the engine, below the fuse block, attached to the power steering hoses | — | — |
| X181 | Engine Harness to CNG Injector Harness | LC8 | In the engine compartment, near cylinder 1 fuel injector | — | — |
| X182 | Engine Harness to CNG Injector Harness | LC8 | In the engine compartment, near cylinder 2 fuel injector | — | — |
| X183 | Engine Harness to CNG Injector Harness | LC8 | In the engine compartment, near cylinder 3 fuel injector | — | — |
| X184 | Engine Harness to CNG Injector Harness | LC8 | In the engine compartment, near cylinder 4 fuel injector | — | — |
| X185 | Engine Harness to CNG Injector Harness | LC8 | In the engine compartment, near cylinder 5 fuel injector | — | — |
| X186 | Engine Harness to CNG Injector Harness | LC8 | In the engine compartment, near cylinder 6 fuel injector | — | — |
| X187 | Engine Harness to CNG Injector Harness | LC8 | In the engine compartment, near cylinder 7 fuel injector | — | — |
| X188 | Engine Harness to CNG Injector Harness | LC8 | In the engine compartment, near cylinder 8 fuel injector | — | — |
| X189 | CNG Injector Harness to CNG Front Harness | LC8 | In the engine compartment, to the left of the engine | — | — |
| X190 | CNG Front Harness to CNG Injector Harness | LC8 | In the engine compartment, to the left of the engine | — | — |
| X199 | CNG Front Harness to CNG Instrument Panel Harness | LC8 | In the engine compartment, to the left of the engine | — | — |

| | | | | | |
|---|---|---|---|---|---|
| X216 | Body Harness To HVAC Harness | — | In the passenger compartment, behind the lower right side of the instrument panel | *Passenger Compartment Right Harness Routing* | — |
| X217 | Body Harness To HVAC Harness | — | In the passenger compartment, behind the lower right side of the instrument panel | — | — |
| X225 | Body Harness To Instrument Panel Harness | — | In the passenger compartment, behind the lower left side of the instrument panel | *Passenger Compartment Left Harness Routing* | — |
| X275 | Body Harness To Instrument Panel Harness | — | In the passenger compartment, behind the lower right side of the instrument panel | — | — |
| X310 | Body Harness To Driver Seat Cushion Harness | — | In the passenger compartment, under the passenger seat | • *Passenger Compartment Right Harness Routing*<br>• *Passenger Compartment Left Harness Routing* | — |
| X314 | Body Harness To Center Seat Harness | — | In the passenger compartment, under the driver seat | — | — |
| X315 | Body Harness To Headliner Harness | — | In the passenger compartment, near the middle of the left A-pillar | *Passenger Compartment Left Harness Routing* | — |
| X320 | Body Harness To Passenger Seat Cushion Harness | — | In the passenger compartment, under the passenger seat | — | — |
| X350 | Chassis Harness to CNG Rear Harness | LC8 | Under the vehicle, at the top of the fuel tank, near the fuel pump and level sensor assembly | — | — |
| X380 | Body Harness to Roof Rail Jumper – Left Harness | — | In the passenger compartment, behind the left C-pillar, near the headliner | — | — |
| X390 | Body Harness To Roof Rail Jumper – Right Harness | — | In the passenger compartment, behind the right C-pillar, near the headliner | *Passenger Compartment Right Harness Routing* | — |
| X416 | Rear Bumper Harness | — | At the rear of the vehicle, behind the left side of the rear fascia | — | • *X416 Rear Bumper Harness to Rear Clearance Lamps (Left) Jumper Harness (except ZW9)*<br>• *X416 Rear Bumper Harness to Rear Clearance Lamps (Left) Jumper Harness (except ZW9)* |
| X417 | Rear Bumper Harness | — | At the rear of the vehicle, behind the left side of the rear fascia | *Rear Bumper Harness Routing* | — |
| X500 | Body Harness To Driver Door Harness | — | In the passenger compartment, behind the left side of the instrument panel | — | — |
| X505 | Driver Door Harness To Driver Door Trim Harness | — | In the driver door, behind the driver door panel | *Driver Door Harness Routing* | — |
| X506 | Driver Door Harness to Driver Door Trim Harness | — | In the driver door, behind the driver door panel | — | — |
| X510 | Driver Door Harness To Outside Rearview Mirror Harness | — | In the driver door, behind the driver door panel, near the A-pillar | *Driver Door Harness Routing* | — |
| X600 | Body Harness To Passenger Door Harness | — | In the passenger compartment, behind the right side of the instrument panel | — | — |
| X605 | Passenger Door Harness to Passenger Door Trim Harness | — | In the passenger door, behind the passenger door panel | *Passenger Door Harness Routing* | — |

| | | | | | |
|---|---|---|---|---|---|
| X606 | Passenger Door Harness to Passenger Door Trim Harness | — | In the passenger door, behind the passenger door panel | — | — |
| X610 | Passenger Door Harness to Outside Rearview Mirror Harness | — | In the passenger door, behind the passenger door panel, near the A-pillar | *Passenger Door Harness Routing* | — |
| X700 | Body Harness To Left Rear Door Harness | — | In the passenger compartment, behind the left B-pillar, near the middle | — | — |
| X800 | Body Harness To Right Rear Door Harness | — | In the passenger compartment, behind the right B-pillar, near the middle | • *Passenger Compartment Right Harness Routing*<br>• *Rear Doors Harness Routing* | — |
| JX101 | CNG Front Harness | LC8 | In the engine compartment, mounted to a bracket that is mounted to the bottom of the battery tray, on the left front of the engine compartment | — | — |
| JX102 | CNG Front Harness | LC8 | In the engine compartment, mounted to a bracket that is mounted to the bottom of the battery tray, on the left front of the engine compartment | — | — |
| JX300 | Body Harness | — | In the passenger compartment, at the base of the right A-pillar behind the trim panel | — | — |

## Front of Vehicle/Engine Compartment Component Views

## Front of Vehicle (Chevrolet) Components

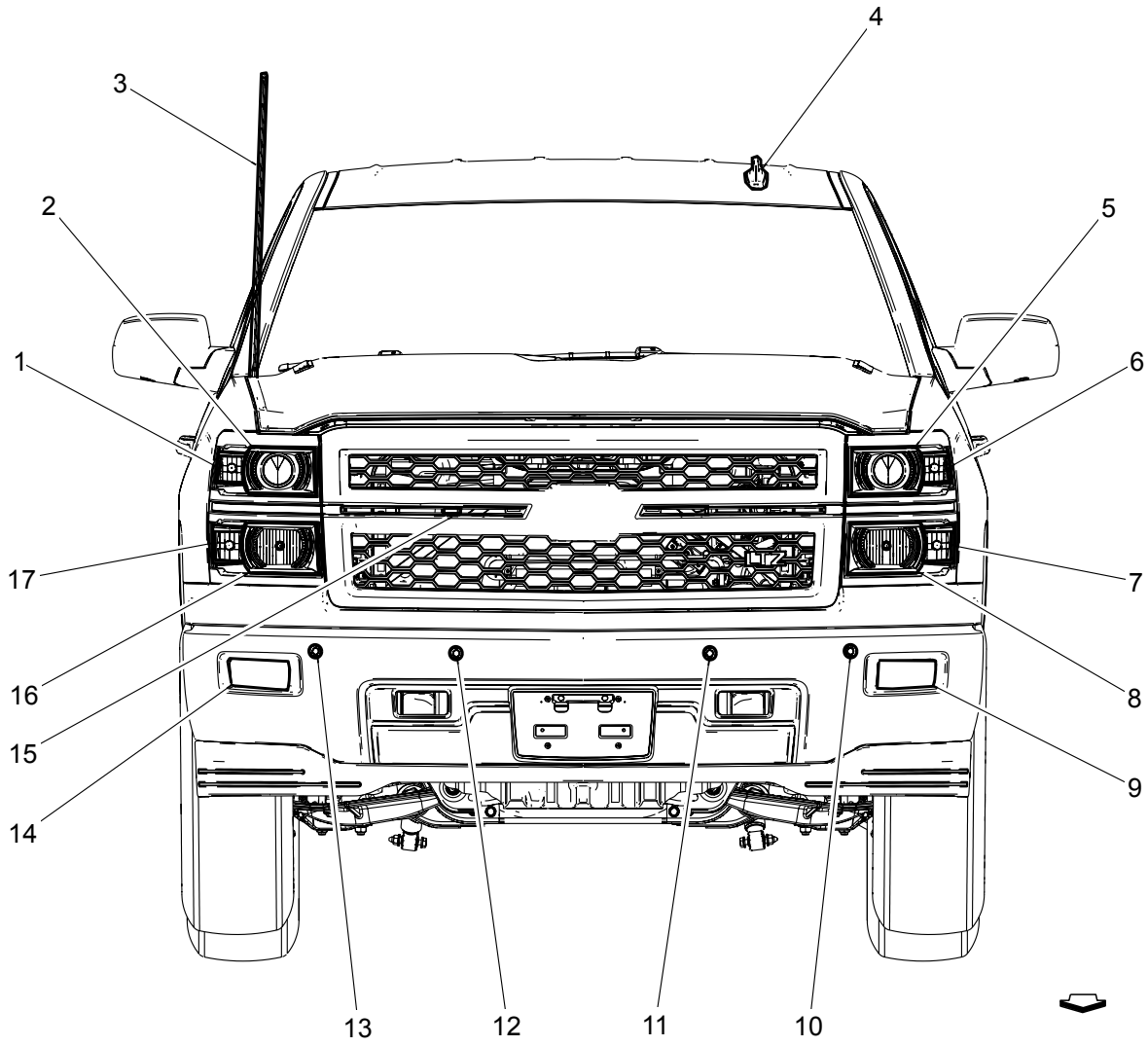


**Items**

1. E4T Park/Turn Signal Lamp - Right Upper (X88)
2. E4H Headlamp - Right Low Beam
3. T4E Cellular Phone and Navigation Antenna
4. T4G Cellular Phone, Navigation, and Digital Radio Antenna
5. E4G Headlamp - Left Low Beam
6. E4S Park/Turn Signal Lamp - Left Upper (X88)
7. E4Q Park/Turn Signal Lamp - Left Lower (X88)
8. E4E Headlamp - Left High Beam (X88)
9. E29LF Fog Lamp - Left Front (T3U)
10. B78A Front Object Sensor - Left Outer (UD5)
11. B78C Front Object Sensor - Left Middle (UD5)

11. B78C Front Object Sensor - Left Middle (UD5)
12. B78D Front Object Sensor - Right Middle (UD5)
13. B78B Front Object Sensor - Right Outer (UD5)
14. E29RF Fog Lamp - Right Front (T3U)
15. B9 Ambient Air Temperature Sensor
16. E4F Headlamp - Right High Beam (X88)
17. E4R Park/Turn Signal Lamp - Right Lower (X88)

## Front of Vehicle (GMC) Components

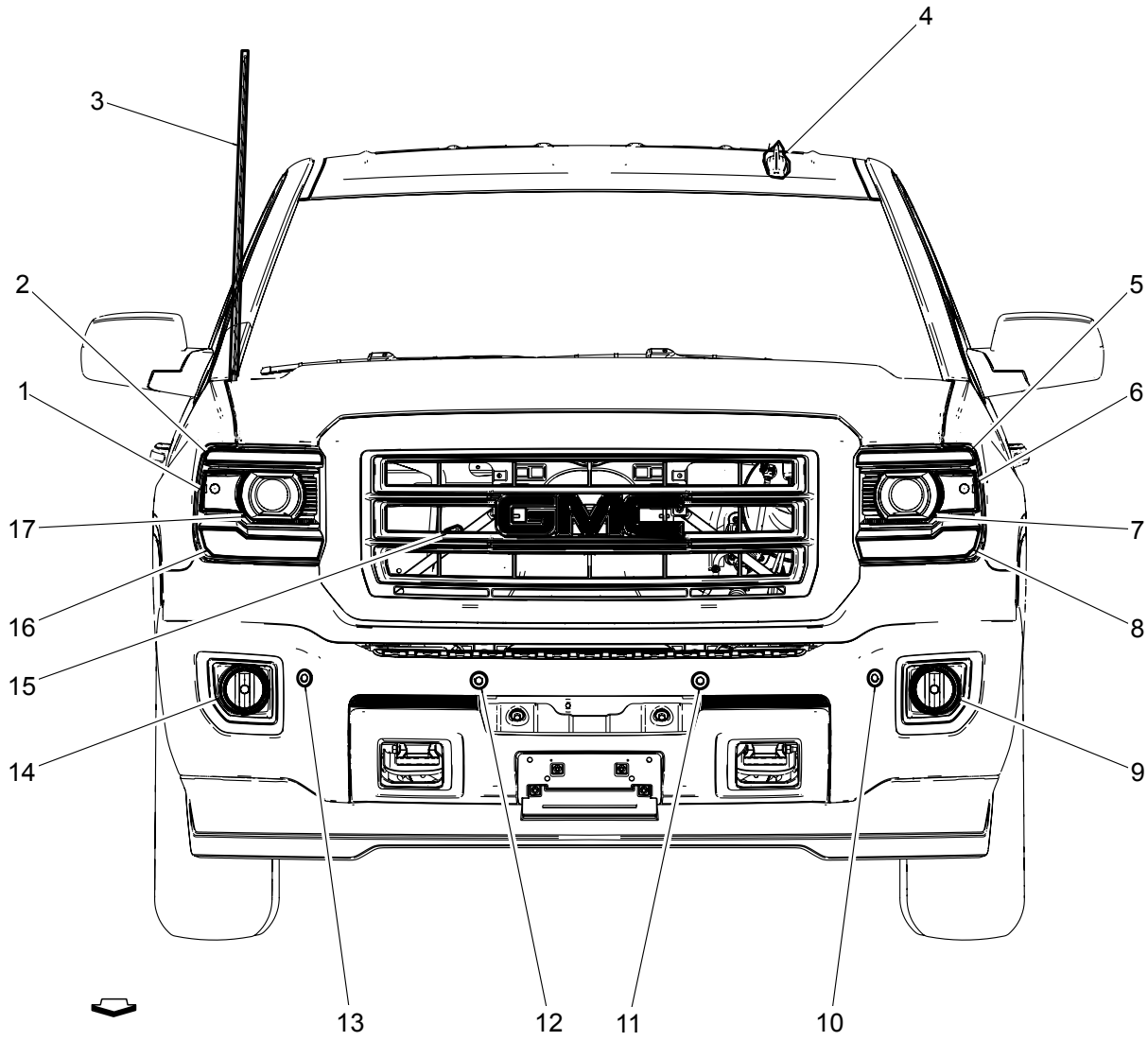


**Items**

1. E4P Park/Turn Signal Lamp - Right (Z88)
2. E4J Park Lamp - Left Front
3. T4E Cellular Phone and Navigation Antenna
4. T4G Cellular Phone, Navigation, and Digital Radio Antenna
5. E4K Park Lamp - Right Front
6. E4G Headlamp - Left Low Beam
7. E4N Park/Turn Signal Lamp - Left (Z88)
8. E4D Daytime Running Lamp - Right (Y91)
9. E29LF Fog Lamp - Left Front (T3U)
10. B78A Front Object Sensor - Left Outer (UD5)
11. B78C Front Object Sensor - Left Middle (UD5)

11. B78C Front Object Sensor - Left Middle (UD5)
12. B78D Front Object Sensor - Right Middle (UD5)
13. B78A Front Object Sensor - Left Outer (UD5)
14. E29RF Fog Lamp - Right Front (T3U)
15. B9 Ambient Air Temperature Sensor
16. E4C Daytime Running Lamp - Left (Y91)
17. E4H Headlamp - Right Low Beam

## Left Side of Engine Compartment Components

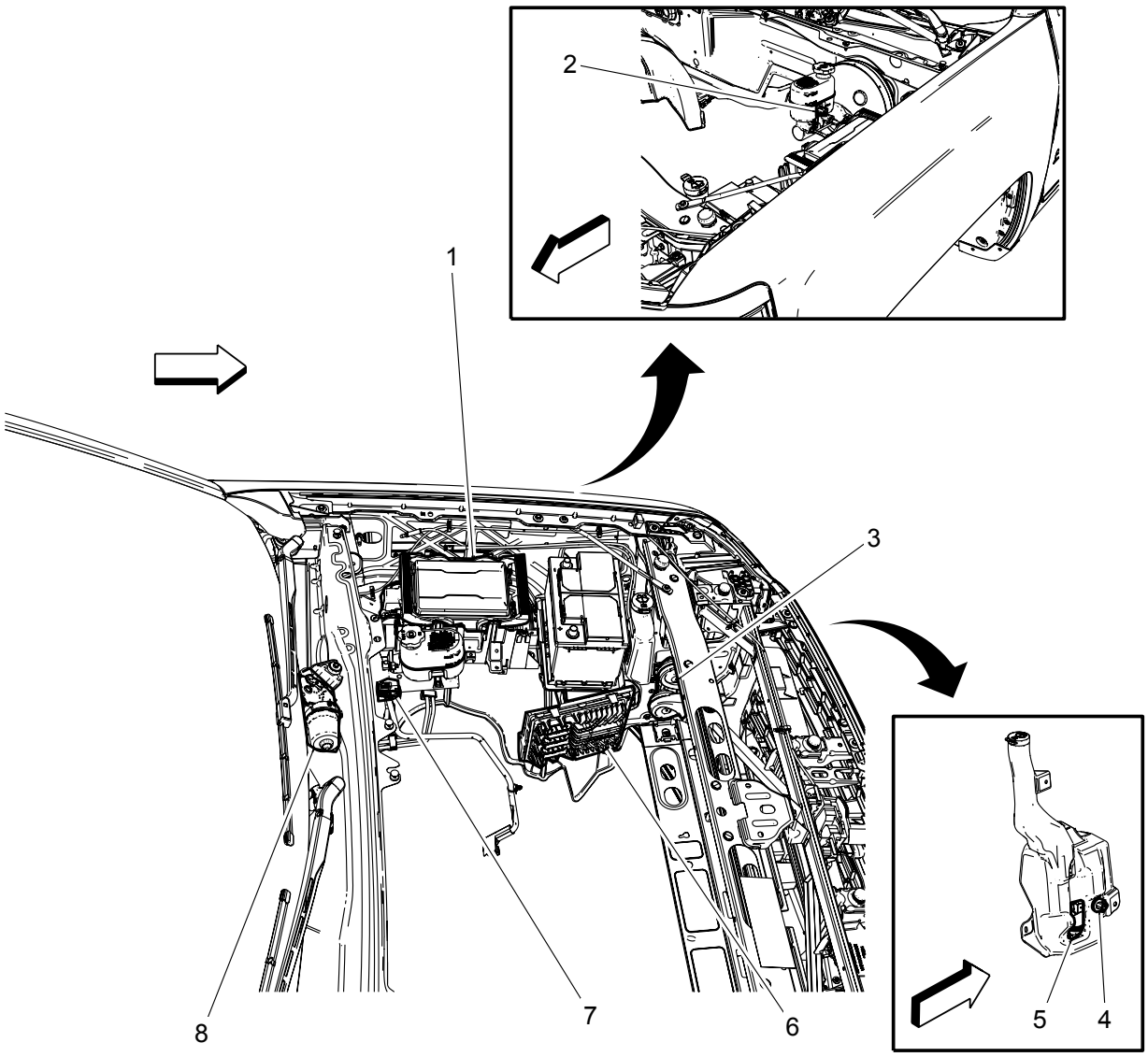


**Items**

1. X50A Fuse Block - Underhood
2. B20 Brake Fluid Level Switch
3. P12 Horn
4. B118B Windshield Washer Fluid Level Switch
5. G24 Windshield Washer Pump
6. K20 Engine Control Module
7. B19B Brake Booster Vacuum Sensor
8. M75 Windshield Wiper Motor

## Right Side of Engine Compartment Components

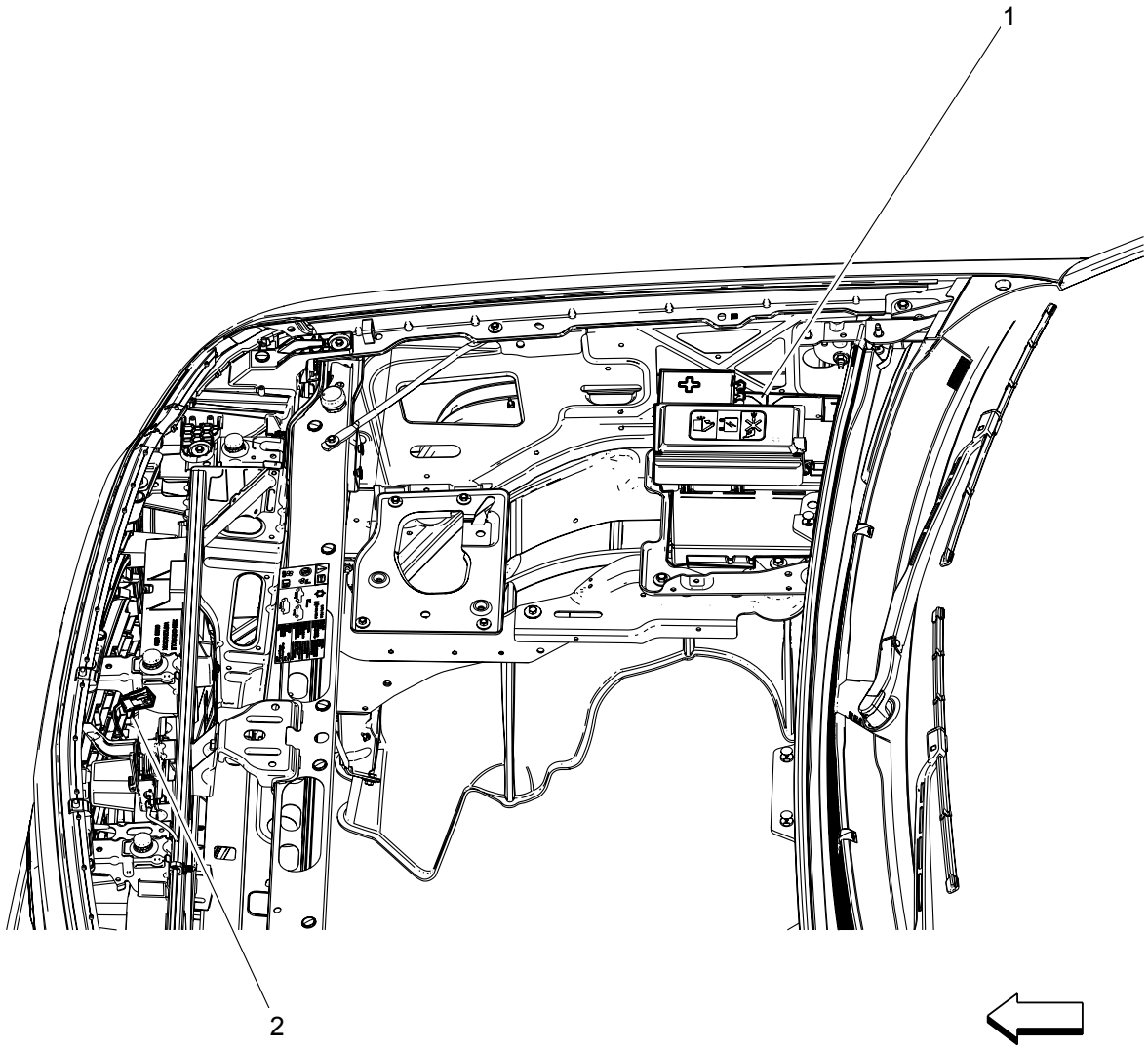


**Items**

1. C1 Battery
2. B55 Hood Ajar Switch

## Left Side of Engine Components (LML)

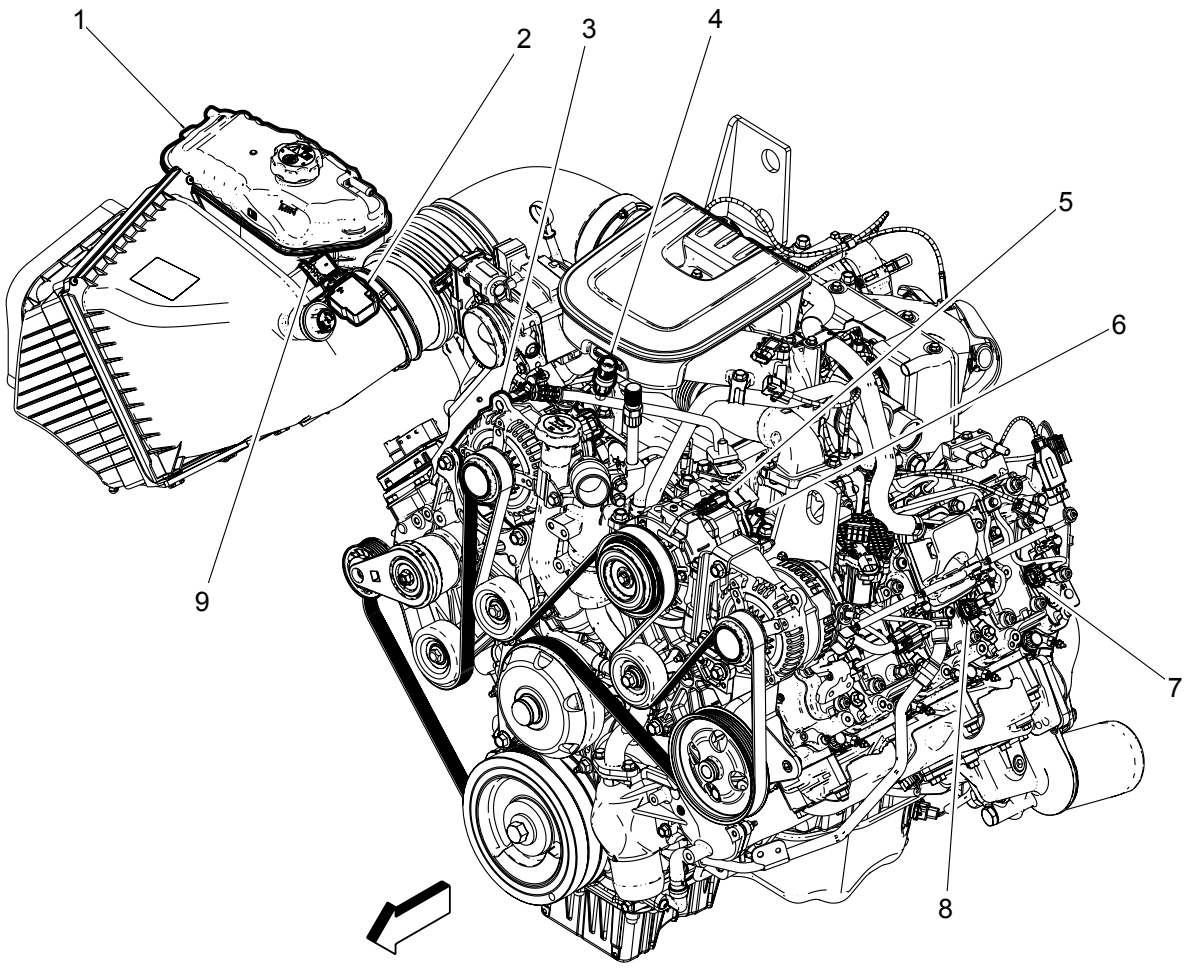


**Items**

1. B33 Engine Coolant Level Switch
2. B75B Mass Air Flow/Intake Air Temperature Sensor
3. G13E Generator - Auxiliary
4. B1 A/C Refrigerant Pressure Sensor
5. Q2 A/C Compressor Clutch
6. Q46 A/C Compressor Solenoid Valve
7. Q17G Fuel Injector 7  (L83 or L86)
8. Q17E Fuel Injector 5
9. B75C Multifunction Intake Air Sensor

## Left Side of Engine Components (L96)

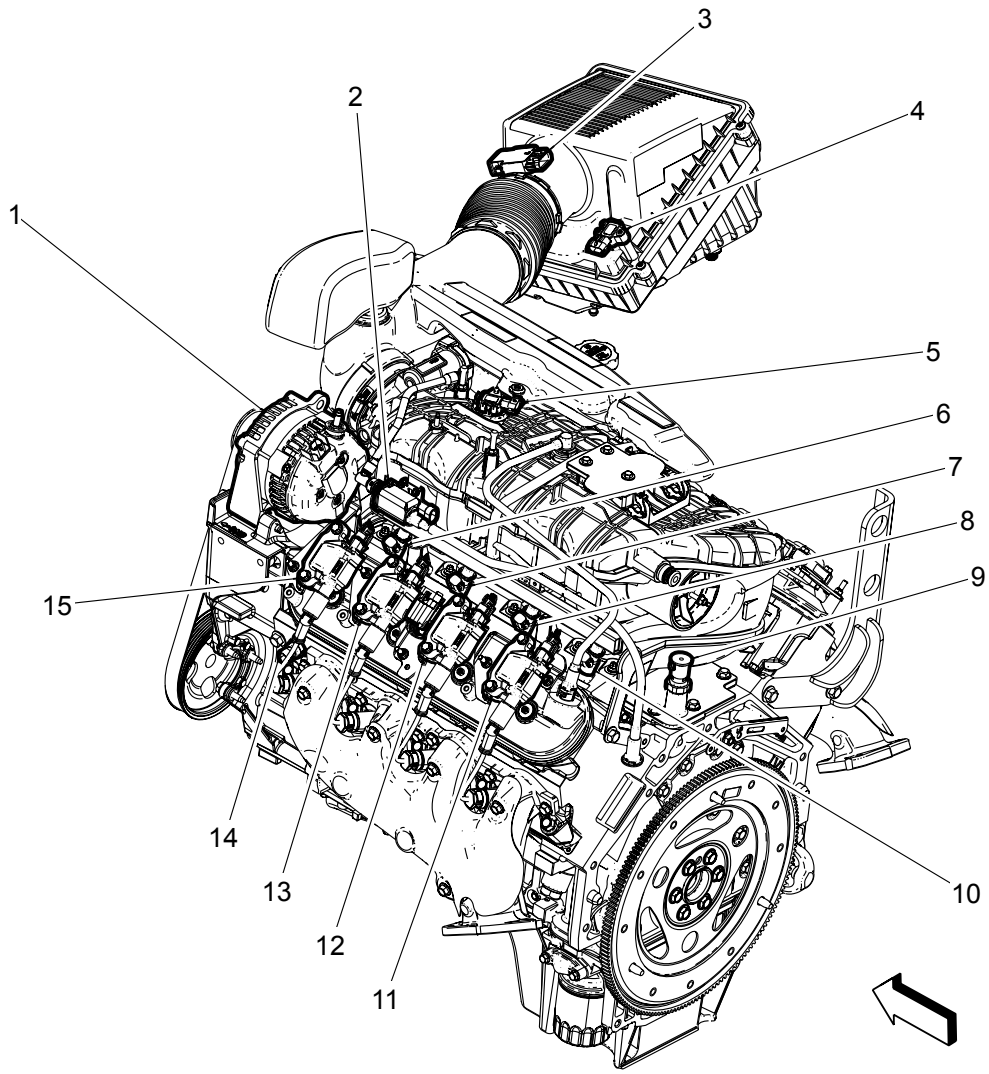


**Items**

1. G13 Generator
2. Q12 Evaporative Emission Purge Solenoid Valve
3. B75B Mass Air Flow/Intake Air Temperature Sensor
4. B192 Throttle Inlet Absolute Pressure Sensor
5. B74 Manifold Absolute Pressure Sensor
6. Q17A Fuel Injector 1
7. Q17C Fuel Injector 3
8. Q17E Fuel Injector 5
9. B37B Engine Oil Pressure Sensor
10. Q17G Fuel Injector 7 (L83 or L86)
11. T8G Ignition Coil 7 (L83 or L86)

11. T8G Ignition Coil 7  (L83 or L86)
12. T8E Ignition Coil 5
13. T8C Ignition Coil 3
14. B34 Engine Coolant Temperature Sensor
15. T8A Ignition Coil 1

## Right Side of Engine Components (L96)

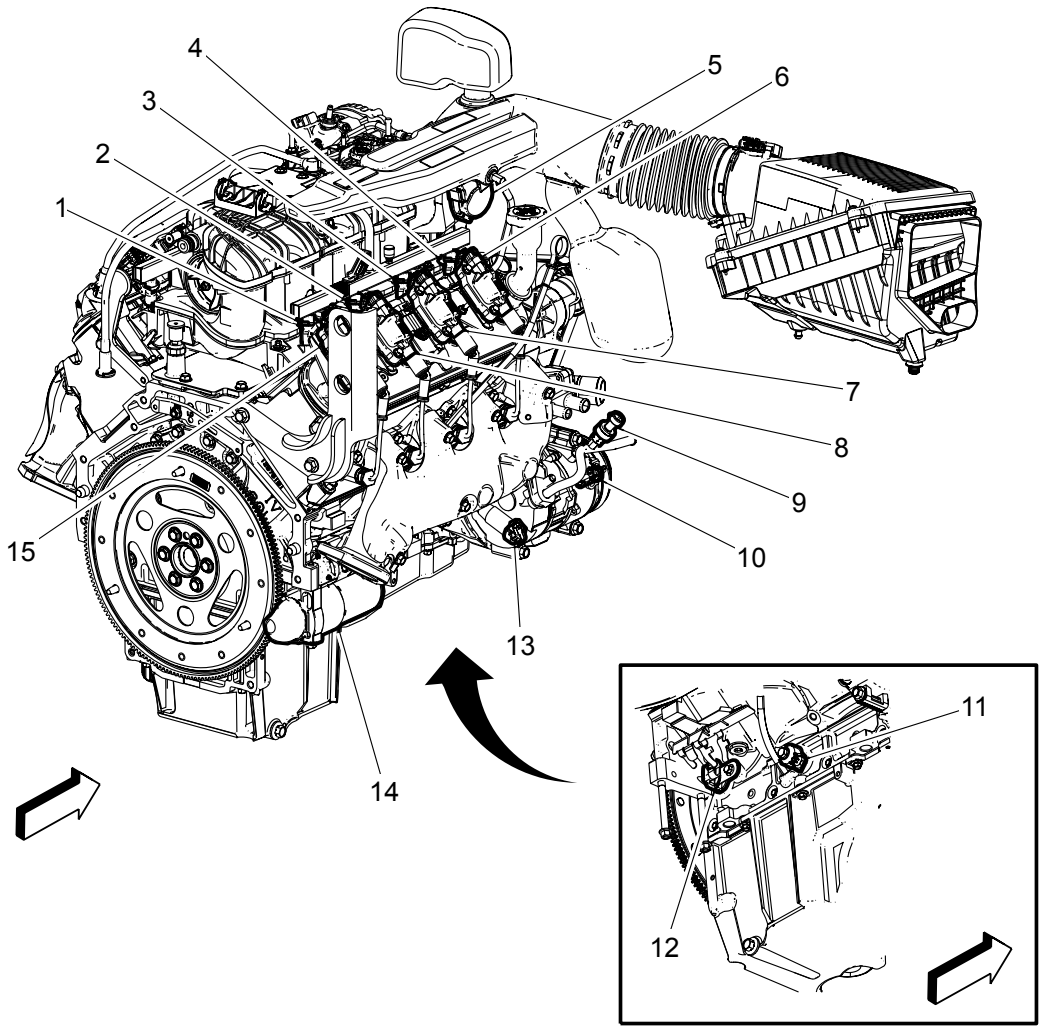


**Items**

1. Q17H Fuel Injector 8 (L83 or L86)
2. Q17F Fuel Injector 6
3. Q17D Fuel Injector 4
4. Q17B Fuel Injector 2
5. Q38 Throttle Body
6. T8B Ignition Coil 2
7. T8D Ignition Coil 4
8. T8F Ignition Coil 6
9. B1 A/C Refrigerant Pressure Sensor
10. Q2 A/C Compressor Clutch
11. B68B Knock Sensor 2

11. B68B Knock Sensor 2

12. B26 Crankshaft Position Sensor

13. Q46 A/C Compressor Solenoid Valve

14. M64 Starter Motor

15. T8H Ignition Coil 8  (L83 or L86)

## Instrument Panel/Center Console Component Views

## Front of Instrument Panel Components

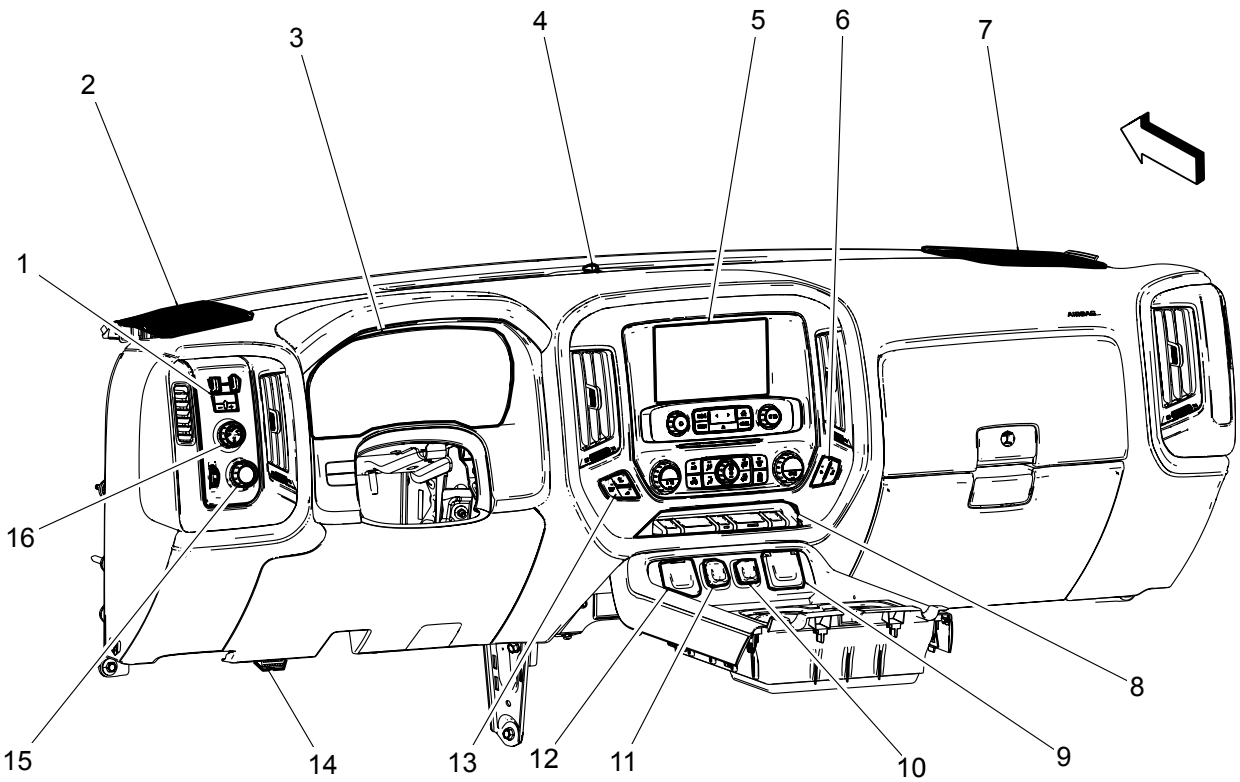


**Items**

1. S76 Trailer Brake Control Switch
2. P19J Speaker - Left Instrument Panel (UQ3)
3. P16 Instrument Cluster
4. B10B Ambient Light/Sunload Sensor
5. P17 Info Display Module
6. S31P Seat Heating and Cooling Switch - Passenger
7. P19W Speaker - Right Instrument Panel (UQ3)
8. S48A Multifunction Switch - Instrument Panel
9. X81 Accessory Power Receptacle - 110V AC (KI4)
10. X80K Accessory Power Receptacle - Instrument Panel 2
11. X80J Accessory Power Receptacle - Instrument Panel 1
12. X92 USB Receptacle
13. S31D Seat Heating and Cooling Switch - Driver
14. X84 Data Link Connector
15. S30 Headlamp Switch

15. S30 Headlamp Switch

16. S77 Transfer Case Shift Control Switch

## Rear of Instrument Panel Components

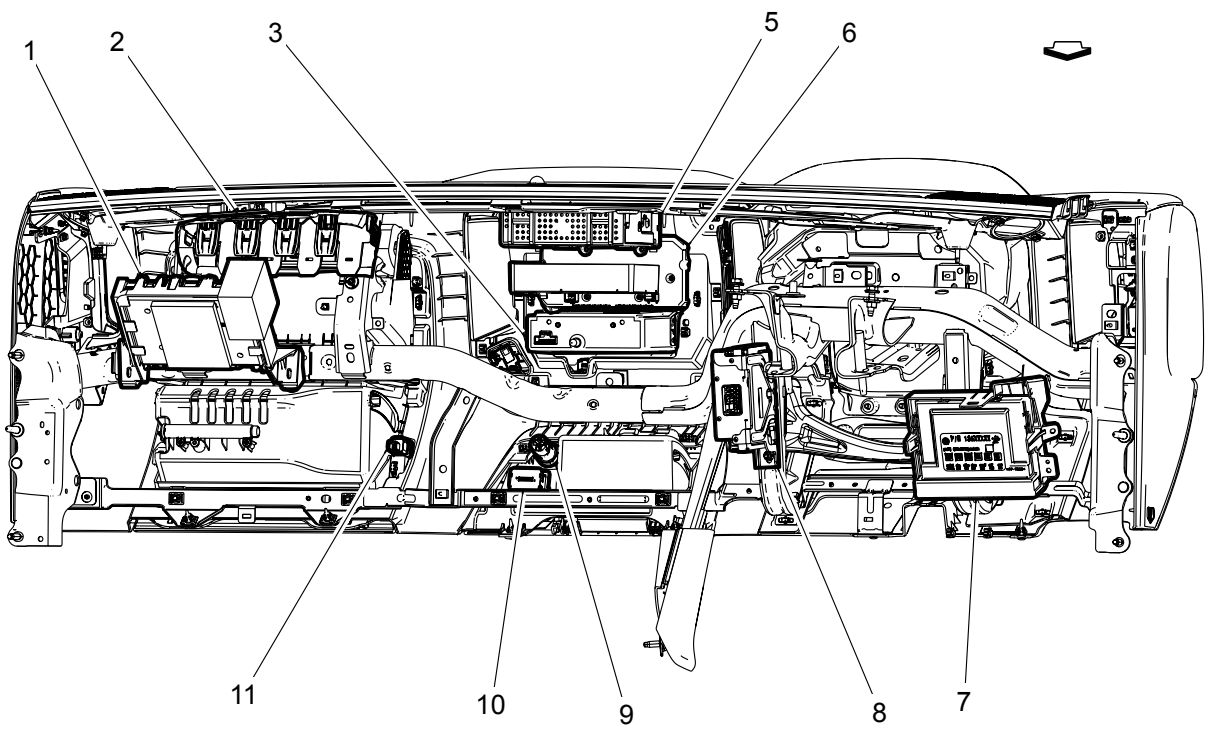


**Items**

1. K74 Human Machine Interface Control Module
2. F101 Passenger Instrument Panel Air Bag
3. A33 Media Disc Player
5. A11 Radio
6. K73 Telematics Communication Interface Control Module
7. K9 Body Control Module
8. T1 Accessory DC/AC Power Inverter Module (KI4)
9. X80J Accessory Power Receptacle - Instrument Panel 1
10. X81 Accessory Power Receptacle - 110V AC (KI4)
11. S135 Rollover Protection Disable Switch

## Roof Rail Air Bags

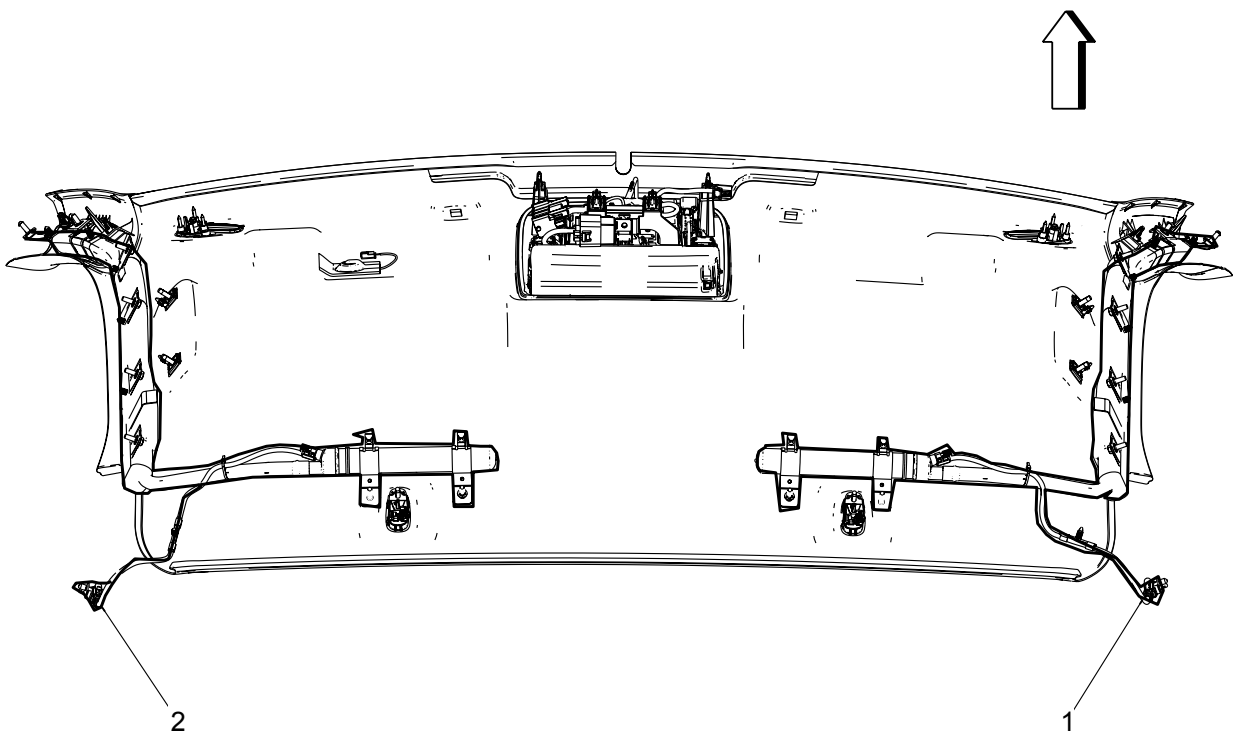


**Items**

1. F105R Roof Rail Air Bag - Right
2. F105L Roof Rail Air Bag - Left

## Headliner Components

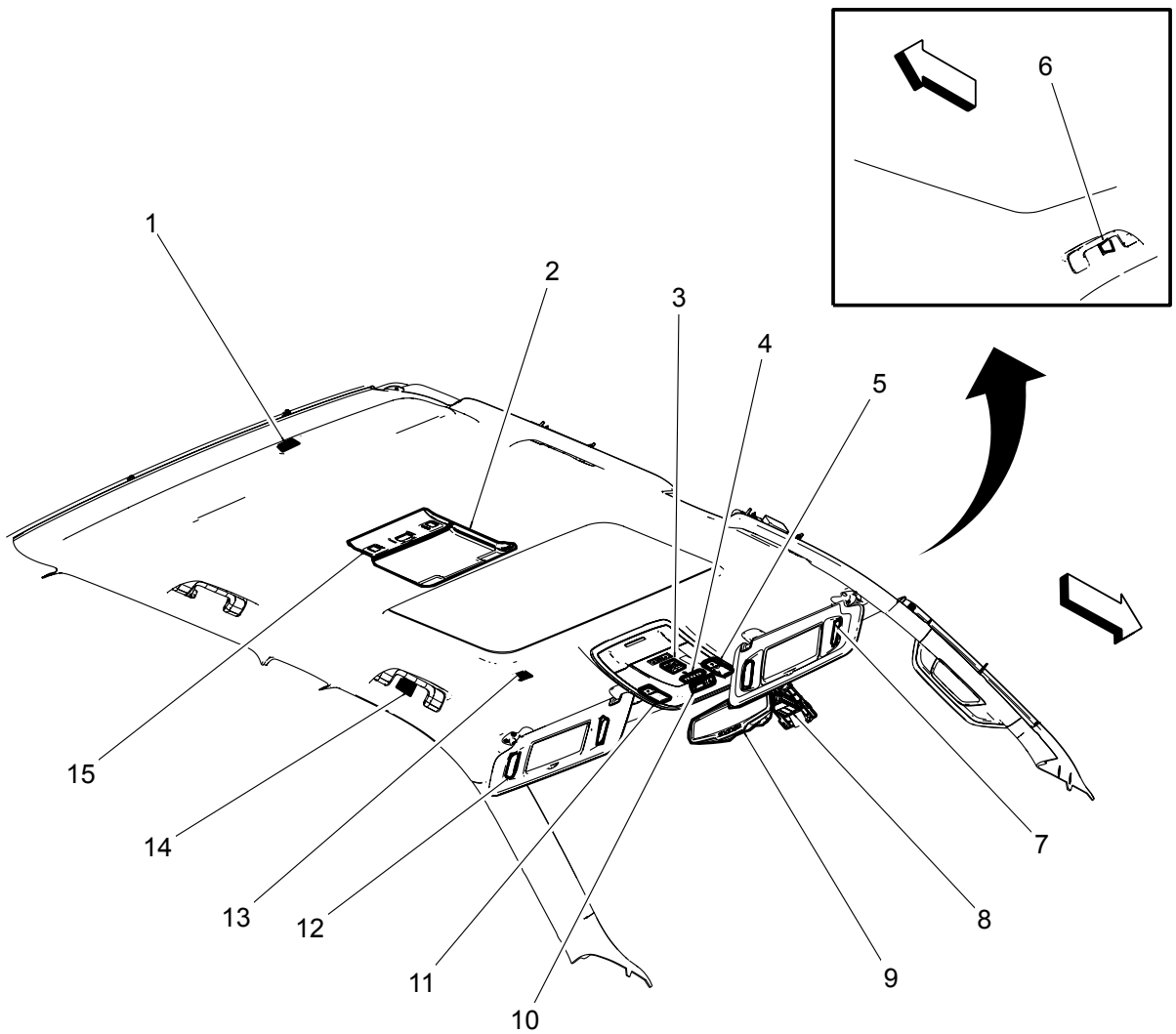


**Items**

1. B77R Radio Volume Compensator Interior Noise Microphone - Rear (NKC)
2. P22A Video Display - 2nd Row (U42)
3. S72 Sunroof Switch (CF5)
4. S25 Garage Door Opener
5. E37ER Dome/Reading Lamps - Front Overhead Console Right
6. B77RF Radio Volume Compensator Interior Noise Microphone - Right Front (NKC)
7. E31R Sunshade Mirror Lamp - Right
8. K109 Frontview Camera Module (Y65)
9. A10 Inside Rearview Mirror

10. P14 Passenger Air Bag Disabled Indicator

11. E37EL Dome/Reading Lamps - Front Overhead Console Left

12. E31L Sunshade Mirror Lamp - Left

13. B24 Cellular Phone Microphone

14. B77LF Radio Volume Compensator Interior Noise Microphone - Left Front (NKC)

15. E37B Dome/Reading Lamps - 2nd Row

## Door Component Views

### Driver Door Components

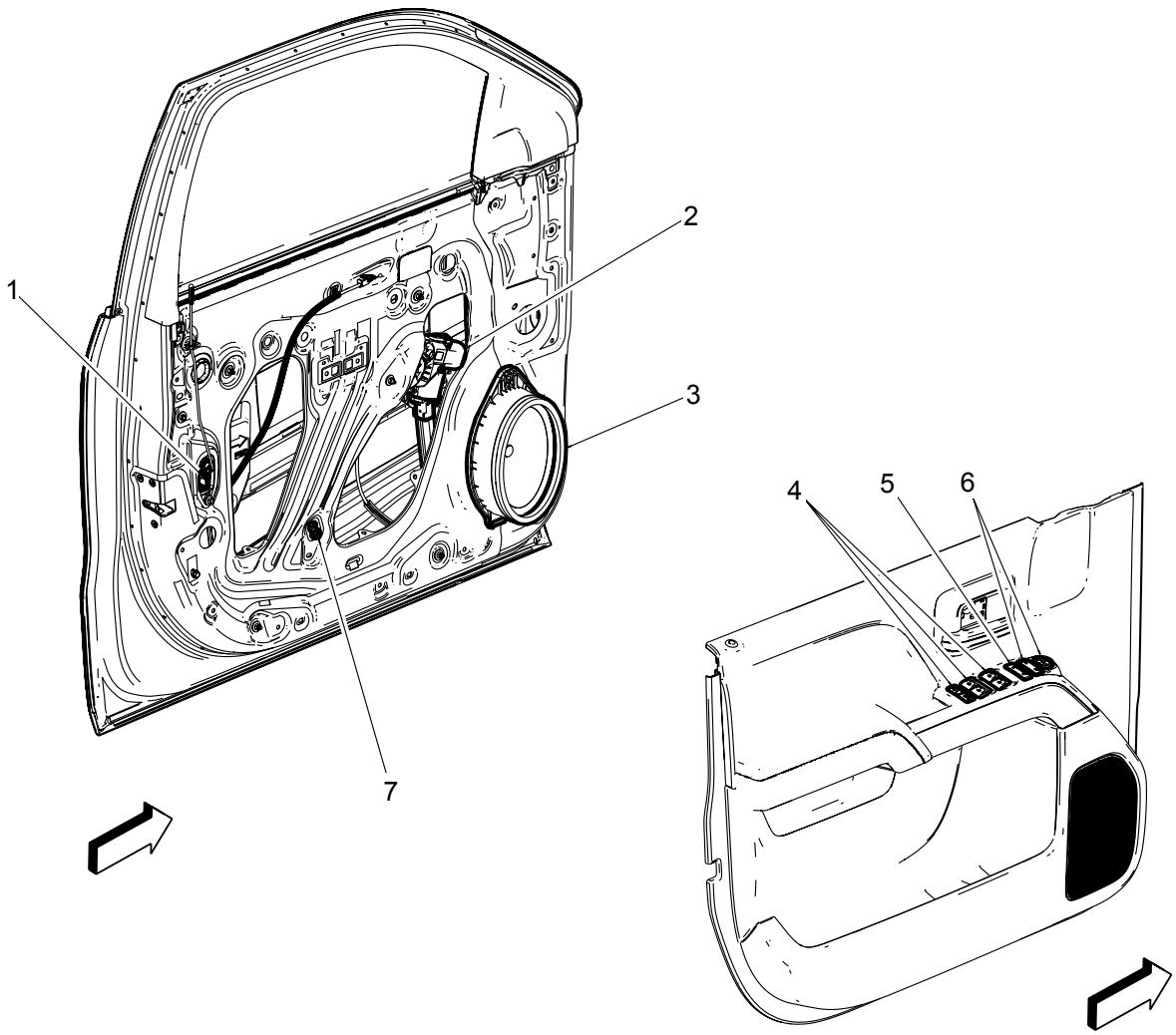


**Items**

1. A23D Door Latch Assembly - Driver
2. M74D Window Motor - Driver
3. P19AG Speaker - Left Front Door
4. S79D Window Switch - Driver
5. S13D Door Lock Switch - Driver
6. S52 Outside Rearview Mirror Switch
7. B63LF Side Impact Sensor - Left Front

## Passenger Door Components

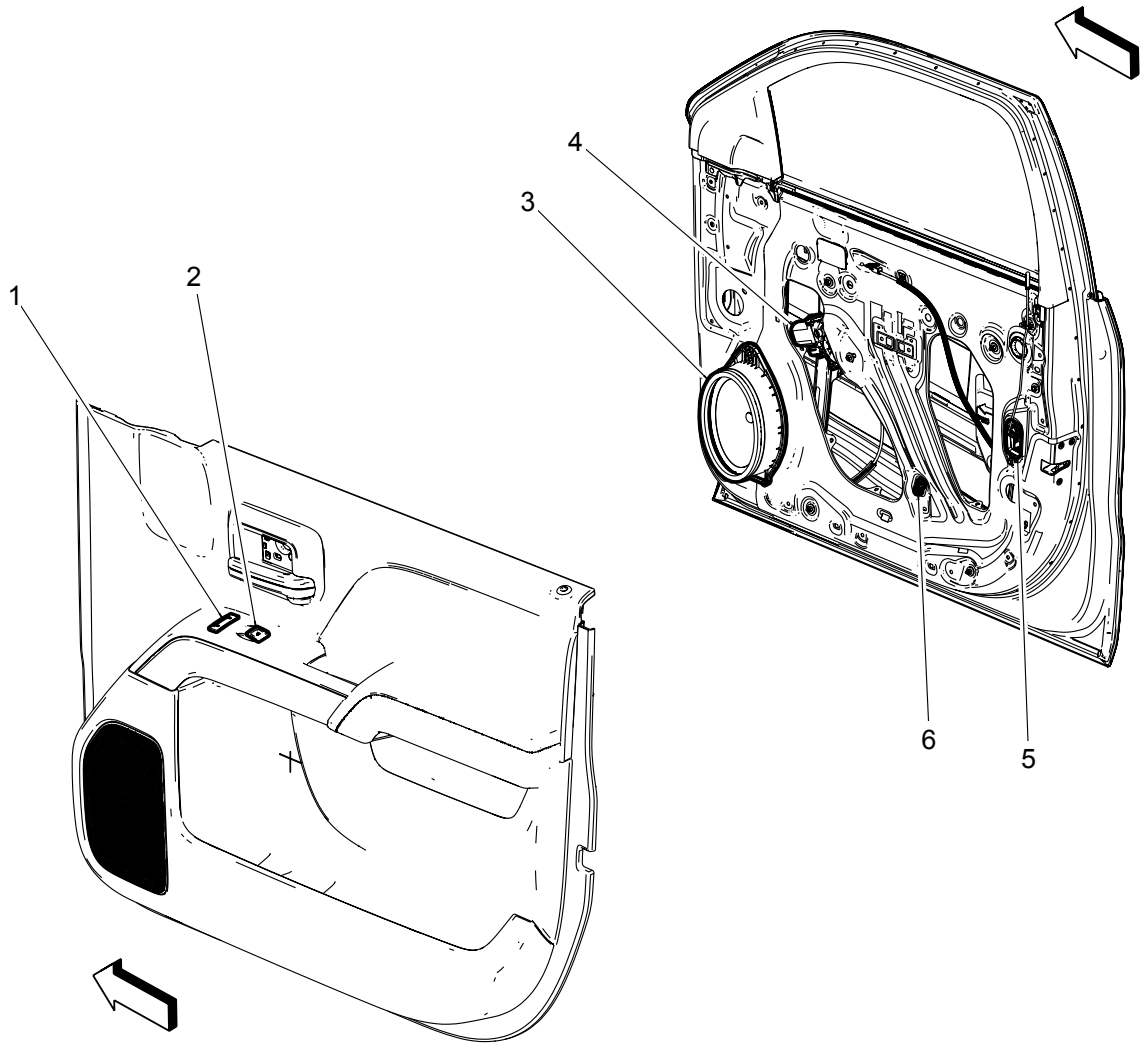


**Items**

1. S13P Door Lock Switch - Passenger
2. S79P Window Switch - Passenger
3. P19AH Speaker - Right Front Door
4. M74P Window Motor - Passenger
5. A23P Door Latch Assembly - Passenger
6. B63RF Side Impact Sensor - Right Front

## Left Rear Door Components

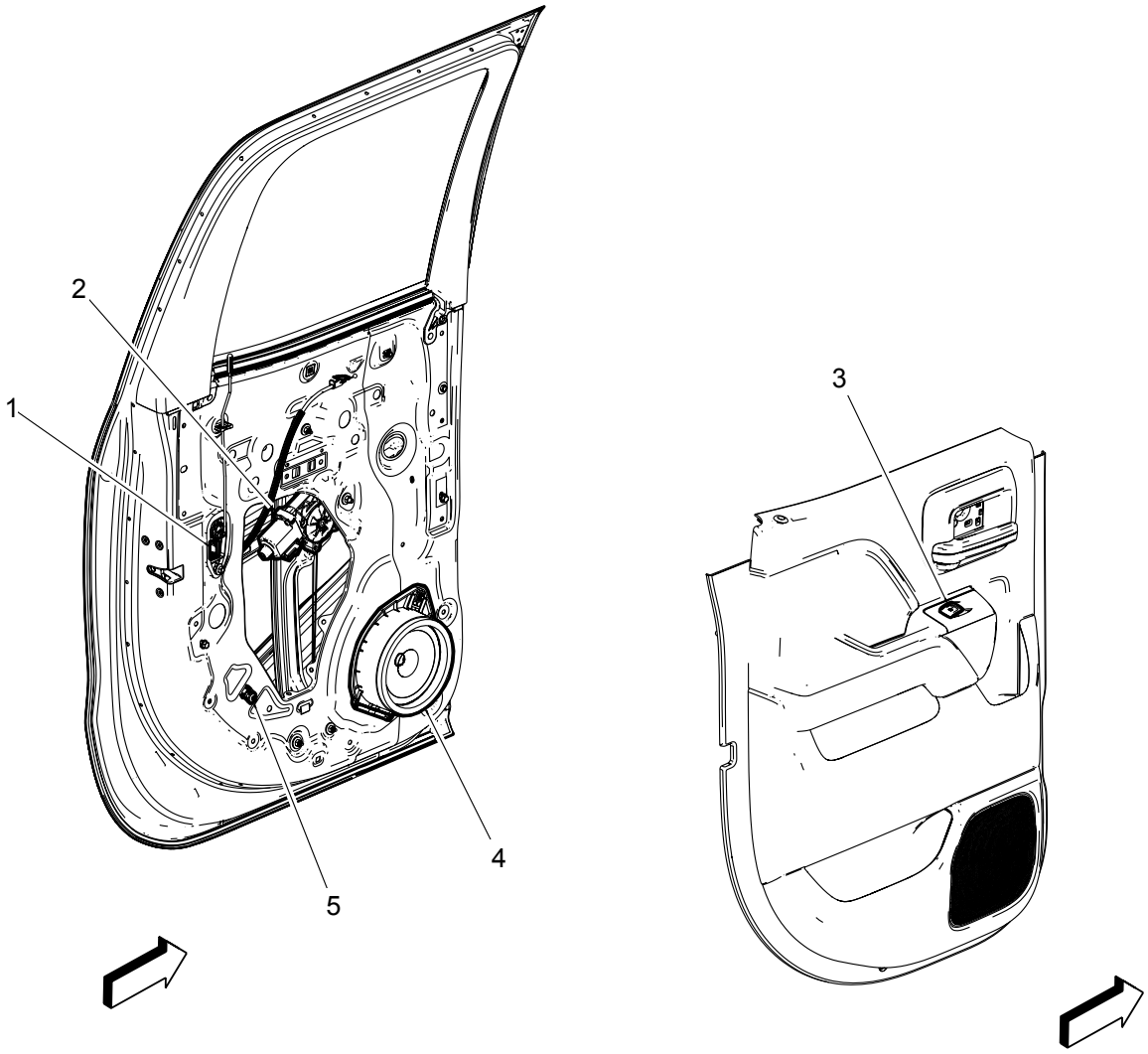


**Items**

1. A23LR Door Latch Assembly - Left Rear
2. M74LR Window Motor - Left Rear (except Regular Cab)
3. S79LR Window Switch - Left Rear
4. P19AL Speaker - Left Rear Door (except Regular Cab)
5. B63LR Side Impact Sensor - Left Rear

## Right Rear Door Components

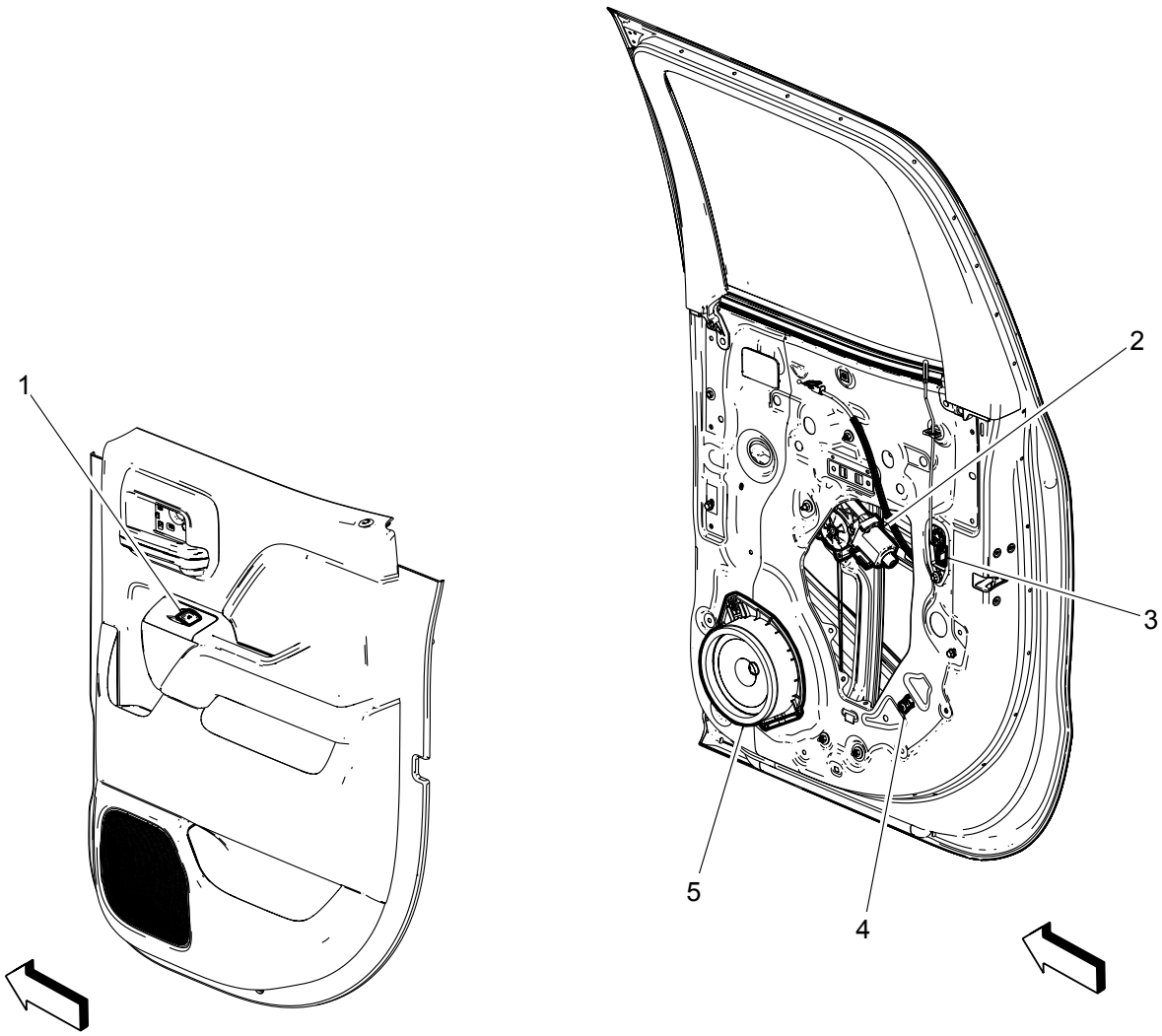


**Items**

1. S79RR Window Switch - Right Rear
2. M74RR Window Motor - Right Rear  (except Regular Cab)
3. A23RR Door Latch Assembly - Right Rear
4. B63RR Side Impact Sensor - Right Rear
5. P19AM Speaker - Right Rear Door  (except Regular Cab)

## Luggage Compartment/Rear of Vehicle Component Views

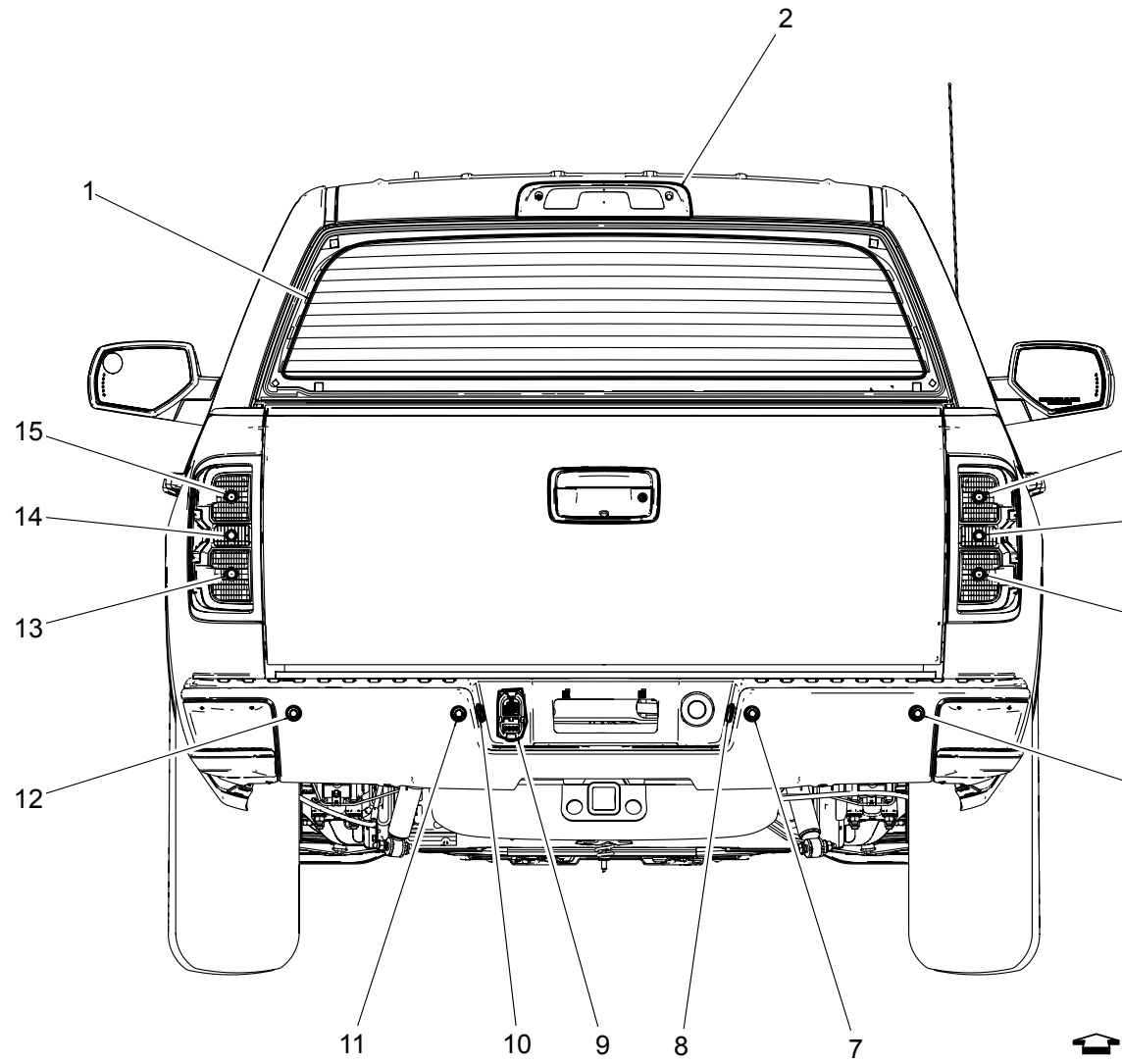


**Items**

1. E18 Rear Defogger Grid
2. E6 Center High Mounted Stop Lamp
3. E5AH Tail/Stop and Turn Signal Lamp - Right Upper
4. E5B Backup Lamp - Right
5. E5V Tail/Stop and Turn Signal Lamp - Right Lower
6. B78H Rear Object Sensor - Right Outer (UD7)
7. B78F Rear Object Sensor - Right Middle (UD7)
8. E7R License Plate Lamp - Right
9. X88 Trailer Connector
10. E7L License Plate Lamp - Left
11. B78E Rear Object Sensor - Left Middle (UD7)

11. B78E Rear Object Sensor - Left Middle (UD7)
12. B78G Rear Object Sensor - Left Outer (UD7)
13. E5U Tail/Stop and Turn Signal Lamp - Left Lower
14. E5A Backup Lamp - Left
15. E5AG Tail/Stop and Turn Signal Lamp - Left Upper

## G101

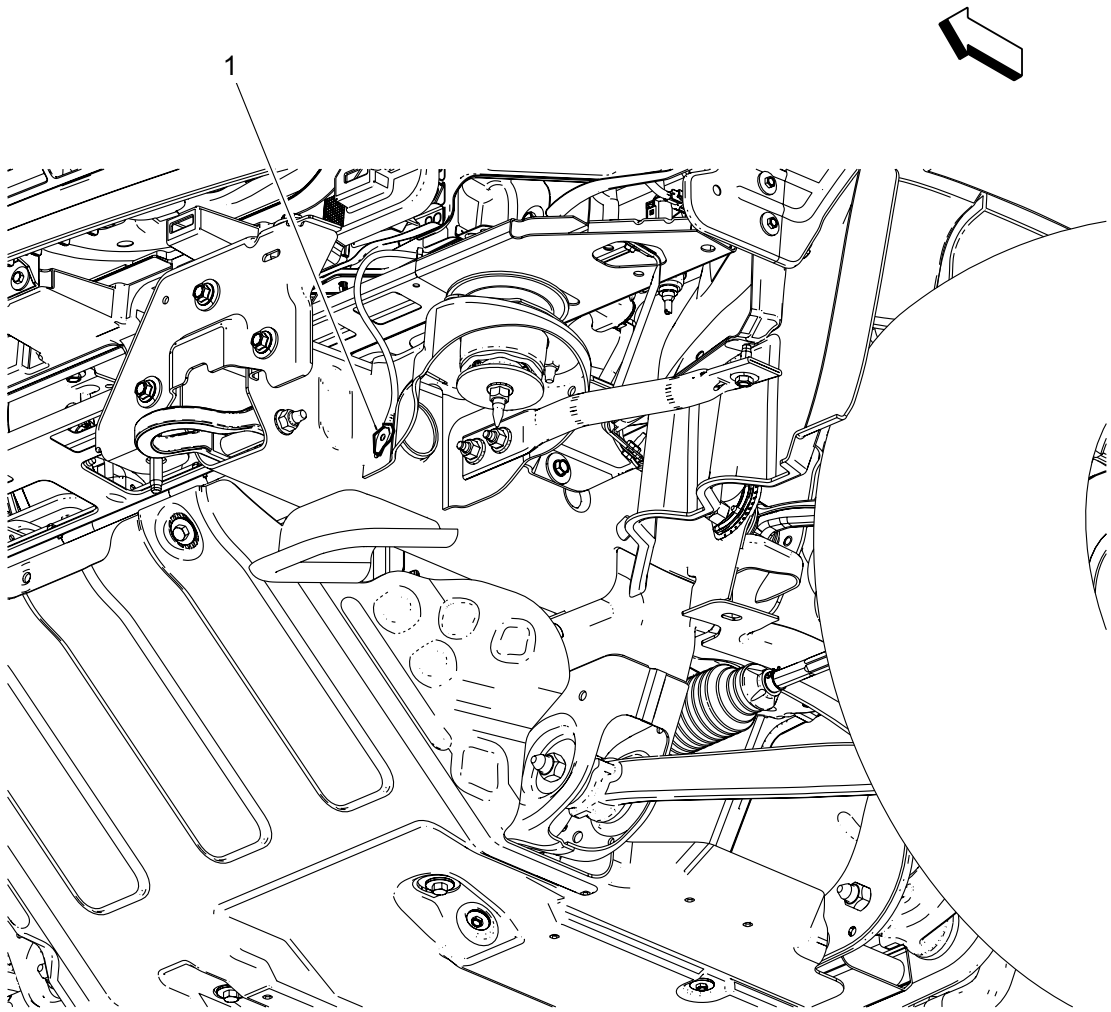


**Items**

1. G101

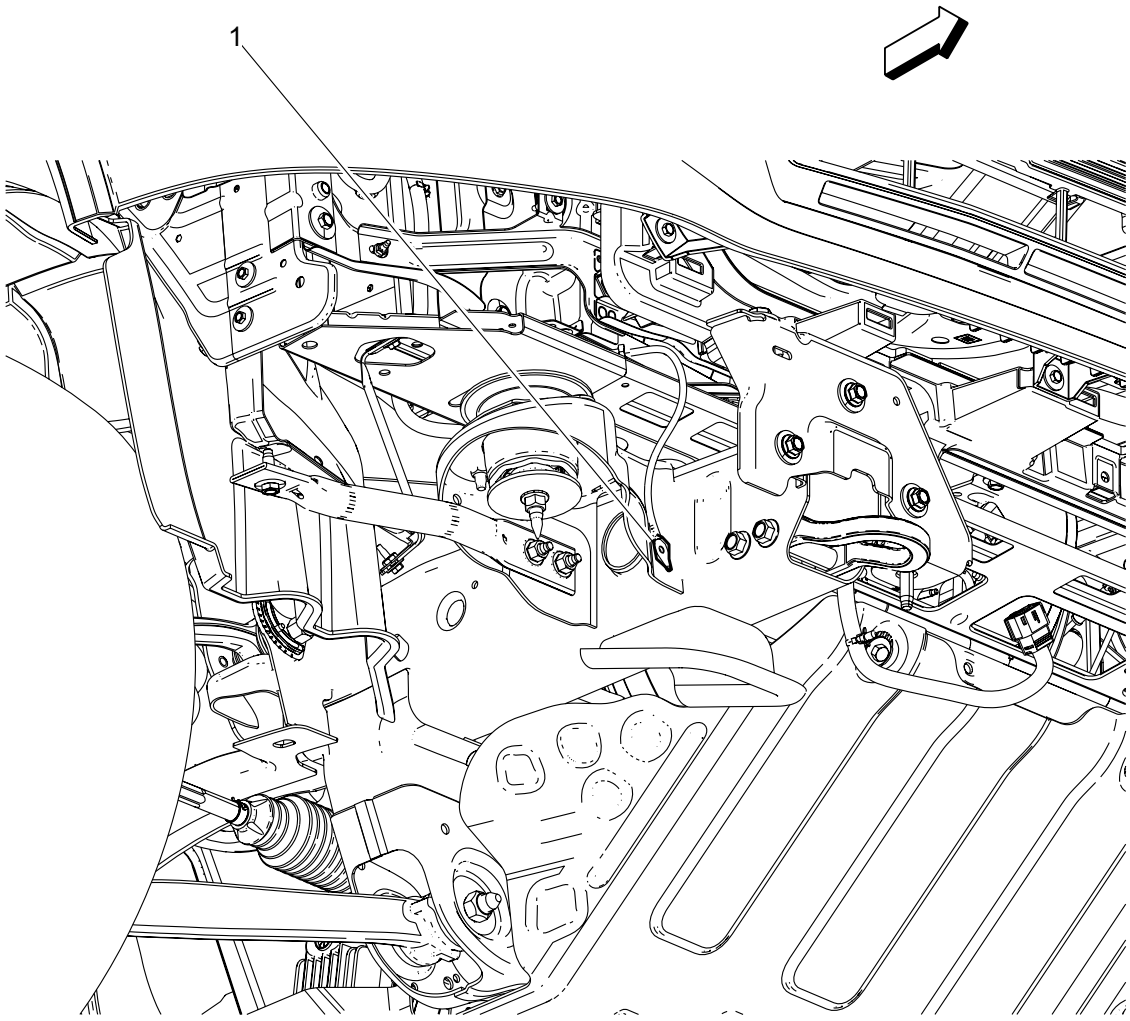


**Items**

1. G102

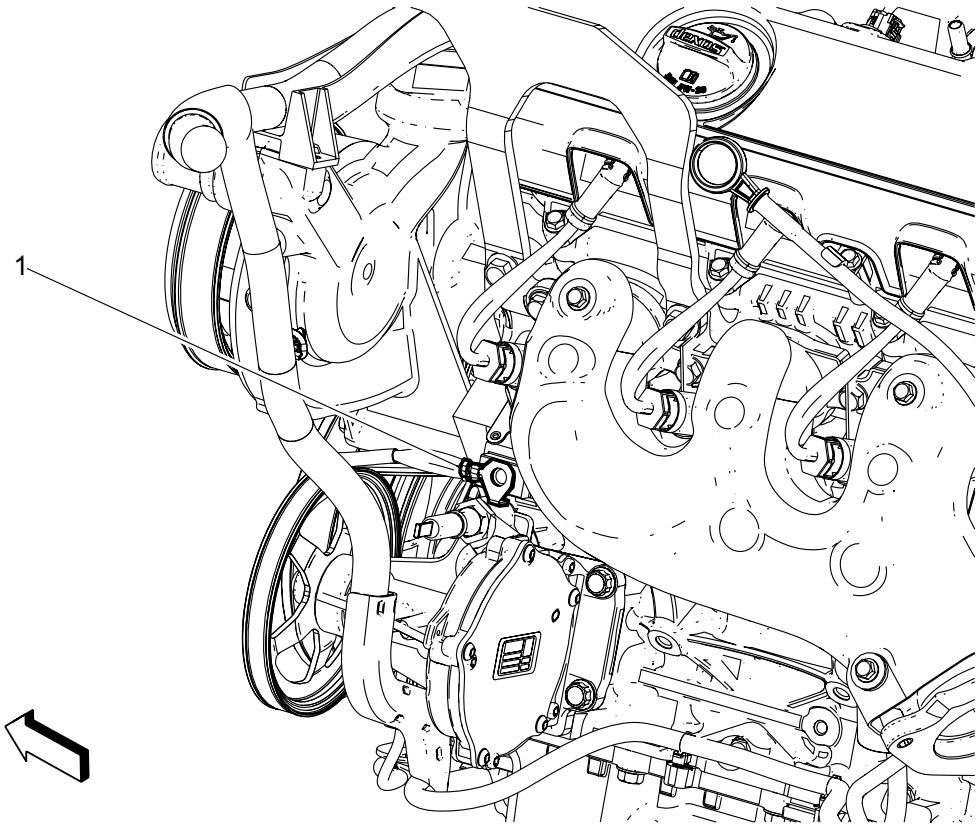


**Items**

1. G110

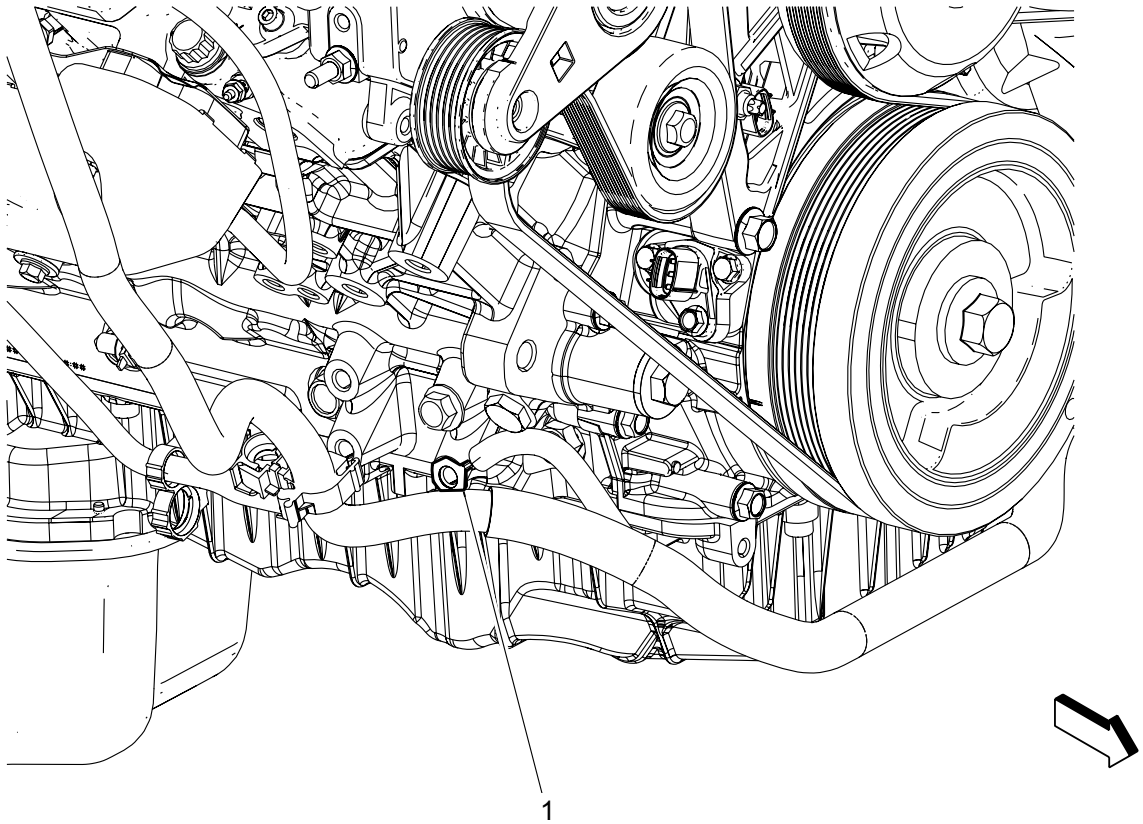


**Items**

1. G120

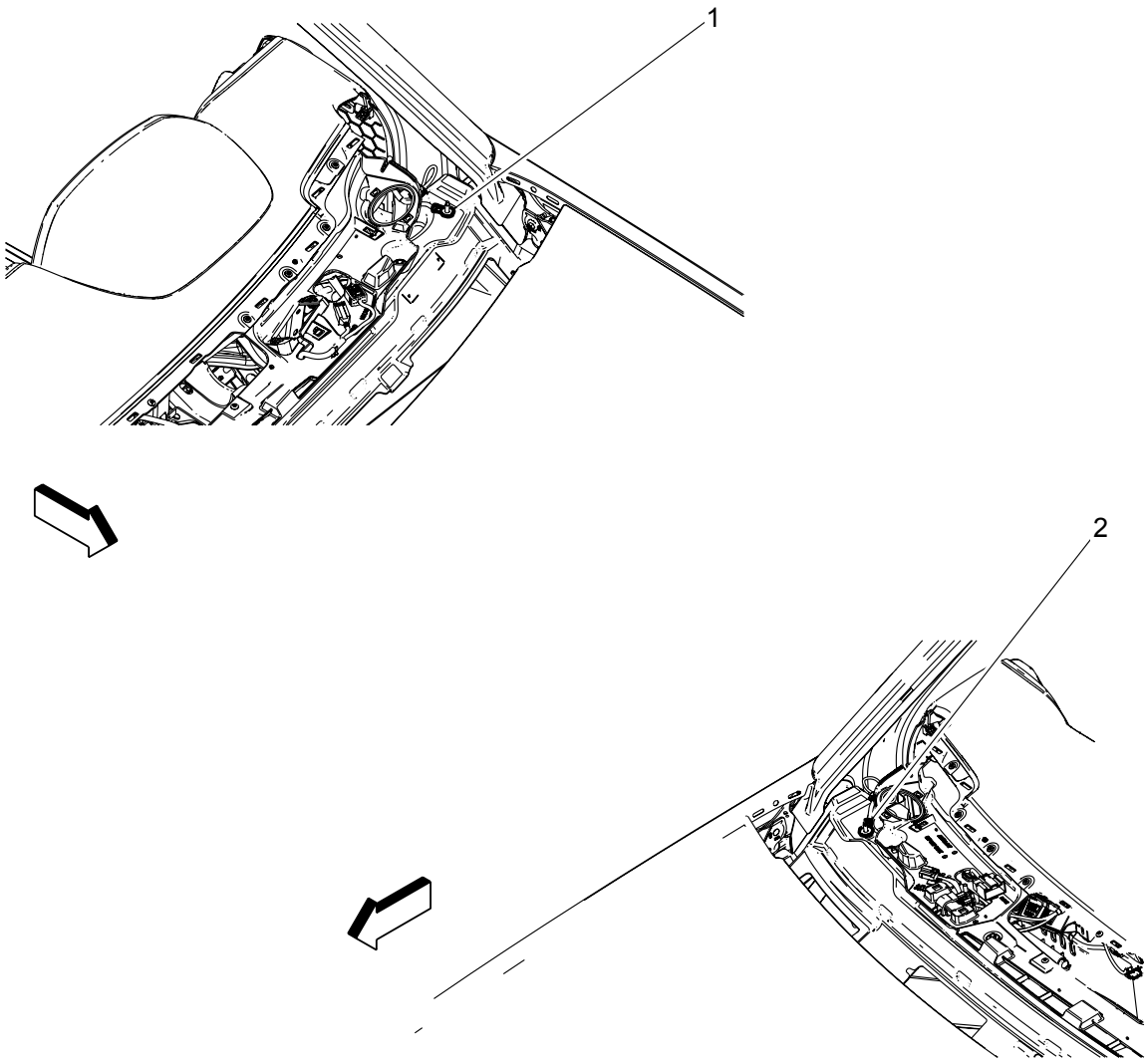


**Items**

1. G218
2. G210

## G311 and G325

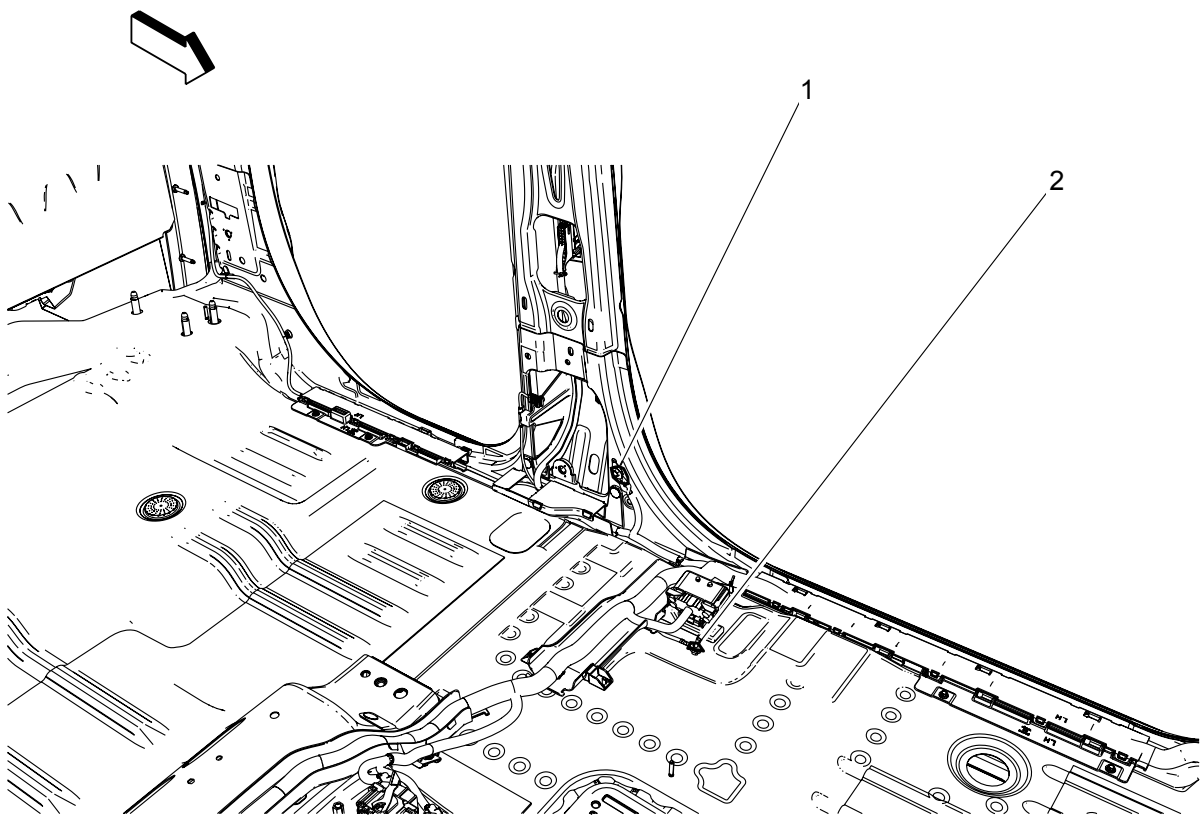


**Items**

1. G311
2. G325

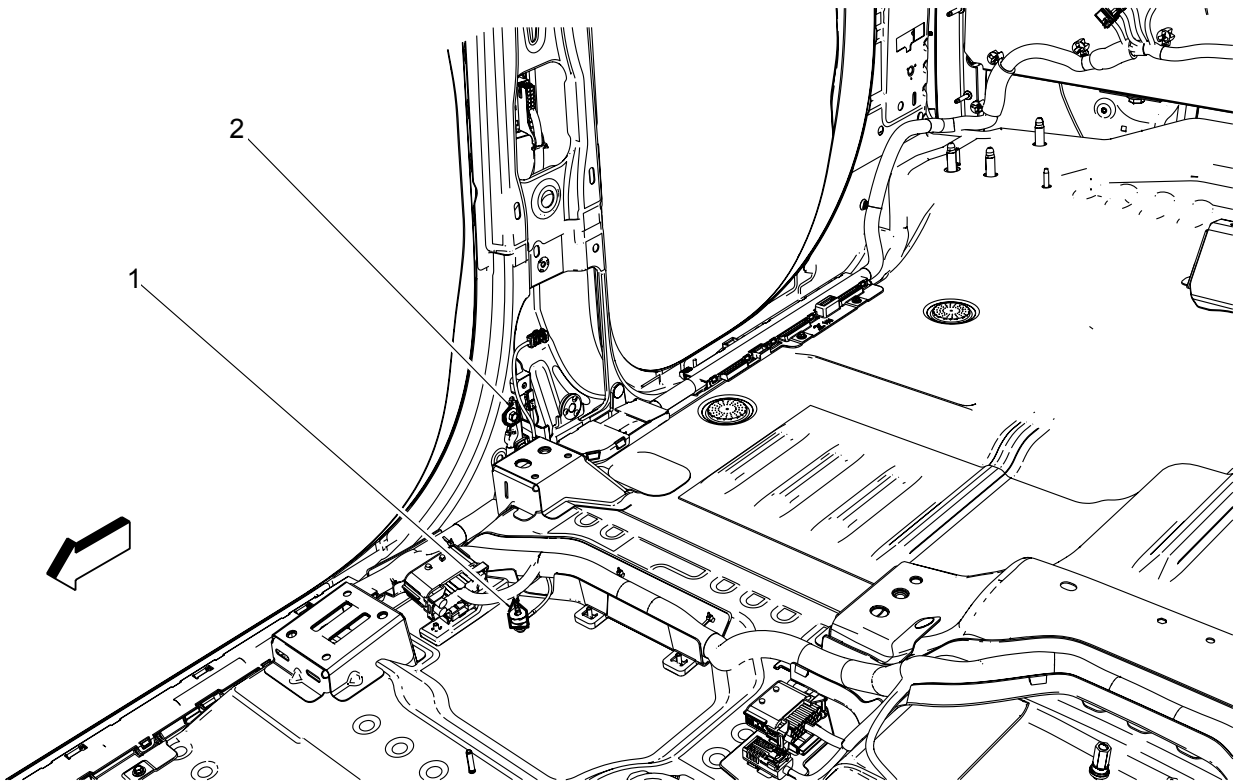


**Items**

1. G327
2. G312

## Electrical Center Identification Views

## X50A Fuse Block - Underhood X1

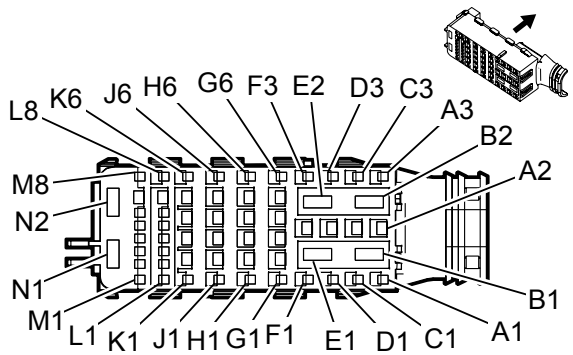


### Connector Part Information

Harness Type: Forward Lamp

OEM Connector: 13966830

Service Connector: Pending

Description: 58-Way F 1.5, 2.8, 800 Metri Pack Series (D-BU)

### *Terminal Part Information*

| Terminal Type ID | Terminated Lead | Diagnostic Test Probe | Terminal Removal Tool | Service Terminal | Tray | Core Crimp | Insulation Crimp |
|---|---|---|---|---|---|---|---|
| I | Pending | Pending | Pending | Not Available | Not Available | Not Available | Not Available |

### *X50A Fuse Block - Underhood X1*

| Pin | Size | Color | Circuit | Function | Terminal Type ID | Option |
|---|---|---|---|---|---|---|
| A-C | - | - | - | Not Occupied | - | - |
| D1 | 0.75 | YE | 712 | Left Headlamp Low Beam Supply Voltage | I | - |
| D3 | 0.75 | L-GN/VT | 1315 | Right Front Turn Signal Lamp Supply Voltage | I | - |
| E | - | - | - | Not Occupied | - | - |
| F1 | 0.5 | GY/BN | 309 | Right Park Lamp Supply Voltage | I | - |
| F2 | 0.75 | GY/VT | 228 | Windshield Washer Pump Control | I | - |
| F3 | 0.75 | D-BU/WH | 1314 | Left Front Turn Signal Lamp Supply Voltage | I | - |
| G1 | 0.5 | VT/GY | 709 | Left Park Lamp Supply Voltage | I | - |
| G4 | 0.5 | BK | 150 | Ground | I | - |
| H2 | 0.75 | GY/D-BU | 7538 | Left Front DRL Supply Voltage | I | - |
| H4 | 0.5 | WH | 311 | Right Headlamp High Beam Supply Voltage | I | - |
| H6 | 0.75 | D-BU/BN | 7539 | Right Front DRL Supply Voltage | I | - |
| J2 | 0.75 | BN/GY | 29 | Horn Control | I | - |
| J3 | 0.5 | BN/VT | 2234 | Front Fog Lamp Supply Voltage | I | - |
| J4 | 0.5 | WH | 711 | Left Headlamp High Beam Supply Voltage | I | - |

| | | | | | | |
|---|---|---|---|---|---|---|
| J5 | 0.75 | YE | 312 | Right Headlamp Low Beam Supply Voltage | I | - |
| K- | - | - | - | Not Occupied | - | - |

## X50A Fuse Block - Underhood X2

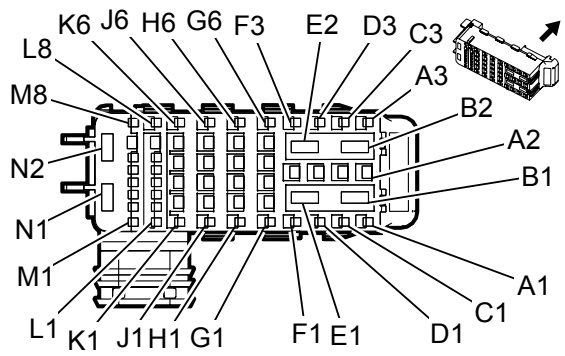


### Connector Part Information

Harness Type: Engine

OEM Connector: 13967717

Service Connector: Pending

Description: 58-Way F 1.5, 2.8, 800 Metri Pack Series (GN)

### *Terminal Part Information*

| Terminal Type ID | Terminated Lead | Diagnostic Test Probe | Terminal Removal Tool | Service Terminal | Tray | Core Crimp | Insulation Crimp |
|---|---|---|---|---|---|---|---|
| I | Pending | Pending | Pending | Not Available | Not Available | Not Available | Not Available |
| II | Pending | J-35616-44 (YE) | J-38125-558 | 12110127 | 19 | F | G |
| III | 13575355 | J-35616-44 (YE) | J-38125-558 | 12110127 | 19 | F | G |

### *X50A Fuse Block - Underhood X2*

| Pin | Size | Color | Circuit | Function | Terminal Type ID | Option |
|---|---|---|---|---|---|---|
| A1 | 0.5 | WH/GY | 459 | A/C Compressor Clutch Relay Control | I | - |
| B | - | - | - | Not Occupied | - | - |
| C1 | 0.75 | BN/L-GN | 59 | A/C Compressor Clutch Supply Voltage | I | - |
| D3 | 0.5 | YE/BK | 625 | Starter Enable Relay Control | I | - |
| E2 | 4<br>3 | YE<br>YE | 6<br>6 | Starter Solenoid Crank Voltage<br>Starter Solenoid Crank Voltage | II | - |
| F2 | 2.5 | BK | 550 | Ground | I | - |
| G1 | 0.5 | WH | 2368 | Cooling Fan Control Signal | I | - |
| G3 | 0.75<br>0.5 | VT/D-BU<br>VT/D-BU | 5293<br>5293 | Powertrain Main Relay Fused Supply (4)<br>Powertrain Main Relay Fused Supply (4) | I | - |
| G4 | 2.5 | VT/D-BU | 5290 | Powertrain Main Relay Fused Supply (1) | I | - |
| G5 | 0.75 | RD/L-GN | 1840 | Battery Positive Voltage | I | - |
| G6 | 0.5 | RD/WH | 3440 | Battery Positive Voltage | I | - |
| H1 | 0.5 | L-GN/GY | 465 | Fuel Pump Primary Relay Control | I | - |

| | | | | | | |
|---|---|---|---|---|---|---|
| H1 | 0.5 | L-GN/GY | 465 | Fuel Pump Primary Relay Control | I | - |
| H2 | 1.5 | VT/D-BU | 5291 | Powertrain Main Relay Fused Supply (2) | I | - |
| H3 | 0.75 | VT/D-BU | 5293 | Powertrain Main Relay Fused Supply (4) | I | - |
| H5 | 0.5 | RD/BN | 440 | Battery Positive Voltage | I | - |
| H6 | 0.5 | YE | 5991 | Powertrain Relay Coil Control | I | - |
| J2 | 0.5 | VT/D-BU | 5294 | Powertrain Main Relay Fused Supply (5) | I | - |
| J4 | 1.5 | VT/D-BU | 5292 | Powertrain Main Relay Fused Supply (3) | I | - |
| J5 | 0.5 | VT/D-BU | 5294 | Powertrain Main Relay Fused Supply (5) | I | - |
| J6 | 0.75 | VT/D-BU | 5290 | Powertrain Main Relay Fused Supply (1) | I | - |
| K3 | 0.75 | VT/D-BU | 5291 | Powertrain Main Relay Fused Supply (2) | I | - |
| K5 | 0.75 | VT/D-BU | 5292 | Powertrain Main Relay Fused Supply (3) | I | - |
| L7 | 0.5 | VT/BK | 2139 | Run/Crank Ignition 1 Voltage | I | - |
| M1 | 0.5 | YE/D-BU | 1465 | Secondary Fuel Pump Relay Control | I | - |
| M3 | 0.5 | WH/BK | 2366 | Cooling Fan Control Relay Speed Signal | I | - |
| M6 | 0.75 | BK/WH | 451 | Signal Ground | I | - |
| M7 | 0.5 | VT/L-GN | 439 | Run/Crank Ignition 1 Voltage | I | - |
| M8 | 0.5 | VT/WH | 239 | Run/Crank Ignition 1 Voltage | I | - |
| N1 | 2.5 | RD/L-GN | 742 | Battery Positive Voltage | III | - |

## X50A Fuse Block - Underhood X3

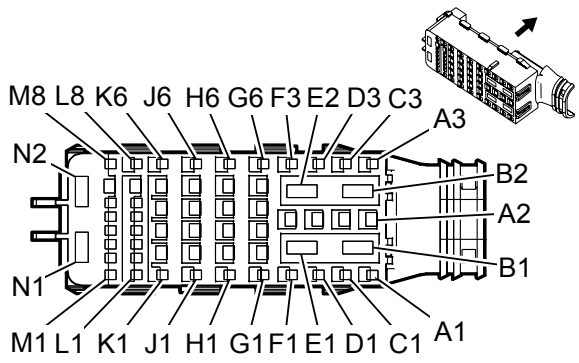


### Connector Part Information

Harness Type: Body

OEM Connector: 13935987

Service Connector: Pending

Description: 58-Way F 1.5, 2.8, 800 Metri Pack Series (GY)

### *Terminal Part Information*

| Terminal Type ID | Terminated Lead | Diagnostic Test Probe | Terminal Removal Tool | Service Terminal | Tray | Core Crimp | Insulation Crimp |
|---|---|---|---|---|---|---|---|
| I | Pending | Pending | Pending | Not Available | Not Available | Not Available | Not Available |
| II | Pending | J-35616-44 (YE) | J-38125-558 | 12092445 | 18 | G | G |
| III | 13575355 | J-35616-44 (YE) | J-38125-558 | 12110127 | 19 | F | G |

### *X50A Fuse Block - Underhood X3*

| Pin | Size | Color | Circuit | Function | Terminal Type ID | Option |
|---|---|---|---|---|---|---|
| A1 | 0.5 | YE/D-BU | 18 | Left Rear Stop/Turn Lamp Supply Voltage | I | - |
| B1 | 4 | RD/GY | 1342 | Battery Positive Voltage | II | - |
| B2 | 2.5 | RD/D-BU | 1842 | Battery Positive Voltage | III | - |
| C1 | 0.5 | BN/L-GN | 19 | Right Rear Stop/Turn Lamp Supply Voltage | I | - |
| D1 | 0.75 | L-GN/VT | 1315 | Right Front Turn Signal Lamp Supply Voltage | I | - |
| E | - | - | - | Not Occupied | - | - |
| F1 | 0.75 | D-BU/WH | 1314 | Left Front Turn Signal Lamp Supply Voltage | I | - |
| F3 | 0.5 | D-BU/L-GN | 962 | | I | - |
| G1 | 0.75 | D-BU/BN | 7539 | Right Front DRL Supply Voltage | I | - |
| H2 | 1 | BK | 550 | Ground | I | - |
| J1 | 0.35 | WH/VT | 860 | Front Windshield Wiper Switch High Signal | I | - |
| K1 | 0.5 | VT/WH | 5065 | Stop Lamp Relay Coil Supply Voltage | I | - |
| K3 | 1 | YE/BN | 95 | Windshield Wiper Motor Low Speed Control | I | - |

| | | | | | | |
|---|---|---|---|---|---|---|
| K4 | 1 | WH | 92 | Windshield Wiper Motor High Speed Control | I | - |
| K6 | 0.35 | BN/GY | 2268 | Windshield Washer Relay Control | I | - |
| L2 | 0.35 | BN/VT | 1969 | Headlamp High Beam Relay Control | I | - |
| L4 | 0.35 | GY | 91 | Windshield Wiper Motor Relay Coil Supply Voltage | I | - |
| L5 | 0.5 | BN/WH | 1317 | Fog Lamp Relay Control | I | - |
| L6 | 0.35 | BN/WH | 28 | Horn Relay Control | I | - |
| L7 | 0.5 | BN/YE | 2267 | Mirror Heating Element Supply Voltage | I | - |
| M1 | 0.75 | YE | 312 | Right Headlamp Low Beam Supply Voltage | I | - |
| M5 | 0.5 | D-BU/L-GN | 961 | | I | - |
| M6 | 0.5 | VT/GY | 1054 | Stop Lamp Supply Voltage | I | - |
| M7 | 2.5 | RD/L-GN | 965 | | I | - |
| N- | - | - | - | Not Occupied | - | - |

# X50A Fuse Block - Underhood X3

## Connector Part Information

Harness Type: Body

OEM Connector: 13979971

Service Connector: Pending

Description: 58 F 1.5, 2.8, 800 Metri Pack Series

## *Terminal Part Information*

| Terminal Type ID | Terminated Lead | Diagnostic Test Probe | Terminal Removal Tool | Service Terminal | Tray | Core Crimp | Insulation Crimp |
|---|---|---|---|---|---|---|---|
| I | Pending | Pending | Pending | Not Available | Not Available | Not Available | Not Available |
| II | Pending | J-35616-44 (YE) | J-38125-558 | 12092445 | 18 | G | G |

## *X50A Fuse Block - Underhood X3*

| Pin | Size | Color | Circuit | Function | Terminal Type ID | Option |
|---|---|---|---|---|---|---|
| A1 | 0.5 | YE/D-BU | 18 | Left Rear Stop/Turn Lamp Supply Voltage | I | - |
| B1 | 4 | RD/GY | 1342 | Battery Positive Voltage | II | - |
| C1 | 0.5 | BN/L-GN | 19 | Right Rear Stop/Turn Lamp Supply Voltage | I | - |
| D1 | 0.75 | L-GN/VT | 1315 | Right Front Turn Signal Lamp Supply Voltage | I | - |
| E | - | - | - | Not Occupied | - | - |
| F1 | 0.75 | D-BU/WH | 1314 | Left Front Turn Signal Lamp Supply Voltage | I | - |
| F3 | 0.5 | D-BU/L-GN | 962 | | I | - |
| G1 | 0.75 | D-BU/BN | 7539 | Right Front DRL Supply Voltage | I | - |
| H2 | 1 | BK | 550 | Ground | I | - |
| J1 | 0.35 | WH/VT | 860 | Front Windshield Wiper Switch High Signal | I | - |
| K1 | 0.5 | VT/WH | 5065 | Stop Lamp Relay Coil Supply Voltage | I | - |
| K3 | 1 | YE/BN | 95 | Windshield Wiper Motor Low Speed Control | I | - |
| K4 | 1 | WH | 92 | Windshield Wiper Motor High Speed Control | I | - |
| K6 | 0.35 | BN/GY | 2268 | Windshield Washer Relay Control | I | - |
| L2 | 0.35 | BN/VT | 1969 | Headlamp High Beam Relay Control | I | - |
| L4 | 0.35 | GY | 91 | Windshield Wiper Motor Relay Coil Supply Voltage | I | - |
| L5 | 0.5 | BN/WH | 1317 | Fog Lamp Relay Control | I | - |
| L6 | 0.35 | BN/WH | 28 | Horn Relay Control | I | - |
| L7 | 0.5 | BN/YE | 2267 | Mirror Heating Element Supply Voltage | I | - |
| M1 | 0.75 | YE | 312 | Right Headlamp Low Beam Supply Voltage | I | - |

| | | | | | | |
|---|---|---|---|---|---|---|
| M5 | 0.5 | D-BU/L-GN | 961 | | I | - |
| M6 | 0.5 | VT/GY | 1054 | Stop Lamp Supply Voltage | I | - |
| M7 | 2.5 | RD/L-GN | 965 | | I | - |
| N- | - | - | - | Not Occupied | - | - |

## X50A Fuse Block - Underhood X4

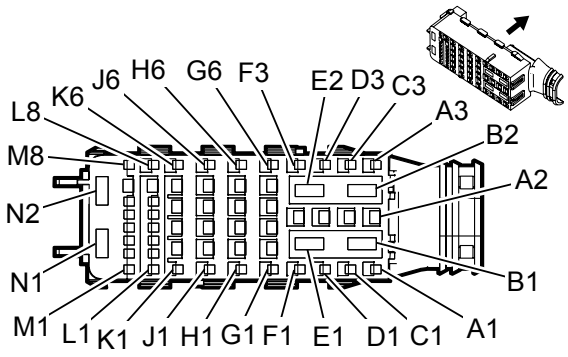


### Connector Part Information

Harness Type: Body

OEM Connector: 13935986

Service Connector: Pending

Description: 58-Way F 1.5, 2.8, 800 Metri Pack Series (BK)

### *Terminal Part Information*

| Terminal Type ID | Terminated Lead | Diagnostic Test Probe | Terminal Removal Tool | Service Terminal | Tray | Core Crimp | Insulation Crimp |
|---|---|---|---|---|---|---|---|
| I | Pending | Pending | Pending | Not Available | Not Available | Not Available | Not Available |
| II | Pending | J-35616-44 (YE) | J-38125-558 | 12110127 | 19 | F | G |
| III | 13575355 | J-35616-44 (YE) | J-38125-558 | 12110127 | 19 | F | G |

### *X50A Fuse Block - Underhood X4*

| Pin | Size | Color | Circuit | Function | Terminal Type ID | Option |
|---|---|---|---|---|---|---|
| A3 | 0.5 | L-GN/WH | 24 | Backup Lamp Supply Voltage | I | - |
| B2 | 5 | RD/VT | 842 | Battery Positive Voltage | II | - |
| C | - | - | - | Not Occupied | - | - |
| D3 | 0.5 | VT/L-GN | 1739 | Run/Crank Ignition 1 Voltage | I | - |
| E2 | 5 | RD/D-BU | 42 | Battery Positive Voltage | II | - |
| F3 | 0.35 | L-GN/WH | 24 | Backup Lamp Supply Voltage | I | - |
| G2 | 2.5 | RD/L-GN | 966 | | I | - |
| H5 | 2.5 | RD/L-GN | 242 | Battery Positive Voltage | I | - |
| J1 | 0.75 | GY/D-BU | 7538 | Left Front DRL Supply Voltage | I | - |
| J6 | 0.75 | BK/WH | 451 | Signal Ground | I | - |
| K1 | 0.75 | YE | 712 | Left Headlamp Low Beam Supply Voltage | I | - |
| K2 | 2.5 | RD/L-GN | 968 | | I | - |
| K5 | 2.5 | RD/L-GN | 967 | | I | - |

| | | | | | | |
|---|---|---|---|---|---|---|
| K6 | 0.5 | VT/GY | 709 | Left Park Lamp Supply Voltage | I | - |
| L1 | 0.5 | D-BU/L-GN | 964 | | I | - |
| L2 | 0.35 | YE/GY | 5187 | Right Trailer Turn Signal Lamp | I | - |
| L3 | 0.35 | D-BU/BN | 38 | Backup Lamp Relay Control | I | - |
| L4 | 0.35 | D-BU/WH | 5186 | Left Trailer Turn Signal Lamp | I | - |
| L5 | 0.35 | D-BU | 45 | Park Lamp Relay Control | I | - |
| L6 | 0.5 | D-BU/L-GN | 963 | | I | - |
| M1 | 0.75 | RD/YE | 2340 | Battery Positive Voltage | I | - |
| M2 | 0.35 | BN/VT | 193 | Rear Defog Relay Control | I | - |
| M5 | 0.35 | L-GN/VT | 5199 | Run/Crank Relay Coil Control | I | - |
| N1 | 2.5 | BN/VT | 293 | Rear Defog Element Supply Voltage | III | - |

## X50A Fuse Block - Underhood X5

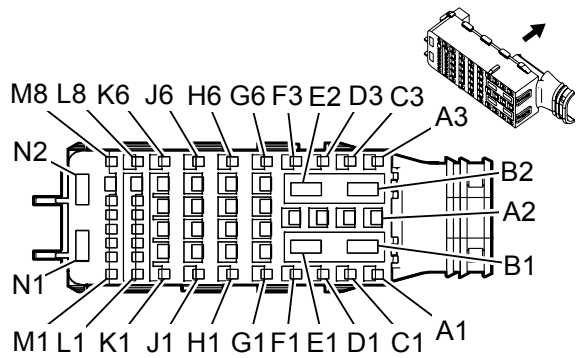


### Connector Part Information

Harness Type: Chassis

OEM Connector: 13935988

Service Connector: Service by Harness - See Part Catalog

Description: 58-Way F 1.5, 2.8, 800 Metri Pack Series (NA)

### *Terminal Part Information*

| Terminal Type ID | Terminated Lead | Diagnostic Test Probe | Terminal Removal Tool | Service Terminal | Tray | Core Crimp | Insulation Crimp |
|---|---|---|---|---|---|---|---|
| I | Pending | Pending | Pending | Not Available | Not Available | Not Available | Not Available |
| II | Pending | J-35616-44 (YE) | J-38125-558 | 12110127 | 19 | F | G |

### *X50A Fuse Block - Underhood X5*

| Pin | Size | Color | Circuit | Function | Terminal Type ID | Option |
|---|---|---|---|---|---|---|
| A2 | 0.75 | YE/D-BU | 18 | Left Rear Stop/Turn Lamp Supply Voltage | I | - |
| A3 | 0.75 | BN/L-GN | 19 | Right Rear Stop/Turn Lamp Supply Voltage | I | - |
| B1 | 5 | RD/YE | 442 | Battery Positive Voltage | II | - |
| C1 | 0.75 | L-GN/WH | 24 | Backup Lamp Supply Voltage | I | - |
| D1 | 0.5 | VT/L-GN | 1739 | Run/Crank Ignition 1 Voltage | I | - |
| D2 | 1.5 | GY | 120 | Fuel Pump Supply Voltage | I | - |
| E | - | - | - | Not Occupied | - | - |
| F1 | 0.5 | L-GN/WH | 24 | Backup Lamp Supply Voltage | I | - |
| G4 | 0.75 | RD/WH | 2040 | Battery Positive Voltage | I | - |
| H3 | 0.5 | RD/L-GN | 1840 | Battery Positive Voltage | I | - |
| J2 | 2.5 | RD/L-GN | 242 | Battery Positive Voltage | I | - |
| J3 | 1.5 | GY/BN | 2109 | Trailer Park Lamp Supply Voltage | I | - |
| J4 | 2.5 | RD/VT | 1640 | Battery Positive Voltage | I | - |
| J5 | 0.75 | PU/L-GN | 439 | Run/Crank Ignition 1 Voltage | I | - |

| | | | | | | |
|---|---|---|---|---|---|---|
| K2 | 0.75 | VT/GY | 709 | Left Park Lamp Supply Voltage | I | - |
| K4 | 0.75 | GY/BN | 309 | Right Park Lamp Supply Voltage | I | - |
| K5 | 0.75 | YE/GY | 1618 | Left Rear Trailer Stop/Turn Lamp Supply Voltage | I | - |
| K6 | 0.75 | L-GN/VT | 1619 | Right Rear Trailer Stop/Turn Lamp Supply Voltage | I | - |
| L7 | 2.5 | GY | 120 | Fuel Pump Supply Voltage | I | - |
| M1 | 0.5 | VT/GY | 1054 | Stop Lamp Supply Voltage | I | - |
| M8 | 0.75 | WH/L-GN | 1624 | Trailer Backup Lamp Supply Voltage | I | - |
| N2 | 4 | RD/L-GN | 742 | Battery Positive Voltage | II | - |

## X50D Fuse Block - Battery X1

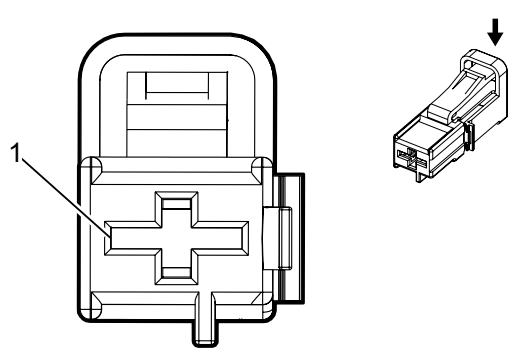


### Connector Part Information

Harness Type: Body

OEM Connector: 13629098

Service Connector: Pending

Description: 1-Way F 8.0 Series (BU)

### *Terminal Part Information*

| Terminal Type ID | Terminated Lead | Diagnostic Test Probe | Terminal Removal Tool | Service Terminal | Tray | Core Crimp | Insulation Crimp |
|---|---|---|---|---|---|---|---|
| I | Pending | Pending | Pending | Not Available | Not Available | Not Available | Not Available |

### *X50D Fuse Block - Battery X1*

| Pin | Size | Color | Circuit | Function | Terminal Type ID | Option |
|---|---|---|---|---|---|---|
| 1 | 10 | RD/GY | 642 | Battery Positive Voltage | I | - |

## X50D Fuse Block - Battery X2

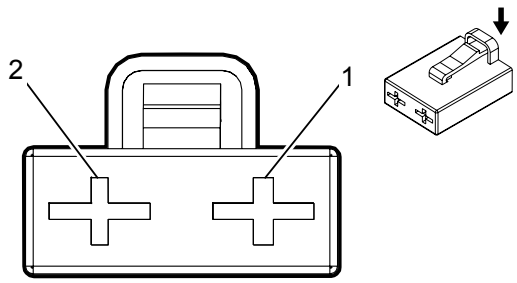


### Connector Part Information

Harness Type: Body

OEM Connector: 13627842

Service Connector: Not Available

Description: 2-Way F 8.0 Series (BU)

### *Terminal Part Information*

| Terminal Type ID | Terminated Lead | Diagnostic Test Probe | Terminal Removal Tool | Service Terminal | Tray | Core Crimp | Insulation Crimp |
|---|---|---|---|---|---|---|---|
| I | Not Available | Not Available | Not Available | Not Available | Not Available | Not Available | Not Available |

### *X50D Fuse Block - Battery X2*

| Pin | Size | Color | Circuit | Function | Terminal Type ID | Option |
|---|---|---|---|---|---|---|
| 1 | 6 | RD/GY | 142 | Battery Positive Voltage | I | - |
| 2 | 6 | RD/L-GN | 242 | Battery Positive Voltage | I | - |

## X50D Fuse Block - Battery X7

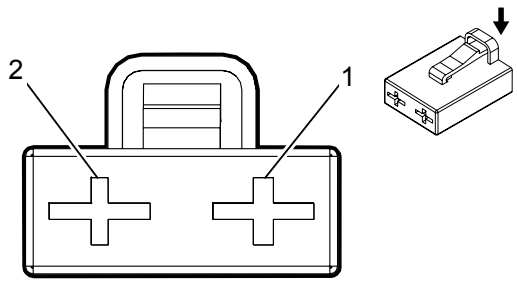


### Connector Part Information

Harness Type: Body

OEM Connector: 13627842

Service Connector: Pending

Description: 2-Way F 8.0 Series (BU)

### *Terminal Part Information*

| Terminal Type ID | Terminated Lead | Diagnostic Test Probe | Terminal Removal Tool | Service Terminal | Tray | Core Crimp | Insulation Crimp |
|---|---|---|---|---|---|---|---|
| I | Pending | Pending | Pending | Not Available | Not Available | Not Available | Not Available |

### *X50D Fuse Block - Battery X7*

| Pin | Size | Color | Circuit | Function | Terminal Type ID | Option |
|---|---|---|---|---|---|---|
| 1 | 6 | RD/GY | 142 | Battery Positive Voltage | I | - |
| 2 | 6 | RD/L-GN | 242 | Battery Positive Voltage | I | - |

## X51L Fuse Block - Instrument Panel Left X1

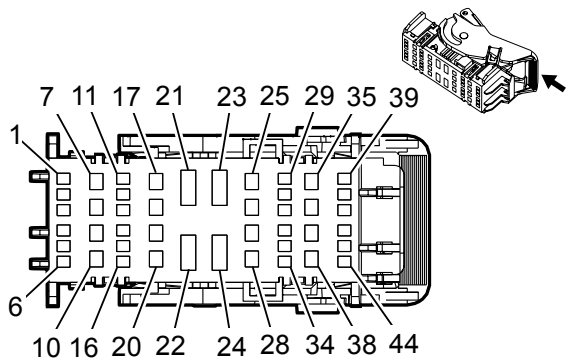


### Connector Part Information

Harness Type: Body

OEM Connector: 13967687

Service Connector: Pending

Description: 44-Way F 1.5, 2.8, 800 Metri Pack Series (BK)

### *Terminal Part Information*

| Terminal Type ID | Terminated Lead | Diagnostic Test Probe | Terminal Removal Tool | Service Terminal | Tray | Core Crimp | Insulation Crimp |
|---|---|---|---|---|---|---|---|
| I | Pending | Pending | Pending | Not Available | Not Available | Not Available | Not Available |
| II | Pending | J-35616-44 (YE) | J-38125-558 | 12110127 | 19 | F | G |

### *X51L Fuse Block - Instrument Panel Left X1*

| Pin | Size | Color | Circuit | Function | Terminal Type ID | Option |
|---|---|---|---|---|---|---|
| 1-3 | - | - | - | Not Occupied | - | - |
| 4 | 0.75 | RD/L-GN | 5140 | Battery Positive Voltage | I | - |
| 5 | 0.5<br>0.35 | RD/L-GN<br>RD/L-GN | 4440<br>4440 | Battery Positive Voltage<br>Battery Positive Voltage | I | - |
| 6-14 | - | - | - | Not Occupied | - | - |
| 15 | 0.35 | L-GN/GY | 5286 | Adjustable Pedal Switch Forward Signal | I | - |
| 16 | 0.5<br>0.35 | RD/VT<br>RD/VT | 1940<br>1940 | Battery Positive Voltage<br>Battery Positive Voltage | I | - |
| 17 | 2.5 | RD/YE | 3740 | Battery Positive Voltage | I | - |
| 18 | 0.75 | RD/L-GN | 5140 | Battery Positive Voltage | I | - |
| 19 | - | - | - | Not Occupied | - | - |
| 20 | 0.75 | L-GN/VT | 5130 | Adjustable Pedal Actuator Forward Control | I | - |
| 21 | 5 | RD/VT | 842 | Battery Positive Voltage | II | - |
| 22 | - | - | - | Not Occupied | - | - |
| 23 | 5 | RD/D-BU | 42 | Battery Positive Voltage | II | - |

| | | | | | | |
|---|---|---|---|---|---|---|
| 23 | 5 | RD/D-BU | 42 | Battery Positive Voltage | II | - |
| 24-26 | - | - | - | Not Occupied | - | - |
| 27 | 2.5 | RD/YE | 5040 | Battery Positive Voltage | I | - |
| 28 | 0.75 | YE | 5129 | Adjustable Pedal Actuator Rearward Control | I | - |
| 29 | - | - | - | Not Occupied | - | - |
| 30 | 0.5 | VT/WH | 1939 | Run/Crank Ignition 1 Voltage | I | - |
| 31 | - | - | - | Not Occupied | - | - |
| 32 | 0.5 | VT/L-GN | 1739 | Run/Crank Ignition 1 Voltage | I | - |
| 33 | 0.35 | WH/GY | 5285 | Adjustable Pedal Switch Rearward Signal | I | - |
| 34-35 | - | - | - | Not Occupied | - | - |
| 36 | 2.5 | RD/D-BU | 1842 | Battery Positive Voltage | I | - |
| 37 | 2.5 | RD/D-BU | 1842 | Battery Positive Voltage | I | - |
| 38-41 | - | - | - | Not Occupied | - | - |
| 42 | 0.35 | L-GN/VT | 5199 | Run/Crank Relay Coil Control | I | - |
| 43 | 0.35 | GY/VT | 755 | RAP Relay Coil Control | I | - |
| 44 | 0.35 | VT/YE | 43 | Accessory Voltage | I | - |

## X51L Fuse Block - Instrument Panel Left X2

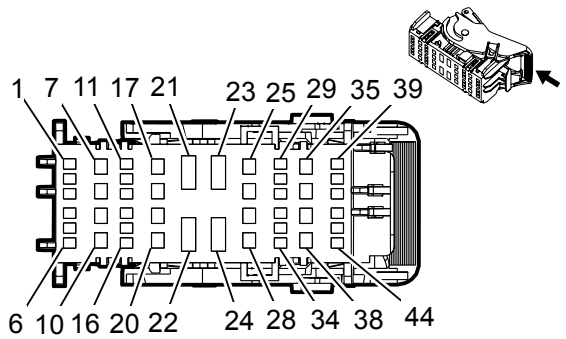


### Connector Part Information

Harness Type: Instrument Panel

OEM Connector: 13967688

Service Connector: Pending

Description: 44-Way F 1.5, 2.8, 800 Metri Pack Series (GY)

### *Terminal Part Information*

| Terminal Type ID | Terminated Lead | Diagnostic Test Probe | Terminal Removal Tool | Service Terminal | Tray | Core Crimp | Insulation Crimp |
|---|---|---|---|---|---|---|---|
| I | Pending | Pending | Pending | Not Available | Not Available | Not Available | Not Available |

### *X51L Fuse Block - Instrument Panel Left X2*

| Pin | Size | Color | Circuit | Function | Terminal Type ID | Option |
|---|---|---|---|---|---|---|
| 1-2 | - | - | - | Not Occupied | - | - |
| 3 | 0.5 | YE | 6817 | LED Backlight Dimming Control | I | - |
| 4 | 0.35 | BN | 6136 | Supply Voltage | I | - |
| 5 | 0.5 | RD/D-BU | 540 | Battery Positive Voltage | I | - |
| 6 | - | - | - | Not Occupied | - | - |
| 7 | 0.5 | RD/BN | 2940 | Battery Positive Voltage | I | - |
| 8 | 1 | RD/GY | 2140 | Battery Positive Voltage | I | - |
| 9 | - | - | - | Not Occupied | - | - |
| 10 | 1.5 | RD/BN | 4240 | Battery Positive Voltage | I | - |
| 11-14 | - | - | - | Not Occupied | - | - |
| 15 | 0.5 | VT/GY | 539 | Run/Crank Ignition 1 Voltage | I | - |
| 16-17 | - | - | - | Not Occupied | - | - |
| 18 | 0.5 | RD/WH | 2740 | Battery Positive Voltage | I | - |
| 19-24 | - | - | - | Not Occupied | - | - |
| 25 | 0.5 | RD/VT | 3340 | Battery Positive Voltage | I | - |

| | | | | | | |
|---|---|---|---|---|---|---|
| 26 | 0.35 | RD/D-BU | 3240 | Battery Positive Voltage | I | - |
| 27 | - | - | - | Not Occupied | - | - |
| 28 | 0.5 | VT/BK | 1639 | Run/Crank Ignition 1 Voltage | I | - |
| 29-34 | - | - | - | Not Occupied | - | - |
| 35 | 0.5 | RD/GY | 2840 | Battery Positive Voltage | I | - |
| 36 | - | - | - | Not Occupied | - | - |
| 37 | 0.5 | VT/WH | 1139 | Run/Crank Ignition 1 Voltage | I | - |
| 38 | 0.35 | VT/L-GN | 1739 | Run/Crank Ignition 1 Voltage | I | - |
| 39-42 | - | - | - | Not Occupied | - | - |
| 43 | 0.35 | YE | 6812 | Out of Park Signal | I | - |
| 44 | 0.75 | BK | 1850 | Ground | I | - |

## X51L Fuse Block - Instrument Panel Left X3

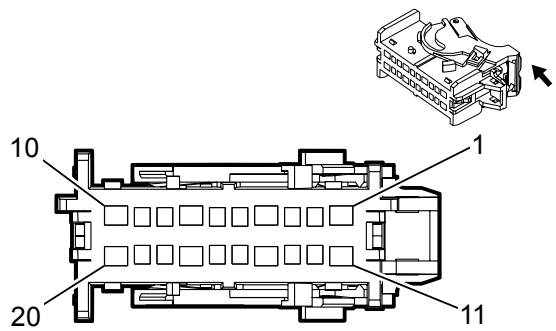


### Connector Part Information

Harness Type: Headliner

OEM Connector: 15522322

Service Connector: Not Available

Description: 20-Way F 1.5, 2.8 Series (BK)

### *Terminal Part Information*

| Terminal Type ID | Terminated Lead | Diagnostic Test Probe | Terminal Removal Tool | Service Terminal | Tray | Core Crimp | Insulation Crimp |
|---|---|---|---|---|---|---|---|
| I | Not Available | Not Available | Not Available | Not Available | Not Available | Not Available | Not Available |

### *X51L Fuse Block - Instrument Panel Left X3*

| Pin | Size | Color | Circuit | Function | Terminal Type ID | Option |
|---|---|---|---|---|---|---|
| 1-10 | - | - | - | Not Occupied | - | - |
| 11 | 0.35 | VT/YE | 43 | Accessory Voltage | I | - |
| 12 | 0.5 | RD/YE | 240 | Battery Positive Voltage | I | - |
| 13 | 0.35 | VT/L-GN | 1739 | Run/Crank Ignition 1 Voltage | I | - |
| 14 | 0.35<br>0.35 | VT/WH<br>VT/BK | 1139<br>1139 | Run/Crank Ignition 1 Voltage<br>Run/Crank Ignition 1 Voltage | I | - |
| 15-20 | - | - | - | Not Occupied | - | - |

## X51R Fuse Block - Instrument Panel Right X1

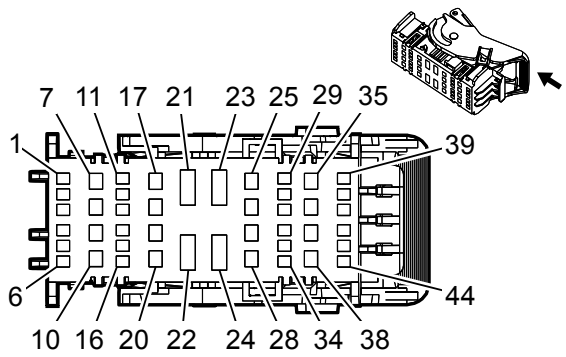


### Connector Part Information

Harness Type: Body

OEM Connector: 13967689

Service Connector: Pending

Description: 44-Way F 1.5, 2.8, 800 Metri Pack Series (NA)

### *Terminal Part Information*

| Terminal Type ID | Terminated Lead | Diagnostic Test Probe | Terminal Removal Tool | Service Terminal | Tray | Core Crimp | Insulation Crimp |
|---|---|---|---|---|---|---|---|
| I | Pending | Pending | Pending | Not Available | Not Available | Not Available | Not Available |
| II | Pending | J-35616-44 (YE) | J-38125-558 | 12092445 | 18 | Not Available | Not Available |
| III | Pending | J-35616-44 (YE) | J-38125-558 | 12110127 | 19 | F | G |

### *X51R Fuse Block - Instrument Panel Right X1*

| Pin | Size | Color | Circuit | Function | Terminal Type ID | Option |
|---|---|---|---|---|---|---|
| 1 | 1.5<br>0.75 | GY<br>GY | 295<br>295 | Door Lock Actuator Lock Control<br>Door Lock Actuator Lock Control | I | - |
| 2 | 1.5 | WH/D-BU | 3266 | Child Security Lock Motor Unlock Control | I | - |
| 3 | 0.35 | VT/YE | 3267 | Child Security Lock Relay Control | I | - |
| 4 | 1.5 | GY/L-GN | 3271 | Door Lock Control (2) | I | - |
| 5 | - | - | - | Not Occupied | - | - |
| 6 | 0.35 | GY/VT | 755 | RAP Relay Coil Control | I | - |
| 7-8 | - | - | - | Not Occupied | - | - |
| 9 | 2.5 | GY/L-GN | 5441 | Endgate Window Regulator Down Signal | I | - |
| 10 | 2.5 | YE/D-BU | 5442 | Endgate Window Regulator Up Signal | I | - |
| 11 | - | - | - | Not Occupied | - | - |
| 12 | 0.75 | RD/D-BU | 4540 | Battery Positive Voltage | I | - |
| 13 | 0.75 | RD/VT | 2640 | Battery Positive Voltage | I | - |
| 14 | - | - | - | Not Occupied | - | - |

| | | | | | | |
|---|---|---|---|---|---|---|
| 14 | - | - | - | Not Occupied | - | - |
| 15 | 0.5 | VT/GY | 709 | Left Park Lamp Supply Voltage | I | - |
| 16 | 0.5 | RD/BN | 1140 | Battery Positive Voltage | I | - |
| 17 | - | - | - | Not Occupied | - | - |
| 18 | 1.5<br>1.5 | VT/YE<br>RD/D-BU | 143<br>840 | Accessory Voltage<br>Battery Positive Voltage | I | - |
| 19 | 2.5 | RD/WH | 1340 | Battery Positive Voltage | I | - |
| 20 | 2.5 | RD/WH | 1340 | Battery Positive Voltage | I | - |
| 21 | 6 | RD/L-GN | 242 | Battery Positive Voltage | II | - |
| 22 | 4 | RD/VT | 542 | Battery Positive Voltage | III | - |
| 23 | - | - | - | Not Occupied | - | - |
| 24 | 6 | RD/GY | 142 | Battery Positive Voltage | II | - |
| 25-26 | - | - | - | Not Occupied | - | - |
| 27 | 0.75 | RD/VT | 340 | Battery Positive Voltage | I | - |
| 28 | - | - | - | Not Occupied | - | - |
| 29 | 1.5 | D-BU/WH | 195 | Door Lock Control | I | - |
| 30-32 | - | - | - | Not Occupied | - | - |
| 33 | 0.75 | RD/WH | 3440 | Battery Positive Voltage | I | - |
| 34-36 | - | - | - | Not Occupied | - | - |
| 37 | 0.75 | RD/L-GN | 6140 | Battery Positive Voltage | I | - |
| 38 | 2.5 | RD/BN | 1440 | Battery Positive Voltage | I | - |
| 39 | - | - | - | Not Occupied | - | - |
| 40 | 0.75 | GY | 5911 | Door Lock Actuator Lock Control 2 | I | - |
| 41-42 | - | - | - | Not Occupied | - | - |
| 43 | 0.75 | RD/L-GN | 3140 | Battery Positive Voltage | I | - |
| 44 | - | - | - | Not Occupied | - | - |

## X51R Fuse Block - Instrument Panel Right X2

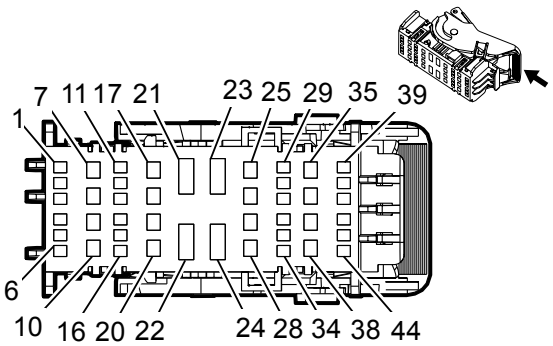


### Connector Part Information

Harness Type: Instrument Panel

OEM Connector: 13967690

Service Connector: Pending

Description: 44-Way F 1.5, 2.8, 800 Metri Pack Series (GN)

### *Terminal Part Information*

| Terminal Type ID | Terminated Lead | Diagnostic Test Probe | Terminal Removal Tool | Service Terminal | Tray | Core Crimp | Insulation Crimp |
|---|---|---|---|---|---|---|---|
| I | Pending | Pending | Pending | Not Available | Not Available | Not Available | Not Available |
| II | 13575355 | J-35616-44 (YE) | J-38125-558 | 12110127 | 19 | F | G |
| III | Pending | J-35616-35 (VT) | J-38125-12A | 1326030-8 | 17 | A | 4 |

### *X51R Fuse Block - Instrument Panel Right X2*

| Pin | Size | Color | Circuit | Function | Terminal Type ID | Option |
|---|---|---|---|---|---|---|
| 1-3 | - | - | - | Not Occupied | - | - |
| 4 | 0.5 | BN/WH | 1429 | Standing Lamp Relay Control | I | - |
| 5 | 0.5 | BK | 1050 | Ground | I | - |
| 6 | - | - | - | Not Occupied | - | - |
| 7 | 0.75 | RD/VT | 4040 | Battery Positive Voltage | I | - |
| 8 | 0.75 | RD/D-BU | 2540 | Battery Positive Voltage | I | - |
| 9-10 | - | - | - | Not Occupied | - | - |
| 11 | 0.75 | WH/VT | 1430 | Exterior Courtesy Lamp Supply Voltage | I | - |
| 12-15 | - | - | - | Not Occupied | - | - |
| 16 | 0.35 | RD/YE | 3040 | Battery Positive Voltage | I | - |
| 17 | 0.75<br>1 | RD/VT<br>RD/VT | 340<br>340 | Battery Positive Voltage<br>Battery Positive Voltage | I | - |
| 18-21 | - | - | - | Not Occupied | - | - |
| 22 | 2.5 | BK | 1050 | Ground | II | - |

| | | | | | | |
|---|---|---|---|---|---|---|
| 22 | 2.5 | BK | 1050 | Ground | II | - |
| 23-28 | - | - | - | Not Occupied | - | - |
| 29 | 0.5 | RD/BN | 2240 | Battery Positive Voltage | I | - |
| 30-31 | - | - | - | Not Occupied | - | - |
| 32 | 0.35 | YE/VT | 6191 | Power Sliding Window Switch Open Signal | I | - |
| 33 | 0.35 | WH | 6192 | Power Sliding Window Switch Close Signal | I | - |
| 34 | 0.5 | RD/WH | 640 | Battery Positive Voltage | I | - |
| 35 | 2.5 | RD/GY | 4140 | Battery Positive Voltage | I | - |
| 36-37 | - | - | - | Not Occupied | - | - |
| 38 | 1.5 | RD/YE | 2340 | Battery Positive Voltage | III | - |
| 39-44 | - | - | - | Not Occupied | - | - |

## X51R Fuse Block - Instrument Panel Right X3

### Connector Part Information

Harness Type: Headliner

OEM Connector: 15522323

Service Connector: Pending

Description: 20 F 1.5, 2.8 OCS Series

### *Terminal Part Information*

| Terminal Type ID | Terminated Lead | Diagnostic Test Probe | Terminal Removal Tool | Service Terminal | Tray | Core Crimp | Insulation Crimp |
|---|---|---|---|---|---|---|---|
| I | Pending | Pending | Pending | Not Available | Not Available | Not Available | Not Available |
| II | Pending | J-35616-4A (PU) | J-38125-11A | 7116-4110-02 | 9 | E | C |
| III | Pending | J-35616-35 (VT) | J-38125-11A | 7116-4112-02 | 9 | C | D |

### *X51R Fuse Block - Instrument Panel Right X3*

| Pin | Size | Color | Circuit | Function | Terminal Type ID | Option |
|---|---|---|---|---|---|---|
| 1 | 2.5 | RD/L-GN | 3140 | Battery Positive Voltage | I | - |
| 2-7 | - | - | - | Not Occupied | - | - |
| 8 | 0.5 | VT/GY | 709 | Left Park Lamp Supply Voltage | I | - |
| 9 | - | - | - | Not Occupied | - | - |
| 10 | 0.5<br>2.5 | BK<br>BK | 1050<br>1050 | Ground<br>Ground | II | - |
| 11-20 | - | - | - | Not Occupied | - | - |

## X61A Junction Block - Instrument Panel X1

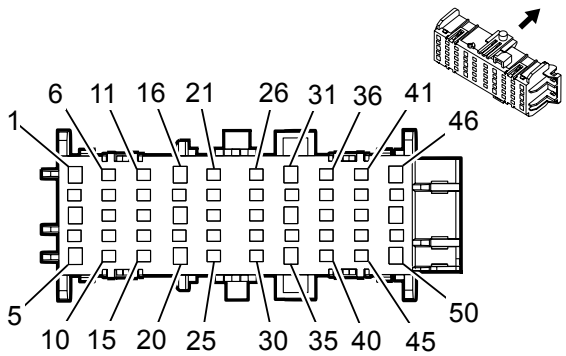


### Connector Part Information

Harness Type: Body

OEM Connector: 15501741

Service Connector: 19301798

Description: 50-Way F 1.5, 2.8 OCS Series (BK)

### *Terminal Part Information*

| Terminal Type ID | Terminated Lead | Diagnostic Test Probe | Terminal Removal Tool | Service Terminal | Tray | Core Crimp | Insulation Crimp |
|---|---|---|---|---|---|---|---|
| I | Pending | Pending | Pending | Not Available | Not Available | Not Available | Not Available |

### *X61A Junction Block - Instrument Panel X1*

| Pin | Size | Color | Circuit | Function | Terminal Type ID | Option |
|---|---|---|---|---|---|---|
| 1 | - | - | - | Not Occupied | - | - |
| 2 | 0.5 | GY/BK | 1570 | Front Axle Actuator Control | I | - |
| 3-10 | - | - | - | Not Occupied | - | - |
| 11 | 0.35 | GY/L-GN | 2555 | Rear Park Assist Disable Signal | I | - |
| 12-15 | - | - | - | Not Occupied | - | - |
| 16 | 2.5 | RD/L-GN | 965 | | I | - |
| 17 | 0.75 | WH/VT | 1430 | Exterior Courtesy Lamp Supply Voltage | I | - |
| 18 | 0.5 | D-BU/YE | 6105 | High Speed GMLAN Serial Data (+) (2) | I | - |
| 19 | 0.5 | D-BU/YE | 6105 | High Speed GMLAN Serial Data (+) (2) | I | - |
| 20 | 0.5 | WH | 6106 | High Speed GMLAN Serial Data (-) (2) | I | - |
| 21 | 0.5 | D-BU/L-GN | 961 | | I | - |
| 22 | 0.35 | VT | 185 | Low Washer Fluid Indicator Control | I | - |
| 23 | 0.35 | BN/YE | 780 | Driver Door Lock Switch Lock Signal | I | - |
| 24 | 0.5 | BN | 7634 | Integrated Trailer Brake Contoller Redundant Manual Apply Signal | I | - |
| 25 | 0.35 | GY | 5697 | Child Lockout Indicator | I | - |

| | | | | | | |
|---|---|---|---|---|---|---|
| 26 | 0.5 | D-BU/RD | 7632 | Integrated Trailer Brake Controller Switch 5 Volt Reference | I | - |
| 27 | 0.5 | BK/BN | 7631 | Integrated Trailer Brake Controller Switch Low Reference | I | - |
| 28 | 0.35 | BN/WH | 781 | Driver Door Lock Switch Unlock Signal | I | - |
| 29 | 0.5 | YE | 7635 | Integrated Trailer Brake Controller Manual Apply Signal | I | - |
| 30 | 0.5 | D-BU/L-GN | 963 | | I | - |
| 31 | 2.5 | RD/L-GN | 966 | | I | - |
| 32 | 0.5 | WH | 6106 | High Speed GMLAN Serial Data (-) (2) | I | - |
| 33 | 0.5 | VT/BN | 300 | Run Ignition 3 Voltage | I | - |
| 34 | 0.5 | D-BU/L-GN | 962 | | I | - |
| 35 | 2.5 | RD/L-GN | 967 | | I | - |
| 36 | 0.35 | WH/GY | 5285 | Adjustable Pedal Switch Rearward Signal | I | - |
| 37 | - | - | - | Not Occupied | - | - |
| 38 | 0.5 | D-BU/L-GN | 964 | | I | - |
| 39 | 0.75<br>1 | D-BU/VT<br>D-BU/VT | 1134<br>1134 | Park Brake Switch Signal<br>Park Brake Switch Signal | I | - |
| 40 | 0.5 | L-GN | 5060 | Low Speed GMLAN Serial Data | I | - |
| 41 | 0.5 | L-GN/BK | 7633 | Integrated Trailer Brake Controller User Gain Signal | I | - |
| 42 | 0.35 | L-GN/GY | 5286 | Adjustable Pedal Switch Forward Signal | I | - |
| 43 | - | - | - | Not Occupied | - | - |
| 44 | 0.5 | WH/D-BU | 3691 | Trailer Brake Apply Signal | I | - |
| 45 | 0.35 | L-GN/BN | 5852 | Rear Park Assist LED Disable Signal | I | - |
| 46 | 0.5 | VT/WH | 1939 | Run/Crank Ignition 1 Voltage | I | - |
| 47 | 0.5 | WH | 6816 | Indicator Dimming Control | I | - |
| 48 | 2.5 | RD/L-GN | 968 | | I | - |
| 49 | 0.5 | YE/WH | 816 | Brake Transmission Shift Interlock Solenoid Control | I | - |
| 50 | 2.5 | BK | 2550 | Ground | I | - |

## X61A Junction Block - Instrument Panel X2

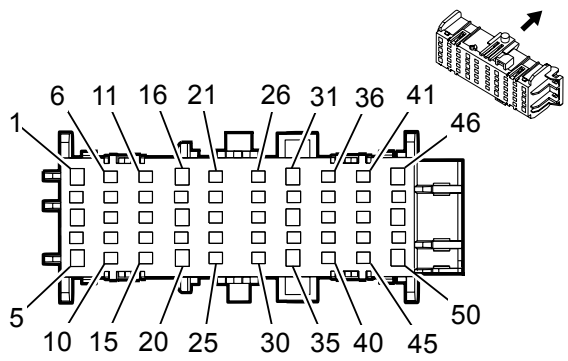


### Connector Part Information

Harness Type: Body

OEM Connector: 15501742

Service Connector: Pending

Description: 50-Way F 1.5, 2.8 OCS Series (GY)

### *Terminal Part Information*

| Terminal Type ID | Terminated Lead | Diagnostic Test Probe | Terminal Removal Tool | Service Terminal | Tray | Core Crimp | Insulation Crimp |
|---|---|---|---|---|---|---|---|
| I | Pending | Pending | Pending | Not Available | Not Available | Not Available | Not Available |
| II | Pending | J-35616-35 (VT) | J-38125-12A | 1326030-8 | 17 | B | F |

### *X61A Junction Block - Instrument Panel X2*

| Pin | Size | Color | Circuit | Function | Terminal Type ID | Option |
|---|---|---|---|---|---|---|
| 1-2 | - | - | - | Not Occupied | - | - |
| 3 | 4 | RD/GY | 1342 | Battery Positive Voltage | II | - |
| 4 | 0.35 | D-BU | 2307 | Passenger Air Bag On Indicator Control | I | - |
| 5 | 0.5 | RD/L-GN | 3140 | Battery Positive Voltage | I | - |
| 6 | 0.5 | WH | 2501 | High Speed GMLAN Serial Data (-) (1) | I | - |
| 7 | 0.5 | D-BU | 2500 | High Speed GMLAN Serial Data (+) (1) | I | - |
| 8 | 0.35 | WH/RD | 6207 | Memory Sensor High Reference | I | - |
| 9 | 0.35 | BK/YE | 1691 | Automatic Day/Night Mirror Low Reference | I | - |
| 10 | 0.35 | YE/WH | 1690 | Automatic Day/Night Mirror Signal | I | - |
| 11 | 0.35 | D-BU | 5952 | Adjustable Pedal Position Sensor Brake Signal | I | - |
| 12 | 0.75<br>1.5 | YE<br>YE | 5129<br>5129 | Adjustable Pedal Actuator Rearward Control<br>Adjustable Pedal Actuator Rearward Control | I | - |
| 13-14 | - | - | - | Not Occupied | - | - |
| 15 | 0.5 | L-GN/WH | 24 | Backup Lamp Supply Voltage | I | - |
| 16 | 2.5 | YE/BN | 1569 | Transfer Case Lock Solenoid Control | I | - |

| | | | | | | |
|---|---|---|---|---|---|---|
| 16 | 2.5 | YE/BN | 1569 | Transfer Case Lock Solenoid Control | I | - |
| 17 | - | - | - | Not Occupied | - | - |
| 18 | 4 | BK | 550 | Ground | II | - |
| 19 | 0.35 | VT/WH | 5234 | Passenger Seat Belt Indicator | I | - |
| 20 | - | - | - | Not Occupied | - | - |
| 21 | 1.5<br>0.75 | L-GN/VT<br>L-GN/VT | 5130<br>5130 | Adjustable Pedal Actuator Forward Control<br>Adjustable Pedal Actuator Forward Control | I | - |
| 22 | 0.35 | BK/GY | 6206 | Memory Sensor Low Reference | I | - |
| 23 | 0.5 | WH/BN | 6815 | Inadvertent Power Control | I | - |
| 24 | 0.35 | L-GN | 2308 | Passenger Air Bag Off Indicator Control | I | - |
| 25 | - | - | - | Not Occupied | - | - |
| 26 | 0.35 | D-BU/GY | 7473 | Incremental Encoder Impulse Signal | I | - |
| 27 | 0.35 | VT | 7476 | Incremental Encoder Sensor Return | I | - |
| 28 | - | - | - | Not Occupied | - | - |
| 29 | 0.5 | GY | 157 | Interior Lamp Control | I | - |
| 30 | 0.35 | GY | 156 | Courtesy Lamp Switch Signal | I | - |
| 31 | 4 | YE/VT | 1553 | Transfer Case Motor Counter Clockwise Control | II | - |
| 32 | 0.35 | YE | 7474 | Incremental Encoder Direction Signal | I | - |
| 33 | 0.5 | VT/GY | 1054 | Stop Lamp Supply Voltage | I | - |
| 34 | - | - | - | Not Occupied | - | - |
| 35 | 2.5 | RD/L-GN | 242 | Battery Positive Voltage | I | - |
| 36 | 0.35 | WH/L-GN | 7475 | Incremental Encoder Sensor (8V) Supply | I | - |
| 37 | 0.5 | YE/WH | 1695 | Four Wheel Drive Wheel Lock Indicator | I | - |
| 38 | 0.35 | VT/YE | 5985 | Accessory Wakeup Serial Data | I | - |
| 39-43 | - | - | - | Not Occupied | - | - |
| 44 | 0.5 | WH/D-BU | 3691 | Trailer Brake Apply Signal | I | - |
| 45 | - | - | - | Not Occupied | - | - |
| 46 | 4 | YE/GY | 1552 | Transfer Case Motor Clockwise Control | II | - |
| 47 | 0.5 | L-GN/GY | 817 | Vehicle Speed Signal | I | - |
| 48 | 2.5 | D-BU | 47 | Trailer Auxiliary Supply Voltage | I | - |
| 49 | - | - | - | Not Occupied | - | - |
| 50 | 0.35 | VT/YE | 43 | Accessory Voltage | I | - |

| | | | | | | |
|---|---|---|---|---|---|---|
| 50 | 0.35 | VT/YE | 43 | Accessory Voltage | I | - |

## X61A Junction Block - Instrument Panel X3

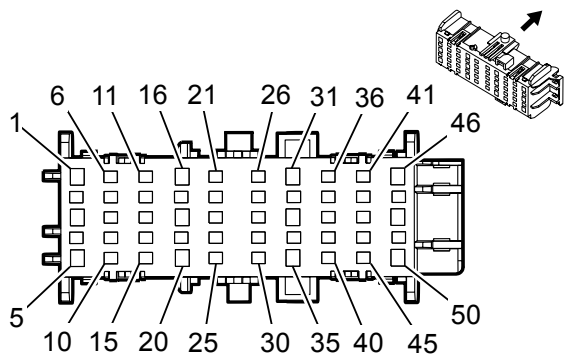


### Connector Part Information

Harness Type: Headliner

OEM Connector: 15501745

Service Connector: Not Available

Description: 50-Way F 1.5, 2.8 OCS Series (BU)

### *Terminal Part Information*

| Terminal Type ID | Terminated Lead | Diagnostic Test Probe | Terminal Removal Tool | Service Terminal | Tray | Core Crimp | Insulation Crimp |
|---|---|---|---|---|---|---|---|
| I | Not Available | Not Available | Not Available | Not Available | Not Available | Not Available | Not Available |
| II | Not Available | J-35616-2A (GY) | J-38125-11A | 7116-4100-08 | 9 | E | C |

### *X61A Junction Block - Instrument Panel X3*

| Pin | Size | Color | Circuit | Function | Terminal Type ID | Option |
|---|---|---|---|---|---|---|
| 1-2 | - | - | - | Not Occupied | - | - |
| 3 | 0.5 | RD/L-GN | 3140 | Battery Positive Voltage | I | - |
| 4 | 0.35 | D-BU | 2307 | Passenger Air Bag On Indicator Control | I | - |
| 5-6 | - | - | - | Not Occupied | - | - |
| 7 | 0.75 | WH/VT | 1430 | Exterior Courtesy Lamp Supply Voltage | I | - |
| 8 | 0.35 | YE/WH | 1690 | Automatic Day/Night Mirror Signal | I | - |
| 9 | 0.35 | BK/YE | 1691 | Automatic Day/Night Mirror Low Reference | I | - |
| 10-12 | - | - | - | Not Occupied | - | - |
| 13 | 0.5<br>0.5 | L-GN/WH<br>L-GN/RD | 24<br>24 | Backup Lamp Supply Voltage<br>Backup Lamp Supply Voltage | I | - |
| 14-16 | - | - | - | Not Occupied | - | - |
| 17 | 0.35 | L-GN/BK | 2515 | Keypad Supply Voltage | I | - |
| 18 | - | - | - | Not Occupied | - | - |
| 19 | 0.35 | VT/WH | 5234 | Passenger Seat Belt Indicator | I | - |
| 20 | - | - | - | Not Occupied | - | - |

| | | | | | | |
|---|---|---|---|---|---|---|
| 20 | - | - | - | Not Occupied | - | - |
| 21 | 0.35<br>0.35 | L-GN/WH<br>L-GN/D-BU | 2514<br>2514 | Keypad Signal<br>Keypad Signal | I | - |
| 22 | 0.35<br>0.35 | YE/VT<br>YE/BN | 2516<br>2516 | Keypad Green LED<br>Keypad Green LED | I | - |
| 23 | - | - | - | Not Occupied | - | - |
| 24 | 0.35<br>0.35 | L-GN<br>L-GN/RD | 2308<br>2308 | Passenger Air Bag Off Indicator Control<br>Passenger Air Bag Off Indicator Control | I | - |
| 25 | 0.5 | WH/BN | 6815 | Inadvertent Power Control | I | - |
| 26 | 0.35 | WH | 6192 | Power Sliding Window Switch Close Signal | I | - |
| 27 | 0.5 | YE | 6817 | LED Backlight Dimming Control | I | - |
| 28 | 0.35<br>0.35 | GY<br>GY/D-BU | 156<br>156 | Courtesy Lamp Switch Signal<br>Courtesy Lamp Switch Signal | I | - |
| 29 | 0.5 | GY | 157 | Interior Lamp Control | I | - |
| 30-31 | - | - | - | Not Occupied | - | - |
| 32 | 0.35 | YE/VT | 6191 | Power Sliding Window Switch Open Signal | I | - |
| 33-34 | - | - | - | Not Occupied | - | - |
| 35 | 0.5 | VT/GY | 1054 | Stop Lamp Supply Voltage | I | - |
| 36 | 0.35 | BN/WH | 2517 | Keypad Red LED | I | - |
| 37-40 | - | - | - | Not Occupied | - | - |
| 41 | 0.35 | GY/L-GN | 328 | Interior Lamp Defeat Switch Signal | I | - |
| 42 | 0.35 | VT/L-GN | 7558 | LED Ambient Lighting Control 2 | I | - |
| 43-44 | - | - | - | Not Occupied | - | - |
| 45 | 0.35 | GY/WH | 3153 | Lane Departure Warning Disable Switch Signal | I | - |
| 46 | 2.5 | BK | 1050 | Ground | I | - |
| 47 | 0.35 | L-GN | 5060 | Low Speed GMLAN Serial Data | I | - |
| 48 | - | - | - | Not Occupied | - | - |
| 49 | 0.35 | WH | 3152 | Lane Departure Warning Indicator Control | I | - |
| 50 | - | - | - | Not Occupied | - | - |

## X61A Junction Block - Instrument Panel X4

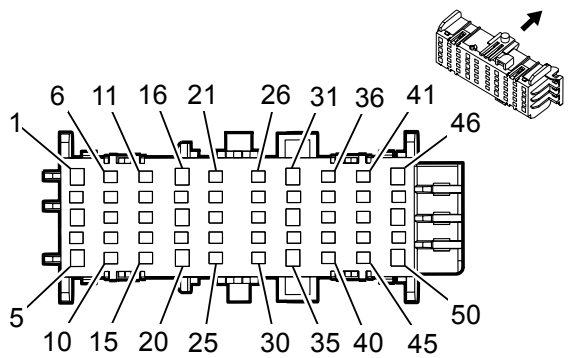


### Connector Part Information

Harness Type: Instrument Panel

OEM Connector: 15501744

Service Connector: Pending

Description: 50-Way F 1.5, 2.8 OCS Series (GN)

### *Terminal Part Information*

| Terminal Type ID | Terminated Lead | Diagnostic Test Probe | Terminal Removal Tool | Service Terminal | Tray | Core Crimp | Insulation Crimp |
|---|---|---|---|---|---|---|---|
| I | Pending | Pending | Pending | Not Available | Not Available | Not Available | Not Available |
| II | Pending | J-35616-35 (VT) | J-38125-12A | 1326030-8 | 17 | A | 4 |

### *X61A Junction Block - Instrument Panel X4*

| Pin | Size | Color | Circuit | Function | Terminal Type ID | Option |
|---|---|---|---|---|---|---|
| 1 | - | - | - | Not Occupied | - | - |
| 2 | 0.35 | YE/VT | 2516 | Keypad Green LED | I | - |
| 3 | 0.35 | BK/L-GN | 552 | Sensor Low Reference | I | - |
| 4 | 0.5 | WH | 2501 | High Speed GMLAN Serial Data (-) (1) | I | - |
| 5 | 0.5 | D-BU | 2500 | High Speed GMLAN Serial Data (+) (1) | I | - |
| 6 | 0.5 | YE | 6817 | LED Backlight Dimming Control | I | - |
| 7 | 0.35 | L-GN/WH | 2514 | Keypad Signal | I | - |
| 8 | 0.35 | GY/RD | 598 | 5 Volt Reference | I | - |
| 9 | 0.35 | WH/L-GN | 526 | Stop Lamp Switch Signal | I | - |
| 10 | 0.35 | D-BU/YE | 1693 | Four Wheel Drive Switch Signal | I | - |
| 11 | 0.35 | GY/WH | 3153 | Lane Departure Warning Disable Switch Signal | I | - |
| 12 | 0.35 | YE/VT | 6191 | Power Sliding Window Switch Open Signal | I | - |
| 13 | 0.35 | WH | 6192 | Power Sliding Window Switch Close Signal | I | - |
| 14 | 0.35 | BN | 1560 | Neutral Indicator Control | I | - |

| | | | | | | |
|---|---|---|---|---|---|---|
| 15 | 0.35 | GY/RD | 6029 | Four Wheel Drive Mode Switch 5 Volt Reference | I | - |
| 16 | 2.5 | BK | 1050 | Ground | I | - |
| 17-18 | - | - | - | Not Occupied | - | - |
| 19 | 0.35 | L-GN/BK | 2515 | Keypad Supply Voltage | I | - |
| 20 | - | - | - | Not Occupied | - | - |
| 21 | 0.5 | VT/L-GN | 7558 | LED Ambient Lighting Control 2 | I | - |
| 22 | 0.35 | BN/WH | 2517 | Keypad Red LED | I | - |
| 23 | 0.35 | BN/BK | 1566 | 4 HI Indicator Control | I | - |
| 24 | 0.35 | VT/WH | 1565 | 4 LO Indicator Control | I | - |
| 25 | 0.35 | VT/L-GN | 1739 | Run/Crank Ignition 1 Voltage | I | - |
| 26 | 0.35 | WH | 3152 | Lane Departure Warning Indicator Control | I | - |
| 27 | 0.35 | GY/L-GN | 328 | Interior Lamp Defeat Switch Signal | I | - |
| 28-29 | - | - | - | Not Occupied | - | - |
| 30 | 0.35 | GY/L-GN | 1561 | AWD Indicator Control | I | - |
| 31 | 1.5 | RD/YE | 2340 | Battery Positive Voltage | II | - |
| 32 | 0.5 | BK/WH | 1851 | Signal Ground | I | - |
| 33 | 0.75<br>0.35 | BK/WH<br>BK/WH | 1851<br>1851 | Signal Ground<br>Signal Ground | I | - |
| 34 | - | - | - | Not Occupied | - | - |
| 35 | 2.5 | BK/WH | 1851 | Signal Ground | I | - |
| 36-37 | - | - | - | Not Occupied | - | - |
| 38 | 0.5 | BK/WH | 1851 | Signal Ground | I | - |
| 39 | - | - | - | Not Occupied | - | - |
| 40 | 0.35 | L-GN/BK | 1563 | 2 HI Indicator Control | I | - |
| 41 | 0.35 | BK/WH | 1851 | Signal Ground | I | - |
| 42-44 | - | - | - | Not Occupied | - | - |
| 45 | 0.35 | BK | 2550 | Ground | I | - |
| 46 | 0.75 | BK | 2550 | Ground | I | - |
| 47 | 0.35 | BK | 2550 | Ground | I | - |
| 48 | 0.75 | BK | 2550 | Ground | I | - |
| 49 | - | - | - | Not Occupied | - | - |

| | | | | | | |
|---|---|---|---|---|---|---|
| 50 | 0.75 | BK | 2550 | Ground | I | - |

## X61A Junction Block - Instrument Panel X5

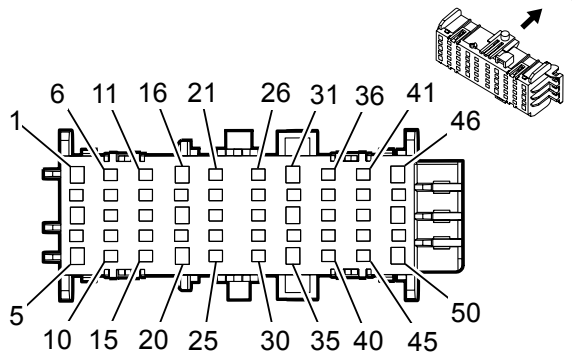


### Connector Part Information

Harness Type: Instrument Panel

OEM Connector: 15501743

Service Connector: Pending

Description: 50-Way F 1.5, 2.8 OCS Series (NA)

### *Terminal Part Information*

| Terminal Type ID | Terminated Lead | Diagnostic Test Probe | Terminal Removal Tool | Service Terminal | Tray | Core Crimp | Insulation Crimp |
|---|---|---|---|---|---|---|---|
| I | Pending | Pending | Pending | Not Available | Not Available | Not Available | Not Available |

### *X61A Junction Block - Instrument Panel X5*

| Pin | Size | Color | Circuit | Function | Terminal Type ID | Option |
|---|---|---|---|---|---|---|
| 1 | 0.5 | WH | 6106 | High Speed GMLAN Serial Data (-) (2) | I | - |
| 2 | 0.5 | D-BU/YE | 6105 | High Speed GMLAN Serial Data (+) (2) | I | - |
| 3 | 0.5 | D-BU/YE | 6105 | High Speed GMLAN Serial Data (+) (2) | I | - |
| 4 | 0.75 | WH/VT | 1430 | Exterior Courtesy Lamp Supply Voltage | I | - |
| 5 | - | - | - | Not Occupied | - | - |
| 6 | 0.35 | GY | 5697 | Child Lockout Indicator | I | - |
| 7 | 0.5 | BN | 7634 | Integrated Trailer Brake Contoller Redundant Manual Apply Signal | I | - |
| 8 | 0.35 | BN/YE | 780 | Driver Door Lock Switch Lock Signal | I | - |
| 9 | 0.35 | VT | 185 | Low Washer Fluid Indicator Control | I | - |
| 10 | 0.5 | D-BU/L-GN | 961 | | I | - |
| 11 | 0.5 | D-BU/L-GN | 963 | | I | - |
| 12 | 0.5 | YE | 7635 | Integrated Trailer Brake Controller Manual Apply Signal | I | - |
| 13 | 0.35 | BN/WH | 781 | Driver Door Lock Switch Unlock Signal | I | - |
| 14 | 0.5 | BK/BN | 7631 | Integrated Trailer Brake Controller Switch Low Reference | I | - |
| 15 | 0.5 | D-BU/RD | 7632 | Integrated Trailer Brake Controller Switch 5 Volt Reference | I | - |

| | | | | | | |
|---|---|---|---|---|---|---|
| 16 | - | - | - | Not Occupied | - | - |
| 17 | 0.5 | D-BU/L-GN | 962 | | I | - |
| 18 | 0.5 | VT/BN | 300 | Run Ignition 3 Voltage | I | - |
| 19 | 0.5 | WH | 6106 | High Speed GMLAN Serial Data (-) (2) | I | - |
| 20-21 | - | - | - | Not Occupied | - | - |
| 22 | 0.5 | D-BU/VT | 1134 | Park Brake Switch Signal | I | - |
| 23 | 0.5 | D-BU/L-GN | 964 | | I | - |
| 24 | - | - | - | Not Occupied | - | - |
| 25 | 0.35 | WH/GY | 5285 | Adjustable Pedal Switch Rearward Signal | I | - |
| 26 | 0.35 | L-GN/BN | 5852 | Rear Park Assist LED Disable Signal | I | - |
| 27 | 0.5 | WH/D-BU | 3691 | Trailer Brake Apply Signal | I | - |
| 28 | - | - | - | Not Occupied | - | - |
| 29 | 0.35 | L-GN/GY | 5286 | Adjustable Pedal Switch Forward Signal | I | - |
| 30 | 0.5 | L-GN/BK | 7633 | Integrated Trailer Brake Controller User Gain Signal | I | - |
| 31 | - | - | - | Not Occupied | - | - |
| 32 | 0.5 | YE/WH | 816 | Brake Transmission Shift Interlock Solenoid Control | I | - |
| 33 | - | - | - | Not Occupied | - | - |
| 34 | 0.5 | WH | 6816 | Indicator Dimming Control | I | - |
| 35-36 | - | - | - | Not Occupied | - | - |
| 37 | 0.35 | WH | 6816 | Indicator Dimming Control | I | - |
| 38 | 0.35 | WH | 6816 | Indicator Dimming Control | I | - |
| 39-44 | - | - | - | Not Occupied | - | - |
| 45 | 0.35 | GY/L-GN | 2555 | Rear Park Assist Disable Signal | I | - |
| 46-50 | - | - | - | Not Occupied | - | - |

## X61A Junction Block - Instrument Panel X6

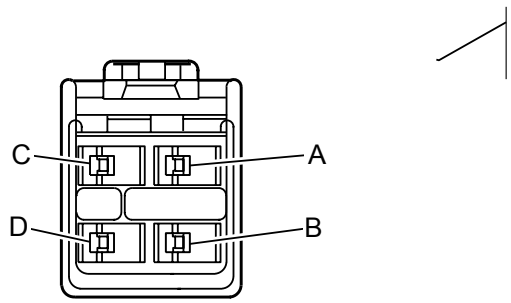


### Connector Part Information

Harness Type: Trailer Jumper

OEM Connector: 12194033

Service Connector: Service by Harness - See Part Catalog

Description: 4-Way F 280 Metri Pack Series, Flexlock (CR)

### *Terminal Part Information*

| Terminal Type ID | Terminated Lead | Diagnostic Test Probe | Terminal Removal Tool | Service Terminal | Tray | Core Crimp | Insulation Crimp |
|---|---|---|---|---|---|---|---|
| I | 13581349 | J-35616-4A (PU) | J-38125-553 | 12110844 | 4 | E | A |
| II | 13581348 | J-35616-4A (PU) | J-38125-553 | 12110842 | 4 | A | B |

### *X61A Junction Block - Instrument Panel X6*

| Pin | Size | Color | Circuit | Function | Terminal Type ID | Option |
|---|---|---|---|---|---|---|
| A | 0.5 | BK | 1050 | Ground | I | - |
| B | 0.5 | WH/D-BU | 3691 | Trailer Brake Apply Signal | I | - |
| C | 2.5 | RD/L-GN | 242 | Battery Positive Voltage | II | - |
| D | 2.5 | D-BU | 47 | Trailer Auxiliary Supply Voltage | II | - |

## X61A Junction Block - Instrument Panel X8

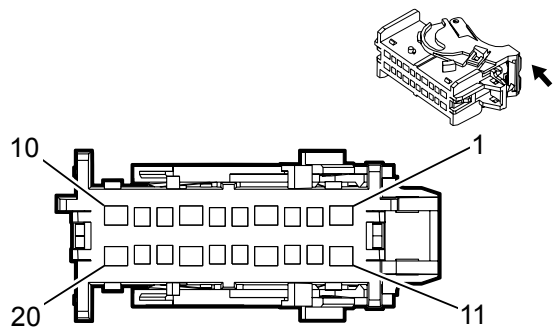


### Connector Part Information

Harness Type: Brake Clutch Jumper

OEM Connector: 13924034

Service Connector: Service by Harness - See Part Catalog

Description: 20-Way F 1.5, 2.8 Series (BK)

### *Terminal Part Information*

| Terminal Type ID | Terminated Lead | Diagnostic Test Probe | Terminal Removal Tool | Service Terminal | Tray | Core Crimp | Insulation Crimp |
|---|---|---|---|---|---|---|---|
| I | Pending | Pending | Pending | Not Available | Not Available | Not Available | Not Available |

### *X61A Junction Block - Instrument Panel X8*

| Pin | Size | Color | Circuit | Function | Terminal Type ID | Option |
|---|---|---|---|---|---|---|
| 1-7 | - | - | - | Not Occupied | - | - |
| 8 | 0.5 | WH/L-GN | 526 | Stop Lamp Switch Signal | I | - |
| 9 | 0.5 | WH | 2501 | High Speed GMLAN Serial Data (-) (1) | I | - |
| 10 | 0.5 | D-BU | 2500 | High Speed GMLAN Serial Data (+) (1) | I | - |
| 11 | - | - | - | Not Occupied | - | - |
| 12 | 0.5 | WH | 2501 | High Speed GMLAN Serial Data (-) (1) | I | - |
| 13 | 0.5 | D-BU | 2500 | High Speed GMLAN Serial Data (+) (1) | I | - |
| 14 | 0.5 | WH/RD | 6207 | Memory Sensor High Reference | I | - |
| 15 | 0.5 | D-BU | 5952 | Adjustable Pedal Position Sensor Brake Signal | I | - |
| 16 | 1.5 | YE | 5129 | Adjustable Pedal Actuator Rearward Control | I | - |
| 17 | 0.5 | BK/GY | 6206 | Memory Sensor Low Reference | I | - |
| 18 | 1.5 | L-GN/VT | 5130 | Adjustable Pedal Actuator Forward Control | I | - |
| 19 | 0.5 | BK/L-GN | 552 | Sensor Low Reference | I | - |
| 20 | 0.5 | GY/RD | 598 | 5 Volt Reference | I | - |

## X61A Junction Block - Instrument Panel X9

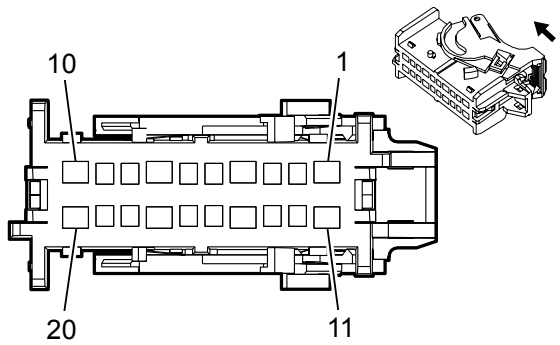


### Connector Part Information

Harness Type: Brake Clutch Jumper

OEM Connector: 13924035

Service Connector: Service by Harness - See Part Catalog

Description: 20-Way F 1.5, 2.8 OCS Series (GY)

### *Terminal Part Information*

| Terminal Type ID | Terminated Lead | Diagnostic Test Probe | Terminal Removal Tool | Service Terminal | Tray | Core Crimp | Insulation Crimp |
|---|---|---|---|---|---|---|---|
| I | Pending | Pending | Pending | Not Available | Not Available | Not Available | Not Available |
| II | Pending | J-35616-35 (VT) | J-38125-12A | 1326030-8 | 17 | B | F |

### *X61A Junction Block - Instrument Panel X9*

| Pin | Size | Color | Circuit | Function | Terminal Type ID | Option |
|---|---|---|---|---|---|---|
| 1 | 2.5 | YE/BN | 1569 | Transfer Case Lock Solenoid Control | I | - |
| 2 | 0.35 | D-BU/YE | 1693 | Four Wheel Drive Switch Signal | I | - |
| 3 | 0.35 | GY/RD | 6029 | Four Wheel Drive Mode Switch 5 Volt Reference | I | - |
| 4 | 0.35 | BN/BK | 1566 | 4 HI Indicator Control | I | - |
| 5 | 0.35 | VT/WH | 1565 | 4 LO Indicator Control | I | - |
| 6 | 0.35 | VT/L-GN | 1739 | Run/Crank Ignition 1 Voltage | I | - |
| 7 | 0.35 | VT/YE | 5985 | Accessory Wakeup Serial Data | I | - |
| 8 | 0.35 | L-GN/BK | 1563 | 2 HI Indicator Control | I | - |
| 9 | 0.35 | GY/L-GN | 1561 | AWD Indicator Control | I | - |
| 10 | 0.5 | GY/BK | 1570 | Front Axle Actuator Control | I | - |
| 11 | 3 | RD/GY | 1342 | Battery Positive Voltage | I | - |
| 12 | 0.35 | BN | 1560 | Neutral Indicator Control | I | - |
| 13 | 0.35 | VT | 7476 | Incremental Encoder Sensor Return | I | - |
| 14 | 3 | BK | 550 | Ground | I | - |

| | | | | | | |
|---|---|---|---|---|---|---|
| 15 | 0.35 | D-BU/GY | 7473 | Incremental Encoder Impulse Signal | I | - |
| 16 | 0.35 | YE | 7474 | Incremental Encoder Direction Signal | I | - |
| 17 | 4 | YE/VT | 1553 | Transfer Case Motor Counter Clockwise Control | II | - |
| 18 | 0.35 | WH/L-GN | 7475 | Incremental Encoder Sensor (8V) Supply | I | - |
| 19 | 0.5 | YE/WH | 1695 | Four Wheel Drive Wheel Lock Indicator | I | - |
| 20 | 4 | YE/GY | 1552 | Transfer Case Motor Clockwise Control | II | - |

## X63A Junction Block - Rear Body X1

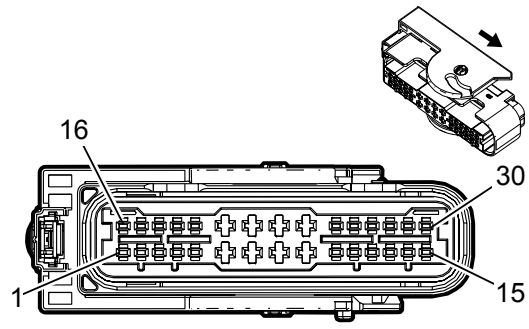


### Connector Part Information

Harness Type: Chassis

OEM Connector: 13988318

Service Connector: Service by Harness - See Part Catalog

Description: 30-Way F 1.5, 2.8 Series, Sealed (BK)

### *Terminal Part Information*

| Terminal Type ID | Terminated Lead | Diagnostic Test Probe | Terminal Removal Tool | Service Terminal | Tray | Core Crimp | Insulation Crimp |
|---|---|---|---|---|---|---|---|
| I | Pending | Pending | Pending | Not Available | Not Available | Not Available | Not Available |
| II | Pending | J-35616-35 (VT) | J-38125-557 | 1-968857-3 | 7 | Not Available | Not Available |
| III | Pending | J-35616-35 (VT) | J-38125-557 | 1-968857-3 | 7 | C | 1 |

### *X63A Junction Block - Rear Body X1*

| Pin | Size | Color | Circuit | Function | Terminal Type ID | Option |
|---|---|---|---|---|---|---|
| 1 | 0.5 | YE/VT | 2378 | Right Rear Corner Object Sensor Signal | I | - |
| 2 | 0.5 | YE/WH | 2377 | Right Rear Middle Object Sensor Signal | I | - |
| 3 | 0.5 | YE/D-BU | 2376 | Left Rear Middle Object Sensor Signal | I | - |
| 4 | 0.5 | YE | 2375 | Left Rear Corner Object Sensor Signal | I | - |
| 5 | 0.5 | BN/WH | 2374 | Object Sensor Supply Voltage | I | - |
| 6 | 1.5 | BK | 1750 | Ground | III | - |
| 7 | 1.5 | BK | 2150 | Ground | III | - |
| 8 | - | - | - | Not Occupied | - | - |
| 9 | 0.75 | L-GN/WH | 24 | Backup Lamp Supply Voltage | II | - |
| 10 | 0.75 | WH/VT | 1430 | Exterior Courtesy Lamp Supply Voltage | I | - |
| 11-12 | - | - | - | Not Occupied | - | - |
| 13 | 0.5 | VT/GY | 1054 | Stop Lamp Supply Voltage | I | - |
| 14-15 | - | - | - | Not Occupied | - | - |

| | | | | | | |
|---|---|---|---|---|---|---|
| 16 | 0.5 | L-GN/YE | 6846 | Rear License Lamp Supply Voltage | I | - |
| 17 | 0.5 | BK/GY | 2379 | Object Sensor Low Reference | I | - |
| 18 | 0.75 | YE/D-BU | 18 | Left Rear Stop/Turn Lamp Supply Voltage | I | - |
| 19 | 0.75 | BN/L-GN | 19 | Right Rear Stop/Turn Lamp Supply Voltage | I | - |
| 20 | - | - | - | Not Occupied | - | - |
| 21 | 0.75 | GY/BN | 309 | Right Park Lamp Supply Voltage | II | - |
| 22 | 0.75 | VT/GY | 709 | Left Park Lamp Supply Voltage | II | - |
| 23 | - | - | - | Not Occupied | - | - |
| 24 | 1 | BK | 1750 | Ground | II | - |
| 25 | 0.5 | L-GN/WH | 24 | Backup Lamp Supply Voltage | I | - |
| 26 | 0.5 | VT/L-GN | 1739 | Run/Crank Ignition 1 Voltage | I | - |
| 27 | 0.5 | GY/YE | 6972 | Camera Signal #2 + | I | - |
| 28 | 0.5 | WH/D-BU | 6973 | Camera Signal #2 | I | - |
| 29 | 0.5 | BK | 2550 | Ground | I | - |
| 30 | 0.5 | BK | 6974 | Camera Drain Wire | I | - |

## X63A Junction Block - Rear Body X3

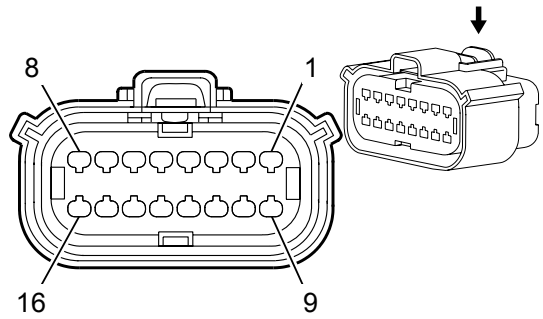


### Connector Part Information

Harness Type: License Lamp Jumper

OEM Connector: 13778557

Service Connector: 13584788

Description: 16-Way F 1.5 Series, Sealed (BK)

Harness Type: Rear Bumper

OEM Connector: 13778557

Service Connector: 13584788

Description: 16-Way F 1.5 Series, Sealed (BK)

### *Terminal Part Information*

| Terminal Type ID | Terminated Lead | Diagnostic Test Probe | Terminal Removal Tool | Service Terminal | Tray | Core Crimp | Insulation Crimp |
|---|---|---|---|---|---|---|---|
| I | Pending | J-35616-14 (GN) | J-38125-217 | Not Available | Not Available | E | 2 |

### *X63A Junction Block - Rear Body X3*

| Pin | Size | Color | Circuit | Function | Terminal Type ID | Option |
|---|---|---|---|---|---|---|
| 1 | 0.5 | BK/GY | 2379 | Object Sensor Low Reference | I | - |
| 2 | 0.5 | VT/GY | 709 | Left Park Lamp Supply Voltage | I | - |
| 3-4 | - | - | - | Not Occupied | - | - |
| 5 | 0.5 | BK | 1750 | Ground | I | - |
| 6 | 0.5 | BK | 1750 | Ground | I | - |
| 7 | 0.5 | BK | 1750 | Ground | I | - |
| 8 | 0.5 | BK | 1750 | Ground | I | - |
| 9 | 0.5 | L-GN/YE | 6846 | Rear License Lamp Supply Voltage | I | - |
| 10 | 0.5 | L-GN/YE | 6846 | Rear License Lamp Supply Voltage | I | - |
| 11 | 0.5 | GY/BN | 309 | Right Park Lamp Supply Voltage | I | - |
| 12 | 0.5 | YE/VT | 2378 | Right Rear Corner Object Sensor Signal | I | - |
| 13 | 0.5 | YE/WH | 2377 | Right Rear Middle Object Sensor Signal | I | - |
| 14 | 0.5 | YE/D-BU | 2376 | Left Rear Middle Object Sensor Signal | I | - |

| | | | | | | |
|---|---|---|---|---|---|---|
| 14 | 0.5 | YE/D-BU | 2376 | Left Rear Middle Object Sensor Signal | I | - |
| 15 | 0.5 | YE | 2375 | Left Rear Corner Object Sensor Signal | I | - |
| 16 | 0.5 | BN/WH | 2374 | Object Sensor Supply Voltage | I | - |

## X63A Junction Block - Rear Body X6

### Connector Part Information

Harness Type:

OEM Connector: 13581768

Service Connector: Service by Harness - See Part Catalog

Description: 8 F

### *Terminal Part Information*

| Terminal Type ID | Terminated Lead | Diagnostic Test Probe | Terminal Removal Tool | Service Terminal | Tray | Core Crimp | Insulation Crimp |
|---|---|---|---|---|---|---|---|
| I | Not Available | Not Available | Not Available | Not Available | Not Available | Not Available | Not Available |

### *X63A Junction Block - Rear Body X6*

| Pin | Size | Color | Circuit | Function | Terminal Type ID | Option |
|---|---|---|---|---|---|---|
| 1-3 | - | - | - | Not Occupied | - | - |
| 4 | 0.5 | RD | 1430 | Exterior Courtesy Lamp Supply Voltage | I | - |
| 5-6 | - | - | - | Not Occupied | - | - |
| 7 | 0.5 | BK | 1750 | Ground | I | - |
| 8 | - | - | - | Not Occupied | - | - |

## Component Connector End Views

### A6D Fuel Pump and Level Sensor Assembly - Secondary

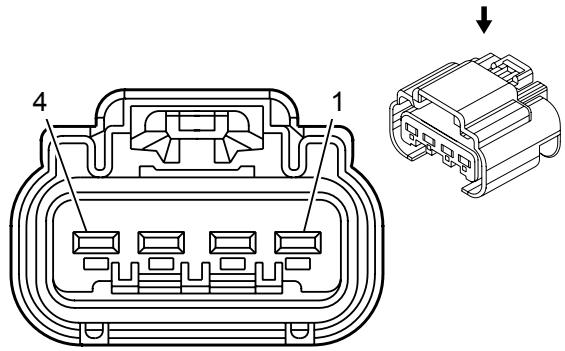


### Connector Part Information

Harness Type: Chassis

OEM Connector: 13527865

Service Connector: 13587174

Description: 4-Way F 280 GT Series, Sealed (NA)

### *Terminal Part Information*

| Terminal Type ID | Terminated Lead | Diagnostic Test Probe | Terminal Removal Tool | Service Terminal | Tray | Core Crimp | Insulation Crimp |
|---|---|---|---|---|---|---|---|
| I | 13575408 | J-35616-4A (PU) | J-38125-553 | 15392777 | 23 | D | 5 |
| II | 13575392 | J-35616-4A (PU) | J-38125-553 | 15304720 | 19 | 4 | 5 |
| III | 13575402 | J-35616-4A (PU) | J-38125-553 | 15392777 | 23 | B | 5 |
| IV | 13576356 | J-35616-4A (PU) | J-38125-553 | 15304719 | 19 | E | 5 |

### *A6D Fuel Pump and Level Sensor Assembly - Secondary*

| Pin | Size | Color | Circuit | Function | Terminal Type ID | Option |
|---|---|---|---|---|---|---|
| 1 | 2.5<br>1.5 | GY<br>GY | 120<br>120 | Fuel Pump Supply Voltage<br>Fuel Pump Supply Voltage | I | - |
| 2 | 4 | BK | 2150 | Ground | III | - |
| 3 | 0.5 | BK/L-GN | 6281 | Fuel Level Sensor Low Reference | IV | - |
| 4 | 0.5<br>0.5 | D-BU/WH<br>D-BU/VT | 1937<br>1589 | Secondary Fuel Level Sensor Signal<br>Primary Fuel Level Sensor Signal | IV | - |

## A7 Fuel Pump and Level Sensor Assembly

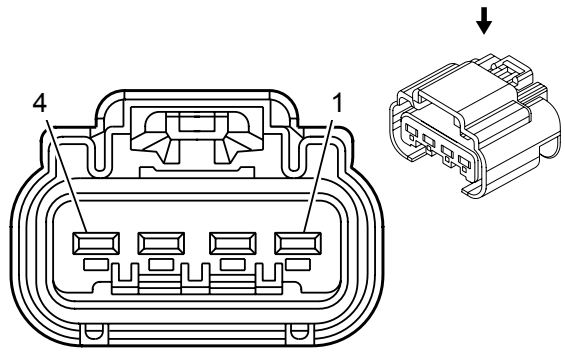


### Connector Part Information

Harness Type: Chassis

OEM Connector: 13527865

Service Connector: 13587174

Description: 4-Way F 280 GT Series, Sealed (NA)

### *Terminal Part Information*

| Terminal Type ID | Terminated Lead | Diagnostic Test Probe | Terminal Removal Tool | Service Terminal | Tray | Core Crimp | Insulation Crimp |
|---|---|---|---|---|---|---|---|
| I | 13575392 | J-35616-4A (PU) | J-38125-553 | 15304720 | 19 | 4 | 5 |
| II | 13576356 | J-35616-4A (PU) | J-38125-553 | 15304719 | 19 | E | 5 |

### *A7 Fuel Pump and Level Sensor Assembly*

| Pin | Size | Color | Circuit | Function | Terminal Type ID | Option |
|---|---|---|---|---|---|---|
| 1 | 1.5 | GY | 120 | Fuel Pump Supply Voltage | I | - |
| 2 | 1.5 | BK | 2150 | Ground | I | - |
| 3 | 0.5 | BK/L-GN | 6281 | Fuel Level Sensor Low Reference | II | - |
| 4 | 0.5 | D-BU/VT | 1589 | Primary Fuel Level Sensor Signal | II | - |

## A10 Inside Rearview Mirror

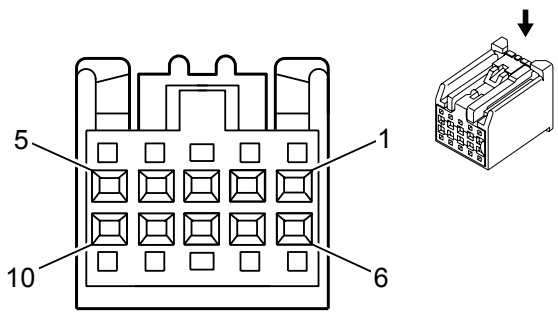


### Connector Part Information

Harness Type: Headliner

OEM Connector: 13815336

Service Connector: 13577390

Description: 10-Way F 0.64 Kaizen Series (BK)

### *Terminal Part Information*

| Terminal Type ID | Terminated Lead | Diagnostic Test Probe | Terminal Removal Tool | Service Terminal | Tray | Core Crimp | Insulation Crimp |
|---|---|---|---|---|---|---|---|
| I | 13327120 | J-35616-64B (L-BU) | J-38125-215A | SAIT-A03T-M064 | 14 | P | P |

### *A10 Inside Rearview Mirror*

| Pin | Size | Color | Circuit | Function | Terminal Type ID | Option |
|---|---|---|---|---|---|---|
| 1 | 0.5<br>0.5 | L-GN/WH<br>L-GN/RD | 24<br>24 | Backup Lamp Supply Voltage<br>Backup Lamp Supply Voltage | I | - |
| 2 | 0.35 | VT/L-GN | 1739 | Run/Crank Ignition 1 Voltage | I | - |
| 3 | 0.35<br>0.35 | L-GN/WH<br>L-GN/D-BU | 2514<br>2514 | Keypad Signal<br>Keypad Signal | I | - |
| 4 | 0.35 | L-GN/BK | 2515 | Keypad Supply Voltage | I | - |
| 5 | 0.5 | BK | 1050 | Ground | I | - |
| 6 | 0.35<br>0.35 | YE/VT<br>YE/BN | 2516<br>2516 | Keypad Green LED<br>Keypad Green LED | I | - |
| 7 | 0.35 | BN/WH | 2517 | Keypad Red LED | I | - |
| 8 | 0.35 | BK/YE | 1691 | Automatic Day/Night Mirror Low Reference | I | - |
| 9 | 0.35 | YE/WH | 1690 | Automatic Day/Night Mirror Signal | I | - |
| 10 | - | - | - | Not Occupied | - | - |

## A11 Radio X1

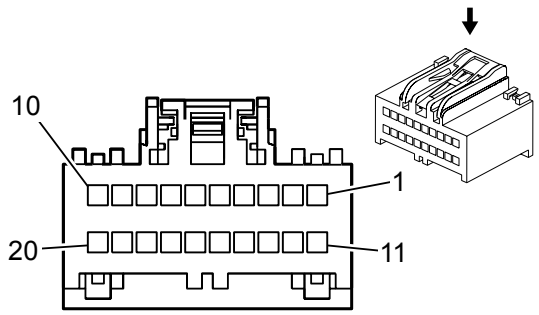


### Connector Part Information

Harness Type: Instrument Panel

OEM Connector: 15491304

Service Connector: 15126710

Description: 20-Way F USCAR 64  Series (GY)

### *Terminal Part Information*

| Terminal Type ID | Terminated Lead | Diagnostic Test Probe | Terminal Removal Tool | Service Terminal | Tray | Core Crimp | Insulation Crimp |
|---|---|---|---|---|---|---|---|
| I | 13327120 | J-35616-64B (L-BU) | J-38125-215A | SAIT-A03T-M064 | 14 | P | P |

### *A11 Radio X1*

| Pin | Size | Color | Circuit | Function | Terminal Type ID | Option |
|---|---|---|---|---|---|---|
| 1-5 | - | - | - | Not Occupied | - | - |
| 6 | 0.5 | BARE | 5842 | Auxiliary Audio Screen (2) | I | - |
| 7 | 0.35 | D-BU | 2060 | Auxiliary Detection Signal | I | - |
| 8 | 0.35 | VT | 5843 | Auxiliary Audio Common Signal | I | - |
| 9 | 0.35 | GY | 5839 | Left Auxiliary Audio Signal (2) | I | - |
| 10 | 0.35 | L-GN | 5841 | Right Auxiliary Audio Signal (2) | I | - |
| 11-12 | - | - | - | Not Occupied | - | - |
| 13 | 0.5 | L-GN/D-BU | 7532 | Linear Interconnect Network Bus 10 | I | - |
| 14 | 0.5 | L-GN | 5060 | Low Speed GMLAN Serial Data | I | - |
| 15-18 | - | - | - | Not Occupied | - | - |
| 19 | 0.35 | BK/YE | 659 | Cellular Telephone Voice Low Reference | I | - |
| 20 | 0.35 | YE | 658 | Cellular Telephone Voice Signal | I | - |

## A11 Radio X2

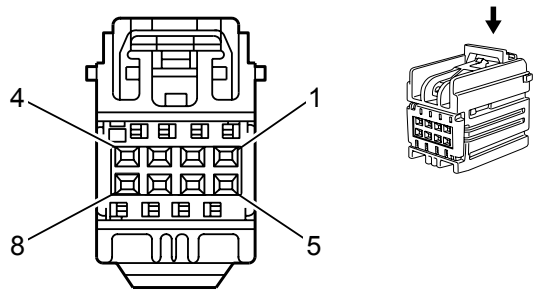


### Connector Part Information

Harness Type: Instrument Panel

OEM Connector: 13551679

Service Connector: 19115653

Description: 8-Way F YESC Kaizen Series (L-GY)

### *Terminal Part Information*

| Terminal Type ID | Terminated Lead | Diagnostic Test Probe | Terminal Removal Tool | Service Terminal | Tray | Core Crimp | Insulation Crimp |
|---|---|---|---|---|---|---|---|
| I | 13327120 | J-35616-64B (L-BU) | J-38125-215A | SAIT-A03T-M064 | 14 | P | P |

### *A11 Radio X2*

| Pin | Size | Color | Circuit | Function | Terminal Type ID | Option |
|---|---|---|---|---|---|---|
| 1 | 0.5 | WH/L-GN | 3997 | MOST Serial Data (-) | I | - |
| 2 | 0.5 | GY/VT | 3998 | MOST Serial Data (+) | I | - |
| 3 | 0.5 | WH/L-GN | 3997 | MOST Serial Data (-) | I | - |
| 4 | 0.5 | GY/VT | 3998 | MOST Serial Data (+) | I | - |
| 5-6 | - | - | - | Not Occupied | - | - |
| 7 | 0.35 | WH/VT | 3999 | MOST Control | I | - |
| 8 | - | - | - | Not Occupied | - | - |

## A11 Radio X3

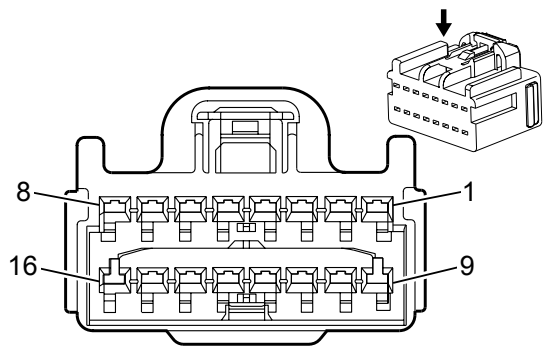


### Connector Part Information

Harness Type: Instrument Panel

OEM Connector: 10847013

Service Connector: 89047090

Description: 16-Way F Kaizen YESC Series (GN)

### *Terminal Part Information*

| Terminal Type ID | Terminated Lead | Diagnostic Test Probe | Terminal Removal Tool | Service Terminal | Tray | Core Crimp | Insulation Crimp |
|---|---|---|---|---|---|---|---|
| I | Pending | J-35616-14 (GN) | J-38125-217 | Not Available | Not Available | A/E | A/C |
| II | Pending | J-35616-14 (GN) | J-38125-217 | Not Available | Not Available | E | 2 |

### *A11 Radio X3*

| Pin | Size | Color | Circuit | Function | Terminal Type ID | Option |
|---|---|---|---|---|---|---|
| 1 | 0.75 | D-BU | 201 | Left Front Speaker (+) (1) | I | - |
| 2 | 0.75 | YE | 200 | Right Front Speaker (+) (1) | I | - |
| 3 | 0.5 | L-GN | 199 | Left Rear Speaker (+) | II | - |
| 4 | 0.5 | WH | 46 | Right Rear Speaker (+) | II | - |
| 5-7 | - | - | - | Not Occupied | - | - |
| 8 | 0.75 | RD/VT | 340 | Battery Positive Voltage | I | - |
| 9 | 0.75 | BN/D-BU | 118 | Left Front Speaker Signal (-) (1) | I | - |
| 10 | 0.75 | YE/BK | 117 | Right Front Speaker Signal (-) (1) | I | - |
| 11 | 0.5 | L-GN/BK | 116 | Left Rear Speaker Signal (-) | II | - |
| 12 | 0.5 | D-BU/BK | 115 | Right Rear Speaker Signal (-) | II | - |
| 13-15 | - | - | - | Not Occupied | - | - |
| 16 | 0.75 | BK | 2550 | Ground | I | - |

## A11 Radio X4

### Connector Part Information

Harness Type:

OEM Connector: 13581686

Service Connector: Service by Harness - See Part Catalog

Description: 1

### *Terminal Part Information*

| Terminal Type ID | Terminated Lead | Diagnostic Test Probe | Terminal Removal Tool | Service Terminal | Tray | Core Crimp | Insulation Crimp |
|---|---|---|---|---|---|---|---|
| I | Not Available | Not Available | Not Available | Not Available | Not Available | Not Available | Not Available |

### *A11 Radio X4*

| Pin | Size | Color | Circuit | Function | Terminal Type ID | Option |
|---|---|---|---|---|---|---|
| A | - | - | - | Not Occupied | - | - |
| BK | | | COAX | AM/FM Antenna Signal | I | - |

## A16 Transfer Case Motor

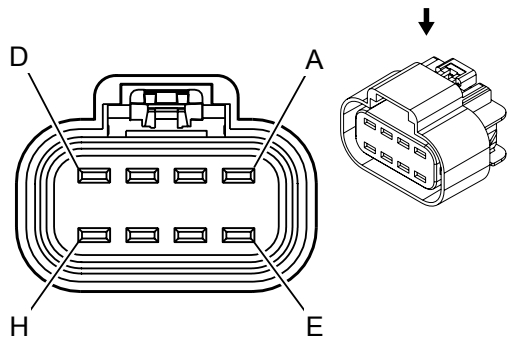


### Connector Part Information

Harness Type: Engine

OEM Connector: 13669205

Service Connector: 19300464

Description: 8-Way F 280 GT 5.8 Series, Sealed (BK)

### *Terminal Part Information*

| Terminal Type ID | Terminated Lead | Diagnostic Test Probe | Terminal Removal Tool | Service Terminal | Tray | Core Crimp | Insulation Crimp |
|---|---|---|---|---|---|---|---|
| I | Pending | J-35616-4A (PU) | J-38125-553 | Not Available | Not Available | Not Available | Not Available |

### *A16 Transfer Case Motor*

| Pin | Size | Color | Circuit | Function | Terminal Type ID | Option |
|---|---|---|---|---|---|---|
| A | 3<br>3 | YE/GY<br>OG | 1552<br>1552 | Transfer Case Motor Clockwise Control<br>Transfer Case Motor Clockwise Control | I | - |
| B-C | - | - | - | Not Occupied | - | - |
| D | 3 | YE/VT | 1553 | Transfer Case Motor Counter Clockwise Control | I | - |
| E | 0.5 | D-BU/GY | 7473 | Incremental Encoder Impulse Signal | I | - |
| F | 0.5 | YE | 7474 | Incremental Encoder Direction Signal | I | - |
| G | 0.5 | WH/L-GN | 7475 | Incremental Encoder Sensor (8V) Supply | I | - |
| H | 0.5 | VT | 7476 | Incremental Encoder Sensor Return | I | - |

## A23D Door Latch Assembly - Driver

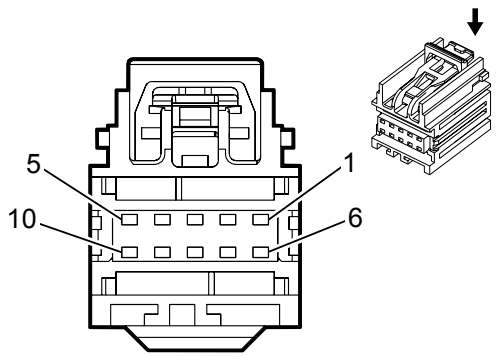


### Connector Part Information

Harness Type: Driver Door

OEM Connector: 13576047

Service Connector: 15127041

Description: 10-Way F 0.64 YESC Kaizen Series (GN)

### *Terminal Part Information*

| Terminal Type ID | Terminated Lead | Diagnostic Test Probe | Terminal Removal Tool | Service Terminal | Tray | Core Crimp | Insulation Crimp |
|---|---|---|---|---|---|---|---|
| I | 13327120 | J-35616-64B (L-BU) | J-38125-215A | SAIT-A03T-M064 | 14 | P | P |
| II | Pending | J-35616-64B (L-BU) | J-38125-215A | Not Available | Not Available | Not Available | Not Available |

### *A23D Door Latch Assembly - Driver*

| Pin | Size | Color | Circuit | Function | Terminal Type ID | Option |
|---|---|---|---|---|---|---|
| 1 | 0.35 | GY | 745 | Left Front Door Ajar Switch Signal | I | - |
| 2 | - | - | - | Not Occupied | - | - |
| 3 | 0.5 | BK | 1150 | Ground | I | - |
| 4 | 0.35 | WH/VT | 3270 | Driver Door Lock Motor Status | I | - |
| 5 | 0.35 | D-BU/VT | 1124 | Door Lock Key Switch Unlock Signal | I | - |
| 6 | - | - | - | Not Occupied | - | - |
| 7 | 0.75 | GY | 5911 | Door Lock Actuator Lock Control 2 | II | - |
| 8 | 0.75 | BN/BK | 294 | Door Lock Actuator Unlock Control | II | - |
| 9-10 | - | - | - | Not Occupied | - | - |

## A23LR Door Latch Assembly - Left Rear

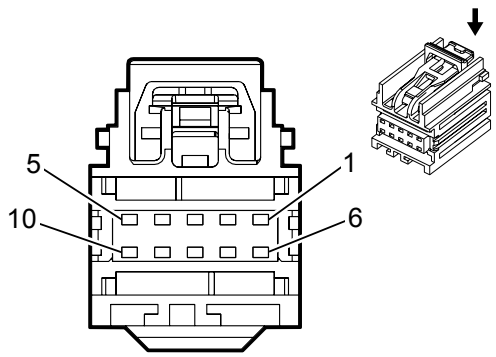


### Connector Part Information

Harness Type: Left Rear Door

OEM Connector: 13576047

Service Connector: 15127041

Description: 10-Way F 0.64 YESC Kaizen Series (GN)

### *Terminal Part Information*

| Terminal Type ID | Terminated Lead | Diagnostic Test Probe | Terminal Removal Tool | Service Terminal | Tray | Core Crimp | Insulation Crimp |
|---|---|---|---|---|---|---|---|
| I | 13327120 | J-35616-64B (L-BU) | J-38125-215A | SAIT-A03T-M064 | 14 | P | P |
| II | Pending | J-35616-64B (L-BU) | J-38125-215A | Not Available | Not Available | Not Available | Not Available |

### *A23LR Door Latch Assembly - Left Rear*

| Pin | Size | Color | Circuit | Function | Terminal Type ID | Option |
|---|---|---|---|---|---|---|
| 1 | 0.35 | GY/WH | 747 | Left Rear Door Ajar Switch Signal | I | - |
| 2 | 0.35 | BN/WH | 3269 | Child Security Lock Motor Status Signal Left Rear | I | - |
| 3 | 0.5 | BK | 1150 | Ground | I | - |
| 4-6 | - | - | - | Not Occupied | - | - |
| 7 | 0.75 | GY | 295 | Door Lock Actuator Lock Control | II | - |
| 8 | 0.75 | BN/YE | 294 | Door Lock Actuator Unlock Control | II | - |
| 9 | 0.75 | WH/D-BU | 3266 | Child Security Lock Motor Unlock Control | II | - |
| 10 | - | - | - | Not Occupied | - | - |

## A23P Door Latch Assembly - Passenger

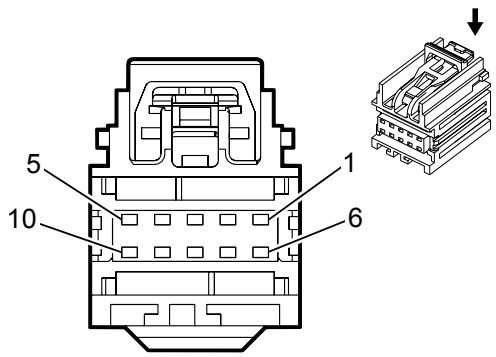


### Connector Part Information

Harness Type: Passenger Door

OEM Connector: 13576047

Service Connector: 15127041

Description: 10-Way F 0.64 YESC Kaizen Series (GN)

### *Terminal Part Information*

| Terminal Type ID | Terminated Lead | Diagnostic Test Probe | Terminal Removal Tool | Service Terminal | Tray | Core Crimp | Insulation Crimp |
|---|---|---|---|---|---|---|---|
| I | 13327120 | J-35616-64B (L-BU) | J-38125-215A | SAIT-A03T-M064 | 14 | P | P |
| II | Not Available | J-35616-64B (L-BU) | J-38125-215A | Not Available | Not Available | Not Available | Not Available |

### *A23P Door Latch Assembly - Passenger*

| Pin | Size | Color | Circuit | Function | Terminal Type ID | Option |
|---|---|---|---|---|---|---|
| 1-2 | - | - | - | Not Occupied | - | - |
| 3 | 0.5 | BK | 1250 | Ground | I | - |
| 4 | - | - | - | Not Occupied | - | - |
| 5 | 0.35 | GY | 746 | Right Front Door Ajar Switch Signal | I | - |
| 6-7 | - | - | - | Not Occupied | - | - |
| 8 | 0.75 | BN/YE | 294 | Door Lock Actuator Unlock Control | II | - |
| 9 | 0.75 | GY | 295 | Door Lock Actuator Lock Control | II | - |
| 10 | - | - | - | Not Occupied | - | - |

## A23RR Door Latch Assembly - Right Rear

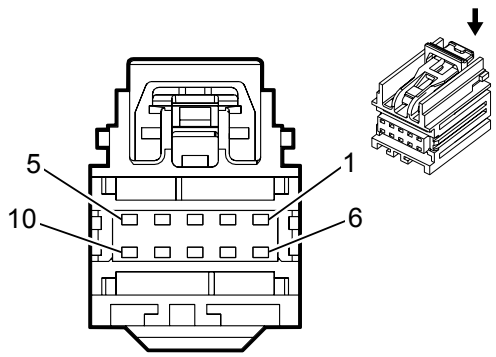


### Connector Part Information

Harness Type: Right Rear Door

OEM Connector: 13576047

Service Connector: 15127041

Description: 10-Way F 0.64 YESC Kaizen Series (GN)

### *Terminal Part Information*

| Terminal Type ID | Terminated Lead | Diagnostic Test Probe | Terminal Removal Tool | Service Terminal | Tray | Core Crimp | Insulation Crimp |
|---|---|---|---|---|---|---|---|
| I | 13327120 | J-35616-64B (L-BU) | J-38125-215A | SAIT-A03T-M064 | 14 | P | P |
| II | Pending | J-35616-64B (L-BU) | J-38125-215A | Not Available | Not Available | Not Available | Not Available |

### *A23RR Door Latch Assembly - Right Rear*

| Pin | Size | Color | Circuit | Function | Terminal Type ID | Option |
|---|---|---|---|---|---|---|
| 1-2 | - | - | - | Not Occupied | - | - |
| 3 | 0.5 | BK | 1250 | Ground | I | - |
| 4 | 0.35 | GY/BK | 3268 | Child Security Lock Motor Status Signal Right Rear | I | - |
| 5 | 0.35 | GY/WH | 748 | Right Rear Door Ajar Switch Signal | I | - |
| 6 | - | - | - | Not Occupied | - | - |
| 7 | 0.75 | WH/D-BU | 3266 | Child Security Lock Motor Unlock Control | II | - |
| 8 | 0.75 | BN/YE | 294 | Door Lock Actuator Unlock Control | II | - |
| 9 | 0.75 | GY | 295 | Door Lock Actuator Lock Control | II | - |
| 10 | - | - | - | Not Occupied | - | - |

## A33 Media Disc Player

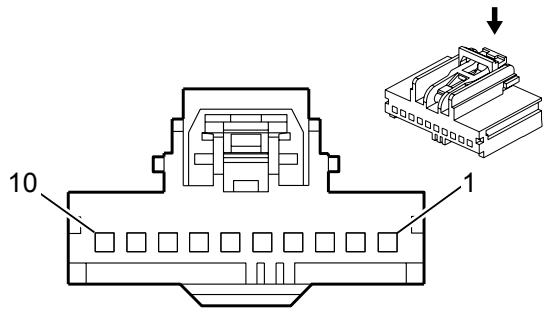


### Connector Part Information

Harness Type: Instrument Panel

OEM Connector: 15490628

Service Connector: 89047355

Description: 10-Way F 0.64 Kaizen Series (BK)

### *Terminal Part Information*

| Terminal Type ID | Terminated Lead | Diagnostic Test Probe | Terminal Removal Tool | Service Terminal | Tray | Core Crimp | Insulation Crimp |
|---|---|---|---|---|---|---|---|
| I | 13327120 | J-35616-64B (L-BU) | J-38125-215A | SAIT-A03T-M064 | 14 | P | P |
| II | Pending | J-35616-64B (L-BU) | J-38125-215A | Not Available | Not Available | Not Available | Not Available |

### *A33 Media Disc Player*

| Pin | Size | Color | Circuit | Function | Terminal Type ID | Option |
|---|---|---|---|---|---|---|
| 1 | 0.35 | WH/VT | 3999 | MOST Control | I | - |
| 2 | - | - | - | Not Occupied | - | - |
| 3 | 0.5 | WH/L-GN | 3997 | MOST Serial Data (-) | I | - |
| 4 | 0.5 | GY/VT | 3998 | MOST Serial Data (+) | I | - |
| 5 | 0.5 | WH/L-GN | 3997 | MOST Serial Data (-) | I | - |
| 6 | 0.5 | GY/VT | 3998 | MOST Serial Data (+) | I | - |
| 7 | - | - | - | Not Occupied | - | - |
| 8 | 0.75 | BK | 2550 | Ground | II | - |
| 9 | - | - | - | Not Occupied | - | - |
| 10 | 0.75 | RD/VT | 340 | Battery Positive Voltage | II | - |

## A33 Media Disc Player X1 (U42)

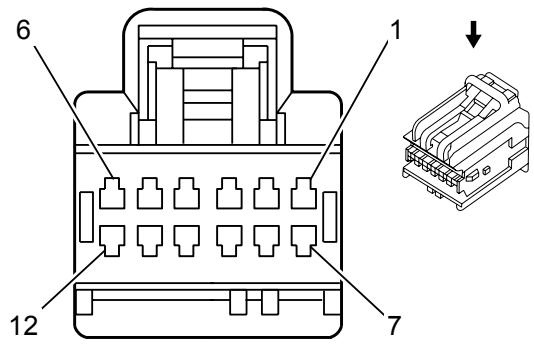


### Connector Part Information

Harness Type: Instrument Panel

OEM Connector: 13784026

Service Connector: 13578574

Description: 12-Way F 0.64 Series (BK)

### *Terminal Part Information*

| Terminal Type ID | Terminated Lead | Diagnostic Test Probe | Terminal Removal Tool | Service Terminal | Tray | Core Crimp | Insulation Crimp |
|---|---|---|---|---|---|---|---|
| I | Not Available | J-35616-16 (L-GN) | J-38125-559 | 15445905 | 23 | K | K |
| II | Not Available | J-35616-16 (L-GN) | J-38125-559 | 15445905 | 23 | J | J |

### *A33 Media Disc Player X1 (U42)*

| Pin | Size | Color | Circuit | Function | Terminal Type ID | Option |
|---|---|---|---|---|---|---|
| 1 | 0.75 | RD/VT | 340 | Battery Positive Voltage | I | - |
| 2 | - | - | - | Not Occupied | - | - |
| 3 | 0.5 | WH/L-GN | 3997 | MOST Serial Data (-) | II | - |
| 4 | 0.5 | GY/VT | 3998 | MOST Serial Data (+) | II | - |
| 5 | 0.5 | WH/L-GN | 3997 | MOST Serial Data (-) | II | - |
| 6 | 0.5 | GY/VT | 3998 | MOST Serial Data (+) | II | - |
| 7 | 0.5 | BK | 2550 | Ground | II | - |
| 8 | 0.35 | L-GN/YE | 7066 | Entertainment Remote Enable Signal | II | - |
| 9 | - | - | - | Not Occupied | - | - |
| 10 | 0.35 | WH/VT | 3999 | MOST Control | II | - |
| 11 | 0.5 | L-GN | 5060 | Low Speed GMLAN Serial Data | II | - |
| 12 | - | - | - | Not Occupied | - | - |

## A33 Media Disc Player X2 (U42)

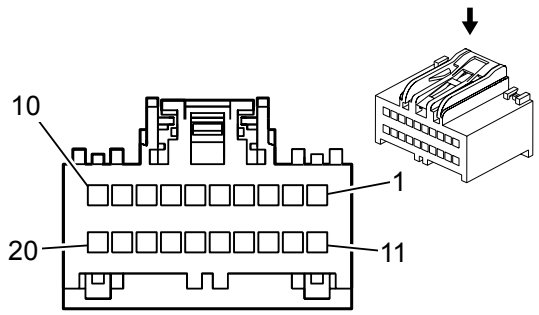


### Connector Part Information

Harness Type: Instrument Panel

OEM Connector: 15491304

Service Connector: 15126710

Description: 20-Way F USCAR 64  Series (GY)

### *Terminal Part Information*

| Terminal Type ID | Terminated Lead | Diagnostic Test Probe | Terminal Removal Tool | Service Terminal | Tray | Core Crimp | Insulation Crimp |
|---|---|---|---|---|---|---|---|
| I | 13327120 | J-35616-64B (L-BU) | J-38125-215A | SAIT-A03T-M064 | 14 | P | P |

### *A33 Media Disc Player X2 (U42)*

| Pin | Size | Color | Circuit | Function | Terminal Type ID | Option |
|---|---|---|---|---|---|---|
| 1 | 0.35 | L-GN/WH | 3355 | Left Rear Seat Audio Headphone Signal | I | - |
| 2 | 0.35 | BN/GY | 3357 | Right Rear Seat Audio Headphone Signal | I | - |
| 3 | 0.35 | D-BU/VT | 3356 | Rear Seat Audio Headphone Common Signal | I | - |
| 4 | 0.5 | Bare | 3354 | Rear Seat Audio Headphone Drain Wire | I | - |
| 5-10 | - | - | - | Not Occupied | - | - |
| 11 | 0.35 | YE | 2059 | Left Auxiliary Audio Signal (1) | I | - |
| 12 | 0.35 | WH | 2058 | Right Auxiliary Audio Signal (1) | I | - |
| 13 | 0.35 | BN | 3374 | Auxiliary Audio Common Signal (2) | I | - |
| 14 | 0.5 | Bare | 5345 | Auxiliary Audio Drain Wire (1) | I | - |
| 15 | 0.35 | YE | 2056 | Auxiliary Video High Signal | I | - |
| 16 | 0.5 | Bare | 2057 | Auxiliary Video Low Signal | I | - |
| 17-20 | - | - | - | Not Occupied | - | - |

## B1 A/C Refrigerant Pressure Sensor

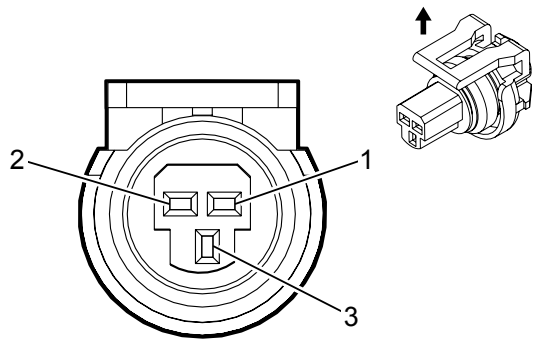


### Connector Part Information

Harness Type: Engine

OEM Connector: 13846842

Service Connector: 19301715

Description: 3-Way F 150 GT Series, Sealed (BK)

### *Terminal Part Information*

| Terminal Type ID | Terminated Lead | Diagnostic Test Probe | Terminal Removal Tool | Service Terminal | Tray | Core Crimp | Insulation Crimp |
|---|---|---|---|---|---|---|---|
| I | 13576360 | J-35616-2A (GY) | J-38125-553 | 15326267 | 19 | E | 4 |

### *B1 A/C Refrigerant Pressure Sensor*

| Pin | Size | Color | Circuit | Function | Terminal Type ID | Option |
|---|---|---|---|---|---|---|
| 1 | 0.5 | BK/BN | 5514 | A/C Refrigerant Pressure Sensor Low Reference | I | - |
| 2 | 0.5 | BN/RD | 2700 | A/C Pressure Sensor 5 Volt Reference | I | - |
| 3 | 0.5 | L-GN | 380 | A/C Refrigerant Pressure Sensor Signal | I | - |

## B5LF Wheel Speed Sensor - Left Front

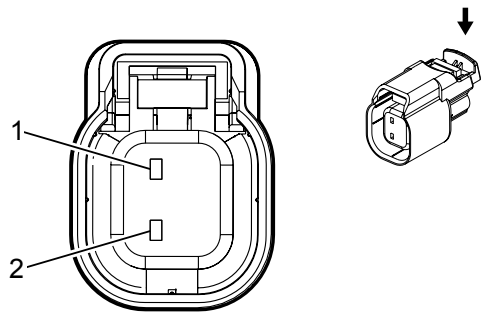


### Connector Part Information

Harness Type: Chassis

OEM Connector: 13828712

Service Connector: 19300543

Description: 2-Way F 1.5 Series, Sealed (BK)

### *Terminal Part Information*

| Terminal Type ID | Terminated Lead | Diagnostic Test Probe | Terminal Removal Tool | Service Terminal | Tray | Core Crimp | Insulation Crimp |
|---|---|---|---|---|---|---|---|
| I | 13576370 | J-35616-2A (GY) | J-38125-11A | 7116-4102-08 | 9 | E | 1 |

### *B5LF Wheel Speed Sensor - Left Front*

| Pin | Size | Color | Circuit | Function | Terminal Type ID | Option |
|---|---|---|---|---|---|---|
| 1 | 0.5 | GY/WH | 7064 | Wheel Speed Sensor Supply Voltage Left Front | I | - |
| 2 | 0.5 | GY | 830 | Wheel Speed Sensor Signal Left Front | I | - |

## B5LR Wheel Speed Sensor - Left Rear

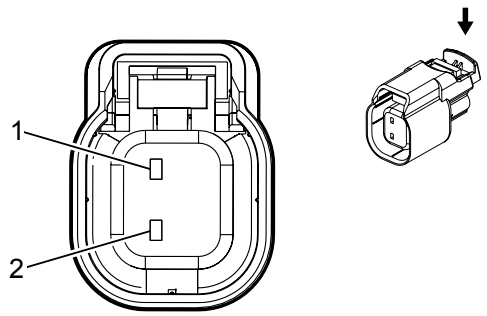


### Connector Part Information

Harness Type: Chassis

OEM Connector: 13828712

Service Connector: 19300543

Description: 2-Way F 1.5 Series, Sealed (BK)

### *Terminal Part Information*

| Terminal Type ID | Terminated Lead | Diagnostic Test Probe | Terminal Removal Tool | Service Terminal | Tray | Core Crimp | Insulation Crimp |
|---|---|---|---|---|---|---|---|
| I | 13576370 | J-35616-2A (GY) | J-38125-11A | 7116-4102-08 | 9 | E | 1 |

### *B5LR Wheel Speed Sensor - Left Rear*

| Pin | Size | Color | Circuit | Function | Terminal Type ID | Option |
|---|---|---|---|---|---|---|
| 1 | 0.5 | GY/BK | 7127 | Wheel Speed Sensor Supply Voltage Left Rear | I | - |
| 2 | 0.5 | D-BU | 884 | Wheel Speed Sensor Signal Left Rear | I | - |

## B5RF Wheel Speed Sensor - Right Front

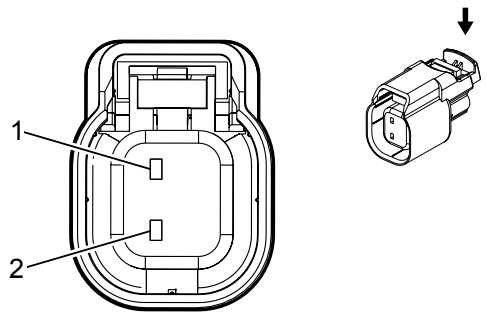


### Connector Part Information

Harness Type: Chassis

OEM Connector: 13828712

Service Connector: 19300543

Description: 2-Way F 1.5 Series, Sealed (BK)

### *Terminal Part Information*

| Terminal Type ID | Terminated Lead | Diagnostic Test Probe | Terminal Removal Tool | Service Terminal | Tray | Core Crimp | Insulation Crimp |
|---|---|---|---|---|---|---|---|
| I | 13576370 | J-35616-2A (GY) | J-38125-11A | 7116-4102-08 | 9 | E | 1 |

### *B5RF Wheel Speed Sensor - Right Front*

| Pin | Size | Color | Circuit | Function | Terminal Type ID | Option |
|---|---|---|---|---|---|---|
| 1 | 0.5 | GY/BN | 7065 | Wheel Speed Sensor Supply Voltage Right Front | I | - |
| 2 | 0.5 | YE | 872 | Wheel Speed Sensor Signal Right Front | I | - |

## B5RR Wheel Speed Sensor - Right Rear

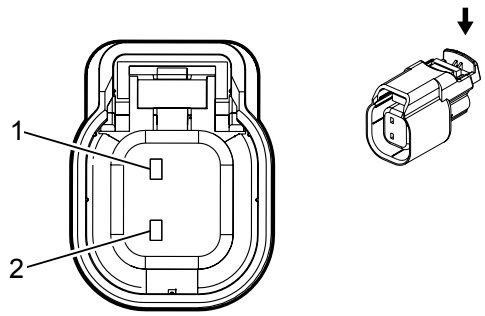


### Connector Part Information

Harness Type: Chassis

OEM Connector: 13828712

Service Connector: 19300543

Description: 2-Way F 1.5 Series, Sealed (BK)

### *Terminal Part Information*

| Terminal Type ID | Terminated Lead | Diagnostic Test Probe | Terminal Removal Tool | Service Terminal | Tray | Core Crimp | Insulation Crimp |
|---|---|---|---|---|---|---|---|
| I | 13576370 | J-35616-2A (GY) | J-38125-11A | 7116-4102-08 | 9 | E | 1 |

### *B5RR Wheel Speed Sensor - Right Rear*

| Pin | Size | Color | Circuit | Function | Terminal Type ID | Option |
|---|---|---|---|---|---|---|
| 1 | 0.5 | GY/YE | 7128 | Wheel Speed Sensor Supply Voltage Right Rear | I | - |
| 2 | 0.5 | VT | 882 | Wheel Speed Sensor Signal Right Rear | I | - |

## B6 Clutch Position Sensor

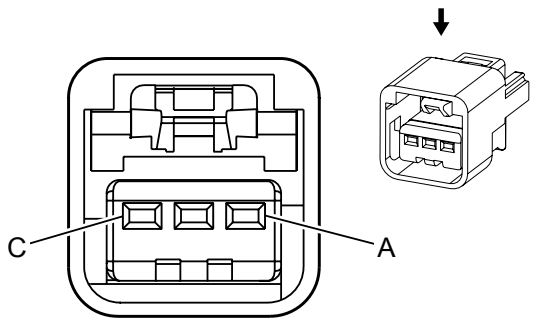


### Connector Part Information

Harness Type: Brake Clutch Jumper

OEM Connector: 15332132

Service Connector: 88953364

Description: 3-Way F 150 GT Series (BK)

### *Terminal Part Information*

| Terminal Type ID | Terminated Lead | Diagnostic Test Probe | Terminal Removal Tool | Service Terminal | Tray | Core Crimp | Insulation Crimp |
|---|---|---|---|---|---|---|---|
| I | 13327110 | J-35616-2A (GY) | J-38125-553 | 12191812 | 19 | E | C |

### *B6 Clutch Position Sensor*

| Pin | Size | Color | Circuit | Function | Terminal Type ID | Option |
|---|---|---|---|---|---|---|
| A | 0.5 | GY/RD | 6109 | Clutch Apply Sensor Voltage Reference | I | - |
| B | 0.5 | YE | 6111 | Clutch Apply Sensor Signal | I | - |
| C | 0.5 | BK/GY | 6110 | Clutch Apply Sensor Low Reference | I | - |

## B9 Ambient Air Temperature Sensor

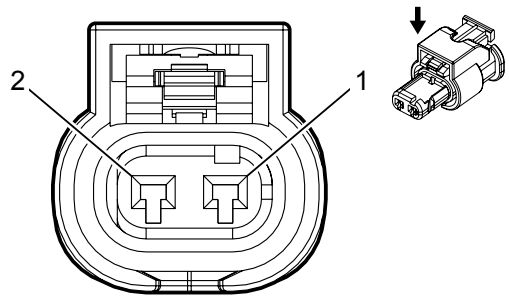


### Connector Part Information

Harness Type: Forward Lamp

OEM Connector: 13627836

Service Connector: No SDC/FSU

Description: 2-Way F 1.2 MCP Series, Sealed (BK)

### *Terminal Part Information*

| Terminal Type ID | Terminated Lead | Diagnostic Test Probe | Terminal Removal Tool | Service Terminal | Tray | Core Crimp | Insulation Crimp |
|---|---|---|---|---|---|---|---|
| I | Pending | J-35616-64B (L-BU) | J-38125-12A | Not Available | Not Available | Not Available | Not Available |

### *B9 Ambient Air Temperature Sensor*

| Pin | Size | Color | Circuit | Function | Terminal Type ID | Option |
|---|---|---|---|---|---|---|
| 1 | 0.5 | D-BU/GY | 636 | Outside Ambient Air Temperature Sensor Signal | I | - |
| 2 | 0.5 | BK/D-BU | 61 | Outside Ambient Temperature Sensor Low Reference | I | - |

## B10B Ambient Light/Sunload Sensor

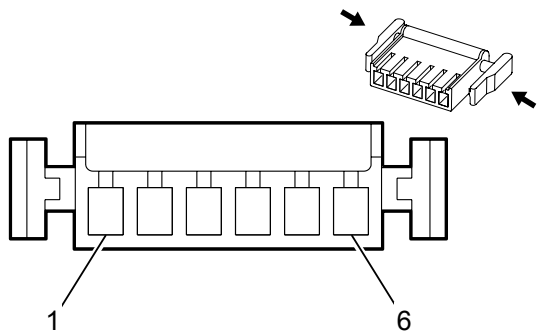


### Connector Part Information

Harness Type: Instrument Panel

OEM Connector: 13726957

Service Connector: 13576539

Description: 6-Way F 0.64 Micro Quadlock Series (BK)

### *Terminal Part Information*

| Terminal Type ID | Terminated Lead | Diagnostic Test Probe | Terminal Removal Tool | Service Terminal | Tray | Core Crimp | Insulation Crimp |
|---|---|---|---|---|---|---|---|
| I | 13575390 | J-35616-64B (L-BU) | J-38125-12A | 928999-5 | 15 | H | H |

### *B10B Ambient Light/Sunload Sensor*

| Pin | Size | Color | Circuit | Function | Terminal Type ID | Option |
|---|---|---|---|---|---|---|
| 1 | 0.35 | GY | 728 | Security Indicator Control | I | - |
| 2 | 0.35 | GY | 590 | Solar Sensor Driver Signal | I | - |
| 3 | 0.35 | D-BU/WH | 734 | Inside Air Temperature Sensor Signal | I | - |
| 4 | 0.35 | YE/VT | 1783 | Twilight Sentinel Delay Signal | I | - |
| 5 | 0.35 | WH/D-BU | 278 | Ambient Light Sensor Signal | I | - |
| 6 | 0.35 | BK/YE | 1791 | Air Temperature Door Control Low Reference | I | - |

## B14A Transmission Output Shaft Speed Sensor

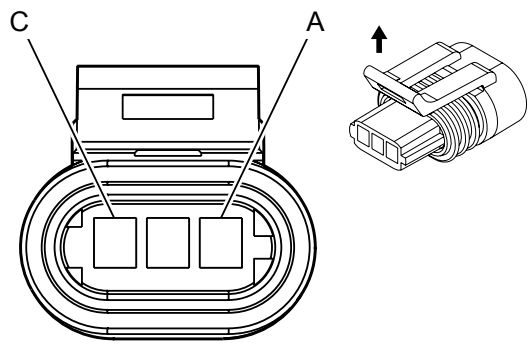


### Connector Part Information

Harness Type: Engine

OEM Connector: 12162280

Service Connector: 12085538

Description: 3-Way F 150.2 Metri Pack Pull To Seat Series, Sealed (GY)

### *Terminal Part Information*

| Terminal Type ID | Terminated Lead | Diagnostic Test Probe | Terminal Removal Tool | Service Terminal | Tray | Core Crimp | Insulation Crimp |
|---|---|---|---|---|---|---|---|
| I | Not Available | J-35616-14 (GN) | J-38125-559 | 12124075 | 5 | E | C |

### *B14A Transmission Output Shaft Speed Sensor*

| Pin | Size | Color | Circuit | Function | Terminal Type ID | Option |
|---|---|---|---|---|---|---|
| A | 0.5 | GY/BK | 3096 | Output Speed (Digital) 5V Sensor Reference | I | - |
| B | 0.5 | L-GN | 3098 | Output Speed (Digital) Signal | I | - |
| C | 0.5 | WH/BK | 3097 | Output Speed (Digital) 5V Sensor Return | I | - |

## B14A Transmission Output Shaft Speed Sensor

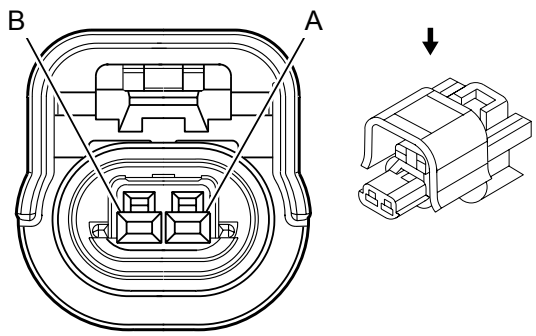


### Connector Part Information

Harness Type: Engine

OEM Connector: 15490464

Service Connector: 13504951

Description: 2-Way F 150 GT Series, Sealed (BK)

### *Terminal Part Information*

| Terminal Type ID | Terminated Lead | Diagnostic Test Probe | Terminal Removal Tool | Service Terminal | Tray | Core Crimp | Insulation Crimp |
|---|---|---|---|---|---|---|---|
| I | 13576360 | J-35616-2A (GY) | J-38125-553 | 15326267 | 19 | E | 4 |

### *B14A Transmission Output Shaft Speed Sensor*

| Pin | Size | Color | Circuit | Function | Terminal Type ID | Option |
|---|---|---|---|---|---|---|
| A | 0.5 | VT/WH | 821 | Vehicle Speed Sensor Signal | I | - |
| B | 0.5 | BK/L-GN | 822 | Vehicle Speed Sensor Low Reference | I | - |

## B14A Transmission Output Shaft Speed Sensor

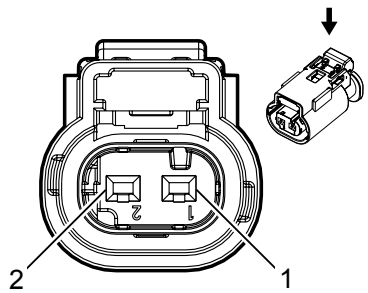


### Connector Part Information

Harness Type: Engine

OEM Connector: 13735326

Service Connector: 13587326

Description: 2-Way F 1.2 MLK Series, Sealed (BK)

### *Terminal Part Information*

| Terminal Type ID | Terminated Lead | Diagnostic Test Probe | Terminal Removal Tool | Service Terminal | Tray | Core Crimp | Insulation Crimp |
|---|---|---|---|---|---|---|---|
| I | Not Available | Not Available | Not Available | Not Available | Not Available | Not Available | Not Available |

### *B14A Transmission Output Shaft Speed Sensor*

| Pin | Size | Color | Circuit | Function | Terminal Type ID | Option |
|---|---|---|---|---|---|---|
| 1 | 0.5<br>0.75 | GY/D-BU<br>GY/D-BU | 6358<br>6358 | Output Speed Signal<br>Output Speed Signal | I | - |
| 2 | 0.5<br>0.75 | YE/L-GN<br>YE/L-GN | 4170<br>4170 | Transmission Sensor B Voltage Reference 9V<br>Transmission Sensor B Voltage Reference 9V | I | - |

# B14A Transmission Output Shaft Speed Sensor

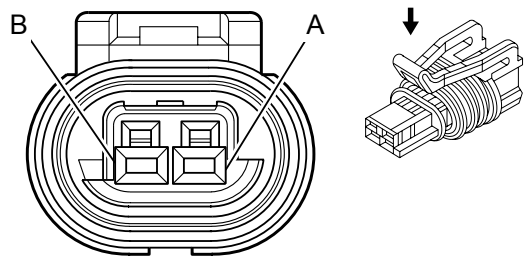


## Connector Part Information

Harness Type: Engine

OEM Connector: 15449028

Service Connector: 88987993

Description: 2-Way F 150 GT Series, Sealed (BK)

## *Terminal Part Information*

| Terminal Type ID | Terminated Lead | Diagnostic Test Probe | Terminal Removal Tool | Service Terminal | Tray | Core Crimp | Insulation Crimp |
|---|---|---|---|---|---|---|---|
| I | 13576360 | J-35616-2A (GY) | J-38125-553 | 15326267 | 19 | E | 4 |

## *B14A Transmission Output Shaft Speed Sensor*

| Pin | Size | Color | Circuit | Function | Terminal Type ID | Option |
|---|---|---|---|---|---|---|
| A | 0.5 | VT/WH | 821 | Vehicle Speed Sensor Signal | I | - |
| B | 0.5 | BK/L-GN | 822 | Vehicle Speed Sensor Low Reference | I | - |

## B14C Transmission Input Shaft Speed Sensor

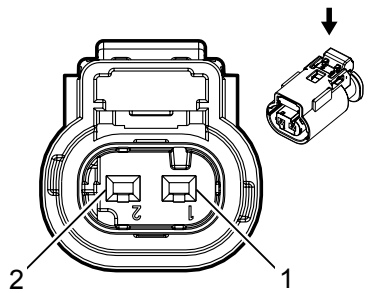


### Connector Part Information

Harness Type: Engine

OEM Connector: 13735326

Service Connector: 13587326

Description: 2-Way F 1.2 MLK Series, Sealed (BK)

### *Terminal Part Information*

| Terminal Type ID | Terminated Lead | Diagnostic Test Probe | Terminal Removal Tool | Service Terminal | Tray | Core Crimp | Insulation Crimp |
|---|---|---|---|---|---|---|---|
| I | Not Available | Not Available | Not Available | Not Available | Not Available | Not Available | Not Available |

### *B14C Transmission Input Shaft Speed Sensor*

| Pin | Size | Color | Circuit | Function | Terminal Type ID | Option |
|---|---|---|---|---|---|---|
| 1 | 0.75 | L-GN/YE | 6353 | Input Speed Signal | I | - |
| 2 | 0.75 | YE/D-BU | 4171 | Transmission Sensor A Voltage Reference 9V | I | - |

## B14C Transmission Input Shaft Speed Sensor

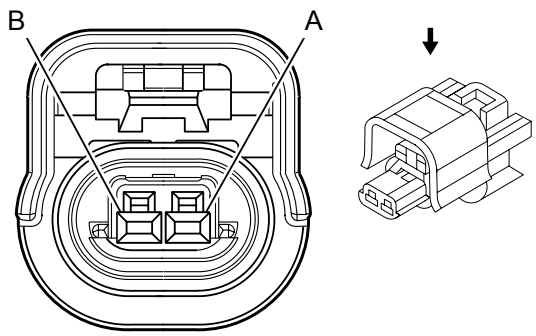


### Connector Part Information

Harness Type: Engine

OEM Connector: 15490464

Service Connector: 13504951

Description: 2-Way F 150 GT Series, Sealed (BK)

### *Terminal Part Information*

| Terminal Type ID | Terminated Lead | Diagnostic Test Probe | Terminal Removal Tool | Service Terminal | Tray | Core Crimp | Insulation Crimp |
|---|---|---|---|---|---|---|---|
| I | 13576360 | J-35616-2A (GY) | J-38125-553 | 15326267 | 19 | E | 4 |

### *B14C Transmission Input Shaft Speed Sensor*

| Pin | Size | Color | Circuit | Function | Terminal Type ID | Option |
|---|---|---|---|---|---|---|
| A | 0.5 | WH/BK | 1983 | Transmission Turbine Speed Switch Signal | I | - |
| B | 0.5 | BK/D-BU | 1984 | Transmission Turbine Speed Switch Low Reference | I | - |

## B16 Backup Lamp Switch

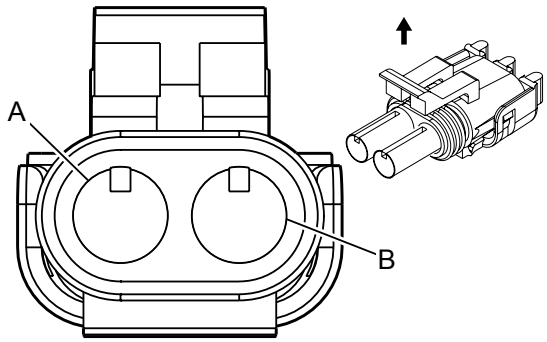


### Connector Part Information

Harness Type: Engine

OEM Connector: 12103584

Service Connector: 12085485

Description: 2-Way M Weather Pack Series (BK)

### *Terminal Part Information*

| Terminal Type ID | Terminated Lead | Diagnostic Test Probe | Terminal Removal Tool | Service Terminal | Tray | Core Crimp | Insulation Crimp |
|---|---|---|---|---|---|---|---|
| I | Pending | J-35616-9 (OG) | J-38125-10A | 12089040 | 3 | E | 5 |

### *B16 Backup Lamp Switch*

| Pin | Size | Color | Circuit | Function | Terminal Type ID | Option |
|---|---|---|---|---|---|---|
| A | 0.75 | BK/WH | 451 | Signal Ground | I | - |
| B | 0.5 | L-GN/WH | 5007 | Reverse Switch Signal | I | - |

## B16 Backup Lamp Switch

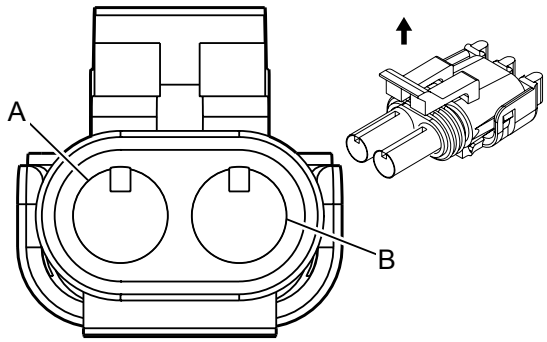


### Connector Part Information

Harness Type: Engine

OEM Connector: 12103584

Service Connector: 12085485

Description: 2-Way M Weather Pack Series (BK)

### *Terminal Part Information*

| Terminal Type ID | Terminated Lead | Diagnostic Test Probe | Terminal Removal Tool | Service Terminal | Tray | Core Crimp | Insulation Crimp |
|---|---|---|---|---|---|---|---|
| I | Not Available | J-35616-9 (OG) | J-38125-10A | 12089040 | 3 | E | 5 |

### *B16 Backup Lamp Switch*

| Pin | Size | Color | Circuit | Function | Terminal Type ID | Option |
|---|---|---|---|---|---|---|
| A | 0.75 | BK/WH | 451 | Signal Ground | I | - |
| B | 0.5 | L-GN/WH | 5007 | Reverse Switch Signal | I | - |

## B18 Battery Current Sensor

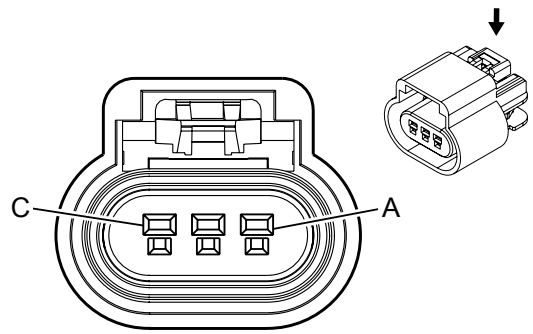


### Connector Part Information

Harness Type: Engine

OEM Connector: 13519047

Service Connector: SEE NOTE

Description: 3-Way F 150 GT Series, Sealed (BK)

### *Terminal Part Information*

| Terminal Type ID | Terminated Lead | Diagnostic Test Probe | Terminal Removal Tool | Service Terminal | Tray | Core Crimp | Insulation Crimp |
|---|---|---|---|---|---|---|---|
| I | 13575298 | J-35616-2A (GY) | J-38125-553 | 12191819 | 8 | E | 1 |

### *B18 Battery Current Sensor*

| Pin | Size | Color | Circuit | Function | Terminal Type ID | Option |
|---|---|---|---|---|---|---|
| A | 0.5 | D-BU/VT | 5076 | Current Sensor Supply Voltage | I | - |
| B | 0.5 | BK/PU | 5077 | Current Sensor Low Reference | I | - |
| C | 0.5 | WH/YE | 5075 | Current Sensor Signal | I | - |

## B19B Brake Booster Vacuum Sensor

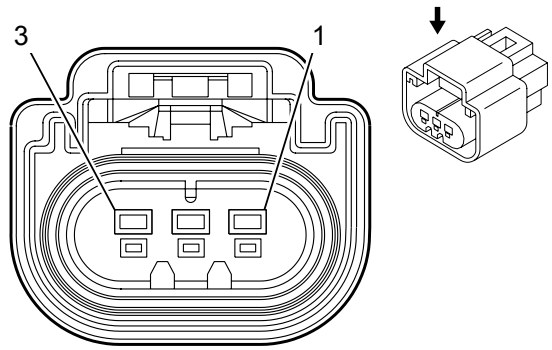


### Connector Part Information

Harness Type: Chassis

OEM Connector: 13511996

Service Connector: 13580873

Description: 3-Way F 150 GT Series, Sealed (GY)

### *Terminal Part Information*

| Terminal Type ID | Terminated Lead | Diagnostic Test Probe | Terminal Removal Tool | Service Terminal | Tray | Core Crimp | Insulation Crimp |
|---|---|---|---|---|---|---|---|
| I | 13575298 | J-35616-2A (GY) | J-38125-553 | 12191819 | 8 | E | 1 |

### *B19B Brake Booster Vacuum Sensor*

| Pin | Size | Color | Circuit | Function | Terminal Type ID | Option |
|---|---|---|---|---|---|---|
| 1 | 0.5 | YE/VT | 6030 | Brake Vacuum Sensor Signal | I | - |
| 2 | 0.5 | BK/YE | 6032 | Brake Vacuum Sensor Low Reference | I | - |
| 3 | 0.5 | YE/RD | 6031 | Brake Vacuum Sensor 5 Volt Reference | I | - |

## B20 Brake Fluid Level Switch

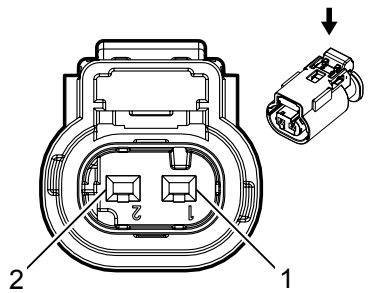


### Connector Part Information

Harness Type: Chassis

OEM Connector: 13735326

Service Connector: 13587326

Description: 2-Way F 1.2 MLK Series, Sealed (BK)

### *Terminal Part Information*

| Terminal Type ID | Terminated Lead | Diagnostic Test Probe | Terminal Removal Tool | Service Terminal | Tray | Core Crimp | Insulation Crimp |
|---|---|---|---|---|---|---|---|
| I | Pending | Pending | Pending | Not Available | Not Available | Not Available | Not Available |

### *B20 Brake Fluid Level Switch*

| Pin | Size | Color | Circuit | Function | Terminal Type ID | Option |
|---|---|---|---|---|---|---|
| 1 | 0.5 | BK | 2150 | Ground | I | - |
| 2 | 0.5 | L-GN/GY | 333 | Brake Fluid Level Sensor Signal | I | - |

## B22 Brake Pedal Position Sensor

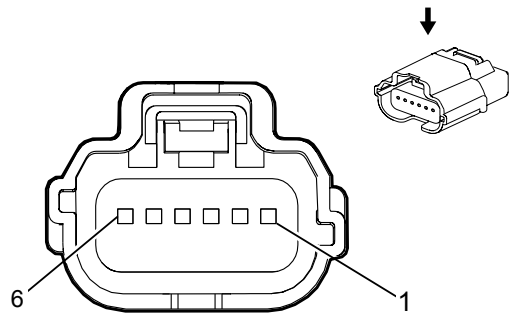


### Connector Part Information

Harness Type: Brake Clutch Jumper

OEM Connector: 13893502

Service Connector: 13577043

Description: 6-Way F 64 Series, Sealed (NA)

### *Terminal Part Information*

| Terminal Type ID | Terminated Lead | Diagnostic Test Probe | Terminal Removal Tool | Service Terminal | Tray | Core Crimp | Insulation Crimp |
|---|---|---|---|---|---|---|---|
| I | Pending | Pending | Pending | Not Available | Not Available | Not Available | Not Available |

### *B22 Brake Pedal Position Sensor*

| Pin | Size | Color | Circuit | Function | Terminal Type ID | Option |
|---|---|---|---|---|---|---|
| 1 | 0.5 | BK/L-GN | 552 | Sensor Low Reference | I | - |
| 2 | 0.5 | GY/RD | 598 | 5 Volt Reference | I | - |
| 3 | 0.5 | WH/L-GN | 526 | Stop Lamp Switch Signal | I | - |
| 4 | 0.5 | D-BU/YE | 5361 | Brake Apply Sensor Signal | I | - |
| 5 | 0.5 | BK/BN | 5360 | Brake Apply Sensor Low Reference | I | - |
| 6 | 0.5 | WH | 5359 | Brake Apply Sensor Supply Voltage | I | - |

## B23 Camshaft Position Sensor (L96)

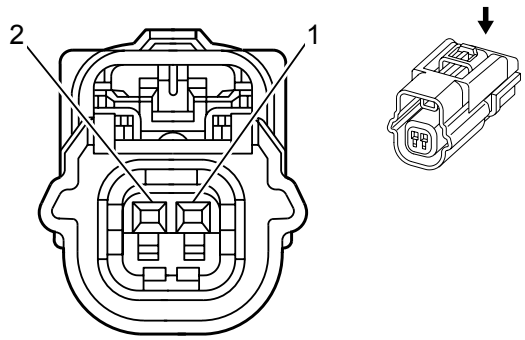


### Connector Part Information

Harness Type: Camshaft Position Sensor Jumper

OEM Connector: 13528494

Service Connector: 13585856

Description: 2-Way F Kaizen 64 Series, Sealed (BK)

### *Terminal Part Information*

| Terminal Type ID | Terminated Lead | Diagnostic Test Probe | Terminal Removal Tool | Service Terminal | Tray | Core Crimp | Insulation Crimp |
|---|---|---|---|---|---|---|---|
| I | 13587474 | J-35616-64B (L-BU) | J-38125-215A | Not Available | Not Available | P | P |

### *B23 Camshaft Position Sensor (L96)*

| Pin | Size | Color | Circuit | Function | Terminal Type ID | Option |
|---|---|---|---|---|---|---|
| 1 | 0.35 | PU | 2199 | Camshaft Phaser Solenoid Low Reference | I | - |
| 2 | 0.35 | | 5284 | Camshaft Phaser Intake Solenoid (1) | I | - |

## B23 Camshaft Position Sensor (LML)

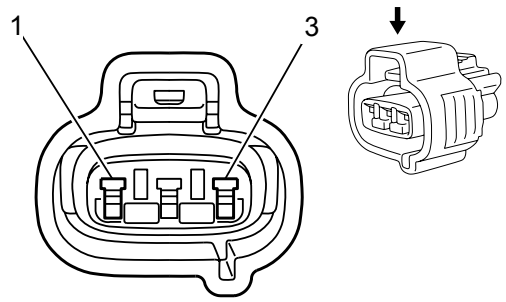


### Connector Part Information

Harness Type: Engine

OEM Connector: 6248-5317

Service Connector: 13576413

Description: 3-Way F Sealed (GY)

### *Terminal Part Information*

| Terminal Type ID | Terminated Lead | Diagnostic Test Probe | Terminal Removal Tool | Service Terminal | Tray | Core Crimp | Insulation Crimp |
|---|---|---|---|---|---|---|---|
| I | Pending | Pending | Pending | Not Available | Not Available | Not Available | Not Available |

### *B23 Camshaft Position Sensor (LML)*

| Pin | Size | Color | Circuit | Function | Terminal Type ID | Option |
|---|---|---|---|---|---|---|
| 1 | 0 | BU/WH | 6265 | Camshaft CAM W Signal | I | LML |
| 2 | 0 | BR | 6266 | Camshaft CAM W Ground | I | LML |
| 3 | 0 | BU | 6259 | Camshaft CAM W Supply Voltage | I | LML |

## B24 Cellular Phone Microphone

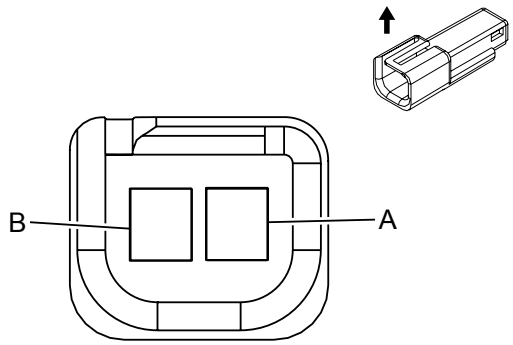


### Connector Part Information

Harness Type: Headliner

OEM Connector: 12047663

Service Connector: 13584278

Description: 2-Way M 150 Metri Pack Series (BK)

### *Terminal Part Information*

| Terminal Type ID | Terminated Lead | Diagnostic Test Probe | Terminal Removal Tool | Service Terminal | Tray | Core Crimp | Insulation Crimp |
|---|---|---|---|---|---|---|---|
| I | Not Available | J-35616-3 (GY) | J-38125-12A | 12047581 | 2 | E | C |

### *B24 Cellular Phone Microphone*

| Pin | Size | Color | Circuit | Function | Terminal Type ID | Option |
|---|---|---|---|---|---|---|
| A | 0.35 | BK/BN | 654 | Cellular Telephone Microphone Low Reference | I | - |
| B | 0.35 | D-BU | 655 | Cellular Telephone Microphone Signal | I | - |

## B26 Crankshaft Position Sensor

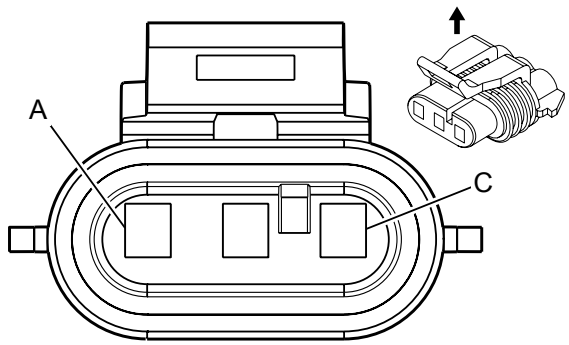


### Connector Part Information

Harness Type: Engine

OEM Connector: 13838337

Service Connector: Not Available

Description: 3-Way F 150 Metri Pack Series, Sealed (GY)

### *Terminal Part Information*

| Terminal Type ID | Terminated Lead | Diagnostic Test Probe | Terminal Removal Tool | Service Terminal | Tray | Core Crimp | Insulation Crimp |
|---|---|---|---|---|---|---|---|
| I | 13588112 | J-35616-14 (GN) | J-38125-12A | 12048074 | 2 | E | 1 |

### *B26 Crankshaft Position Sensor*

| Pin | Size | Color | Circuit | Function | Terminal Type ID | Option |
|---|---|---|---|---|---|---|
| A | 0.5 | L-GN | 6271 | Crankshaft 60X Sensor Signal | I | - |
| B | 0.5 | BK/PU | 6272 | Crankshaft 60X Sensor Low Reference | I | - |
| C | 0.5 | VT/D-BU | 6270 | Crankshaft 60X Sensor Voltage | I | - |

## B26 Crankshaft Position Sensor

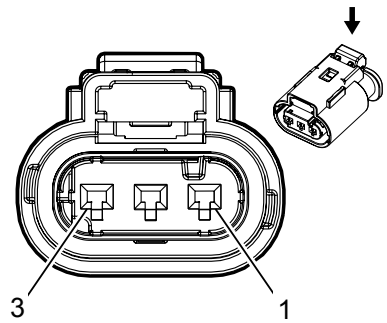


### Connector Part Information

Harness Type: Engine

OEM Connector: 13763990

Service Connector: 19299690

Description: 3-Way F 1.2 MLK Series, Sealed (BK)

### *Terminal Part Information*

| Terminal Type ID | Terminated Lead | Diagnostic Test Probe | Terminal Removal Tool | Service Terminal | Tray | Core Crimp | Insulation Crimp |
|---|---|---|---|---|---|---|---|
| I | Not Available | Not Available | Not Available | Not Available | Not Available | Not Available | Not Available |

### *B26 Crankshaft Position Sensor*

| Pin | Size | Color | Circuit | Function | Terminal Type ID | Option |
|---|---|---|---|---|---|---|
| 1 | 0.5 | L-GN | 6271 | Crankshaft 60X Sensor Signal | I | - |
| 2 | 0.5 | BK/PU | 6272 | Crankshaft 60X Sensor Low Reference | I | - |
| 3 | 0.5 | VT/D-BU | 6270 | Crankshaft 60X Sensor Voltage | I | - |

## B26 Crankshaft Position Sensor (L96)

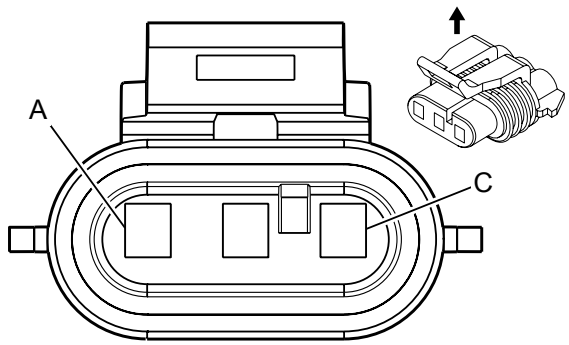


### Connector Part Information

Harness Type: Engine

OEM Connector: 13838337

Service Connector: Pending

Description: 3-Way F 150 Metri Pack Series, Sealed (GY)

### *Terminal Part Information*

| Terminal Type ID | Terminated Lead | Diagnostic Test Probe | Terminal Removal Tool | Service Terminal | Tray | Core Crimp | Insulation Crimp |
|---|---|---|---|---|---|---|---|
| I | 13588112 | J-35616-14 (GN) | J-38125-12A | 12048074 | 2 | E | 1 |

### *B26 Crankshaft Position Sensor (L96)*

| Pin | Size | Color | Circuit | Function | Terminal Type ID | Option |
|---|---|---|---|---|---|---|
| A | 0.5 | L-GN | 6271 | Crankshaft 60X Sensor Signal | I | - |
| B | 0.5 | BK/PU | 6272 | Crankshaft 60X Sensor Low Reference | I | - |
| C | 0.5 | VT/D-BU | 6270 | Crankshaft 60X Sensor Voltage | I | - |

## B26 Crankshaft Position Sensor (LML)

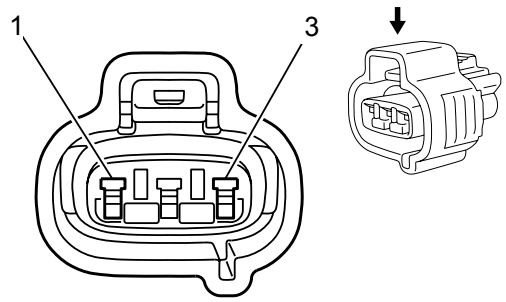


### Connector Part Information

Harness Type: Engine

OEM Connector: 6248-5317

Service Connector: 13576413

Description: 3-Way F Sealed (GY)

### *Terminal Part Information*

| Terminal Type ID | Terminated Lead | Diagnostic Test Probe | Terminal Removal Tool | Service Terminal | Tray | Core Crimp | Insulation Crimp |
|---|---|---|---|---|---|---|---|
| I | Pending | Pending | Pending | Not Available | Not Available | Not Available | Not Available |

### *B26 Crankshaft Position Sensor (LML)*

| Pin | Size | Color | Circuit | Function | Terminal Type ID | Option |
|---|---|---|---|---|---|---|
| 1 | 0 | WH/BK | 6271 | Crankshaft 60X Sensor Signal | I | LML |
| 2 | 0 | GY/BK | 6272 | Crankshaft 60X Sensor Low Reference | I | LML |
| 3 | 0 | VT/WH | 6270 | Crankshaft 60X Sensor Voltage | I | LML |

## B33 Engine Coolant Level Switch

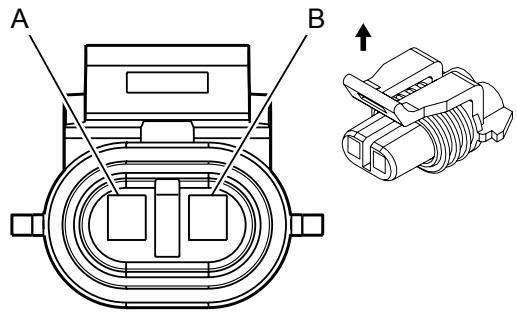


### Connector Part Information

Harness Type: Engine

OEM Connector: 12052641

Service Connector: 13586114

Description: 2-Way F 150 Metri Pack Series (BK)

### *Terminal Part Information*

| Terminal Type ID | Terminated Lead | Diagnostic Test Probe | Terminal Removal Tool | Service Terminal | Tray | Core Crimp | Insulation Crimp |
|---|---|---|---|---|---|---|---|
| I | 13575427 | J-35616-14 (GN) | J-38125-12A | 12048074 | 2 | E | 1 |

### *B33 Engine Coolant Level Switch*

| Pin | Size | Color | Circuit | Function | Terminal Type ID | Option |
|---|---|---|---|---|---|---|
| A | 0.5 | D-BU/YE | 68 | Low Coolant Level Indicator Control | I | - |
| B | 0.75 | BK/WH | 451 | Signal Ground | I | - |

## B34A Engine Coolant Temperature Sensor 1 (LML)

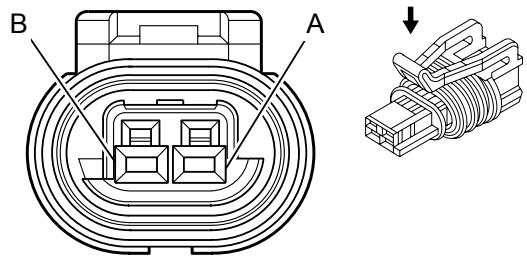


### Connector Part Information

Harness Type: Engine

OEM Connector: 15449028

Service Connector: 88987993

Description: 2-Way F 150 GT Series, Sealed (BK)

### *Terminal Part Information*

| Terminal Type ID | Terminated Lead | Diagnostic Test Probe | Terminal Removal Tool | Service Terminal | Tray | Core Crimp | Insulation Crimp |
|---|---|---|---|---|---|---|---|
| I | Pending | J-35616-2A (GY) | J-38125-553 | 15326267 | 19 | Not Available | Not Available |

### *B34A Engine Coolant Temperature Sensor 1 (LML)*

| Pin | Size | Color | Circuit | Function | Terminal Type ID | Option |
|---|---|---|---|---|---|---|
| A | 0 | YE | 410 | Engine Coolant Temperature Sensor Signal | I | LML |
| B | 0 | | 2761 | Coolant Temperature Sensor Low Reference | I | LML |

## B34 Engine Coolant Temperature Sensor (L96)

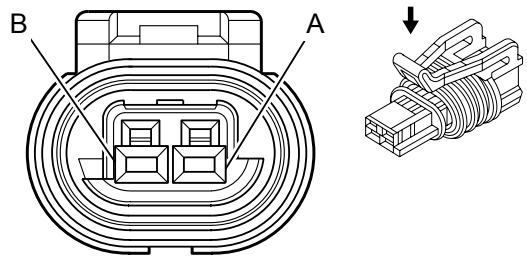


### Connector Part Information

Harness Type: Engine

OEM Connector: 15449028

Service Connector: 88987993

Description: 2-Way F 150 GT Series, Sealed (BK)

### *Terminal Part Information*

| Terminal Type ID | Terminated Lead | Diagnostic Test Probe | Terminal Removal Tool | Service Terminal | Tray | Core Crimp | Insulation Crimp |
|---|---|---|---|---|---|---|---|
| I | 13576360 | J-35616-2A (GY) | J-38125-553 | 15326267 | 19 | E | 4 |

### *B34 Engine Coolant Temperature Sensor (L96)*

| Pin | Size | Color | Circuit | Function | Terminal Type ID | Option |
|---|---|---|---|---|---|---|
| A | 0.5 | BK/BN | 2761 | Coolant Temperature Sensor Low Reference | I | - |
| B | 0.5 | D-BU | 410 | Engine Coolant Temperature Sensor Signal | I | - |

## B34 Engine Coolant Temperature Sensor

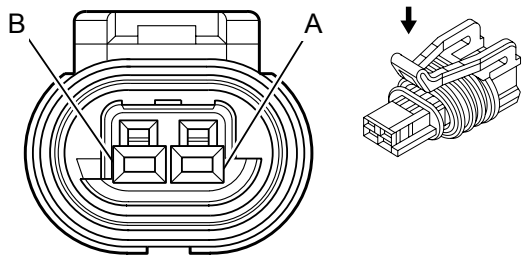


### Connector Part Information

Harness Type: Engine

OEM Connector: 15449028

Service Connector: 88987993

Description: 2-Way F 150 GT Series, Sealed (BK)

### *Terminal Part Information*

| Terminal Type ID | Terminated Lead | Diagnostic Test Probe | Terminal Removal Tool | Service Terminal | Tray | Core Crimp | Insulation Crimp |
|---|---|---|---|---|---|---|---|
| I | 13576360 | J-35616-2A (GY) | J-38125-553 | 15326267 | 19 | E | 4 |

### *B34 Engine Coolant Temperature Sensor*

| Pin | Size | Color | Circuit | Function | Terminal Type ID | Option |
|---|---|---|---|---|---|---|
| A | 0.5 | BK/BN | 2761 | Coolant Temperature Sensor Low Reference | I | - |
| B | 0.5 | D-BU | 410 | Engine Coolant Temperature Sensor Signal | I | - |

## B34 Engine Coolant Temperature Sensor

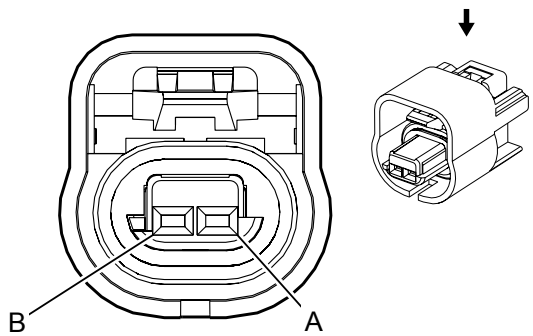


### Connector Part Information

Harness Type: Engine

OEM Connector: 15355317

Service Connector: 19178093

Description: 2-Way F 150 GT Series, Sealed (BK)

### *Terminal Part Information*

| Terminal Type ID | Terminated Lead | Diagnostic Test Probe | Terminal Removal Tool | Service Terminal | Tray | Core Crimp | Insulation Crimp |
|---|---|---|---|---|---|---|---|
| I | 13576360 | J-35616-2A (GY) | J-38125-553 | 15326267 | 19 | E | 4 |

### *B34 Engine Coolant Temperature Sensor*

| Pin | Size | Color | Circuit | Function | Terminal Type ID | Option |
|---|---|---|---|---|---|---|
| A | 0.5 | BK/BN | 2761 | Coolant Temperature Sensor Low Reference | I | - |
| B | 0.5 | D-BU | 410 | Engine Coolant Temperature Sensor Signal | I | - |

## B35 Engine Oil Level Switch

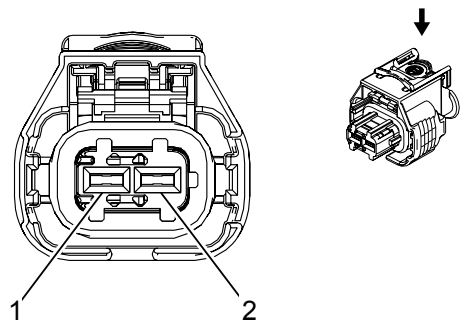


### Connector Part Information

Harness Type: Engine

OEM Connector: 13930085

Service Connector: Not Available

Description: 2-Way F 2.8 Series, Sealed (BK)

### *Terminal Part Information*

| Terminal Type ID | Terminated Lead | Diagnostic Test Probe | Terminal Removal Tool | Service Terminal | Tray | Core Crimp | Insulation Crimp |
|---|---|---|---|---|---|---|---|
| I | 13576381 | J-35616-35 (VT) | J-38125-561 | 1928498056 | 8 | E | 1 |

### *B35 Engine Oil Level Switch*

| Pin | Size | Color | Circuit | Function | Terminal Type ID | Option |
|---|---|---|---|---|---|---|
| 1 | 0.5 | BK/WH | 451 | Signal Ground | I | - |
| 2 | 0.5 | BN/L-GN | 1174 | Oil Level Switch Signal | I | - |

## B35 Engine Oil Level Switch (LML)

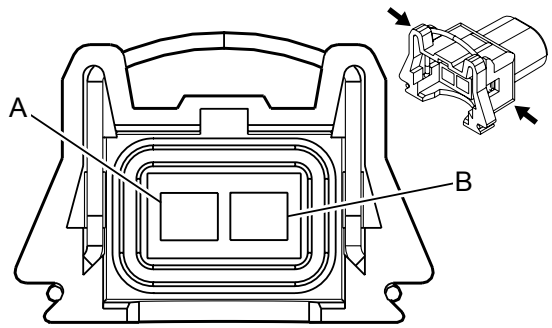


### Connector Part Information

Harness Type: Engine

OEM Connector: 12129140

Service Connector: 12085491

Description: 2-Way F 280 Metri Pack.1 , Pull To Seat (BK)

### *Terminal Part Information*

| Terminal Type ID | Terminated Lead | Diagnostic Test Probe | Terminal Removal Tool | Service Terminal | Tray | Core Crimp | Insulation Crimp |
|---|---|---|---|---|---|---|---|
| I | Pending | J-35616-4A (PU) | J-38125-559 | 12077939 | 18 | Not Available | Not Available |

### *B35 Engine Oil Level Switch (LML)*

| Pin | Size | Color | Circuit | Function | Terminal Type ID | Option |
|---|---|---|---|---|---|---|
| A | 0 | BR | 1174 | Oil Level Switch Signal | I | LML |
| B | 0 | BK/WH | 451 | Signal Ground | I | LML |

## B37B Engine Oil Pressure Sensor (L96)

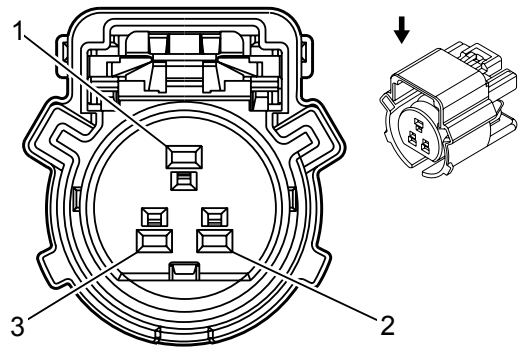


### Connector Part Information

Harness Type: Engine

OEM Connector: 13589761

Service Connector: 13501882

Description: 3-Way F 150 GT Series, Sealed (BK)

### *Terminal Part Information*

| Terminal Type ID | Terminated Lead | Diagnostic Test Probe | Terminal Removal Tool | Service Terminal | Tray | Core Crimp | Insulation Crimp |
|---|---|---|---|---|---|---|---|
| I | 13575298 | J-35616-2A (GY) | J-38125-553 | 12191819 | 8 | E | 1 |

### *B37B Engine Oil Pressure Sensor (L96)*

| Pin | Size | Color | Circuit | Function | Terminal Type ID | Option |
|---|---|---|---|---|---|---|
| 1 | 0.5 | YE/BN | 331 | Oil Pressure Sensor Signal | I | - |
| 2 | 0.5 | WH/RD | 2705 | Oil Pressure Sensor 5 Volt Reference | I | - |
| 3 | 0.5 | BK/PU | 2755 | Oil Pressure Sensor Low Reference | I | - |

## B37B Engine Oil Pressure Sensor

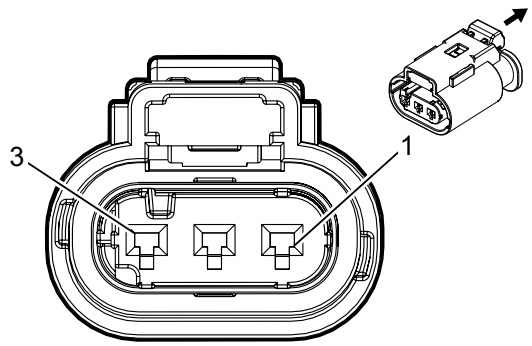


### Connector Part Information

Harness Type: Engine

OEM Connector: 13889776

Service Connector: 19301717

Description: 3-Way F 1.2 MLK Series, Sealed (BK)

### *Terminal Part Information*

| Terminal Type ID | Terminated Lead | Diagnostic Test Probe | Terminal Removal Tool | Service Terminal | Tray | Core Crimp | Insulation Crimp |
|---|---|---|---|---|---|---|---|
| I | Not Available | Not Available | Not Available | Not Available | Not Available | Not Available | Not Available |

### *B37B Engine Oil Pressure Sensor*

| Pin | Size | Color | Circuit | Function | Terminal Type ID | Option |
|---|---|---|---|---|---|---|
| 1 | 0.5 | YE/BN | 331 | Oil Pressure Sensor Signal | I | - |
| 2 | 0.5 | BK/PU | 2755 | Oil Pressure Sensor Low Reference | I | - |
| 3 | 0.5 | WH/RD | 2705 | Oil Pressure Sensor 5 Volt Reference | I | - |

## B37B Engine Oil Pressure Sensor (LML)

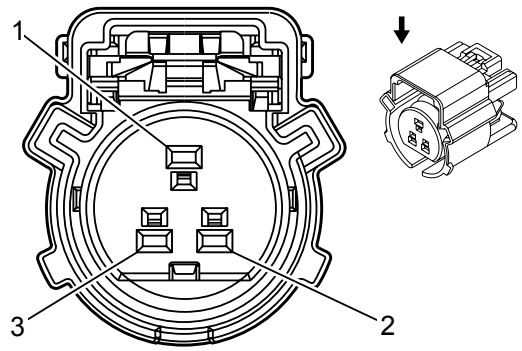


### Connector Part Information

Harness Type: Engine

OEM Connector: 13589761

Service Connector: 13501882

Description: 3-Way F 150 GT Series, Sealed (BK)

### *Terminal Part Information*

| Terminal Type ID | Terminated Lead | Diagnostic Test Probe | Terminal Removal Tool | Service Terminal | Tray | Core Crimp | Insulation Crimp |
|---|---|---|---|---|---|---|---|
| I | Pending | J-35616-2A (GY) | J-38125-553 | 12191819 | 8 | Not Available | Not Available |

### *B37B Engine Oil Pressure Sensor (LML)*

| Pin | Size | Color | Circuit | Function | Terminal Type ID | Option |
|---|---|---|---|---|---|---|
| 1 | 0 | WH | 331 | Oil Pressure Sensor Signal | I | LML |
| 2 | 0 | GY | 2705 | Oil Pressure Sensor 5 Volt Reference | I | LML |
| 3 | 0 | BK | 2755 | Oil Pressure Sensor Low Reference | I | LML |

## B47B Fuel Rail Pressure Sensor (LML)

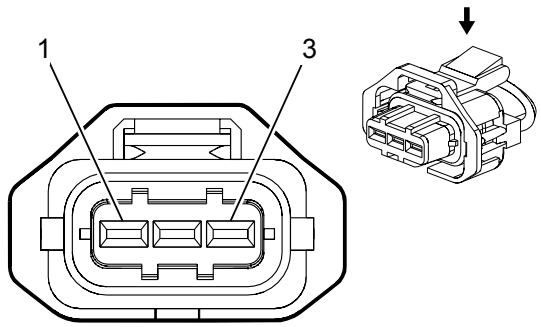


### Connector Part Information

Harness Type: Fuel Pressure Sensor Jumper

OEM Connector: 1928403968

Service Connector: 13584311

Description: 3-Way F 2.8 Series, Sealed (BK)

### *Terminal Part Information*

| Terminal Type ID | Terminated Lead | Diagnostic Test Probe | Terminal Removal Tool | Service Terminal | Tray | Core Crimp | Insulation Crimp |
|---|---|---|---|---|---|---|---|
| I | Pending | Pending | Pending | Not Available | Not Available | Not Available | Not Available |

### *B47B Fuel Rail Pressure Sensor (LML)*

| Pin | Size | Color | Circuit | Function | Terminal Type ID | Option |
|---|---|---|---|---|---|---|
| 1 | 0.5 | OG/BK | 2919 | Fuel Rail Pressure Sensor Low Reference | I | LML |
| 2 | 0.5 | YE | 2918 | Fuel Rail Pressure Sensor Signal | I | LML |
| 3 | 0.5 | | 2917 | Fuel Rail Pressure Sensor (5) Volt Reference | I | LML |

## B47 Fuel Pressure Sensor

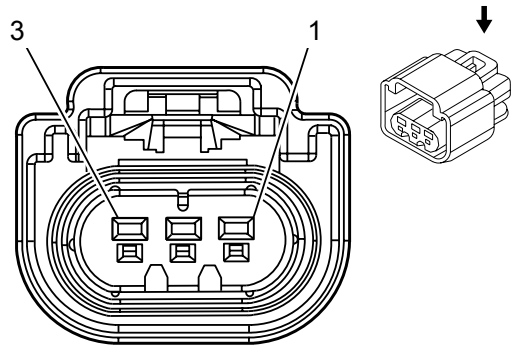


### Connector Part Information

Harness Type: Chassis

OEM Connector: 13511131

Service Connector: 19168035

Description: 3-Way F 150 GT Series, Sealed (BK)

### *Terminal Part Information*

| Terminal Type ID | Terminated Lead | Diagnostic Test Probe | Terminal Removal Tool | Service Terminal | Tray | Core Crimp | Insulation Crimp |
|---|---|---|---|---|---|---|---|
| I | 13575298 | J-35616-2A (GY) | J-38125-553 | 12191819 | 8 | E | 1 |

### *B47 Fuel Pressure Sensor*

| Pin | Size | Color | Circuit | Function | Terminal Type ID | Option |
|---|---|---|---|---|---|---|
| 1 | 0.5 | D-BU/WH | 7446 | Fuel Line Pressure Sensor Signal | I | - |
| 2 | 0.5 | BK/YE | 7447 | Fuel Line Pressure Sensor Low Reference | I | - |
| 3 | 0.5 | BN/RD | 7445 | Fuel Line Pressure Sensor 5V Reference | I | - |

## B48A Fuel Temperature Sensor 1 (LML)

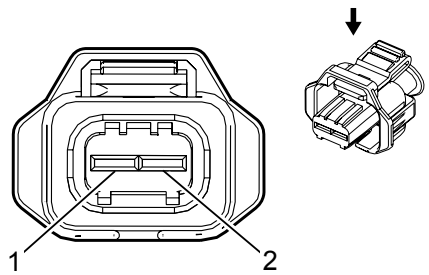


### Connector Part Information

Harness Type: Engine

OEM Connector: 1928404114

Service Connector: SEE NOTE

Description: 2-Way F 2.8 Series, Sealed (BK)

### *Terminal Part Information*

| Terminal Type ID | Terminated Lead | Diagnostic Test Probe | Terminal Removal Tool | Service Terminal | Tray | Core Crimp | Insulation Crimp |
|---|---|---|---|---|---|---|---|
| I | Pending | Pending | Pending | Not Available | Not Available | Not Available | Not Available |

### *B48A Fuel Temperature Sensor 1 (LML)*

| Pin | Size | Color | Circuit | Function | Terminal Type ID | Option |
|---|---|---|---|---|---|---|
| 1 | 0 | BR/GY | 7072 | Sensor Fuel Temperature 1 Signal | I | LML |
| 2 | 0 | BR/WH | 7073 | Sensor Fuel Temperature 1 Return | I | LML |

## B52C Heated Oxygen Sensor - Bank 1 Sensor 1

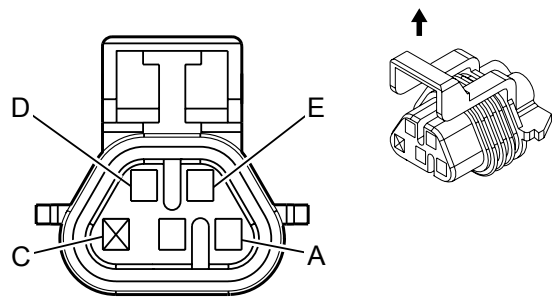


### Connector Part Information

Harness Type: Engine

OEM Connector: 12146047

Service Connector: 12146047

Description: 5-Way F 150 Metri Pack Series, Sealed (BK)

### *Terminal Part Information*

| Terminal Type ID | Terminated Lead | Diagnostic Test Probe | Terminal Removal Tool | Service Terminal | Tray | Core Crimp | Insulation Crimp |
|---|---|---|---|---|---|---|---|
| I | Not Available | J-35616-14 (GN) | J-38125-12A | 12160223 | 3 | E | 1 |
| II | 13575427 | J-35616-14 (GN) | J-38125-12A | 12048074 | 2 | E | 1 |

### *B52C Heated Oxygen Sensor - Bank 1 Sensor 1*

| Pin | Size | Color | Circuit | Function | Terminal Type ID | Option |
|---|---|---|---|---|---|---|
| A | 0.5 | WH/BK | 3111 | Heated Oxygen Sensor Low Signal Bank 1 Sensor (1) | I | - |
| B | 0.5 | VT/GY | 3110 | Heated Oxygen Sensor High Signal Bank 1 Sensor (1) | I | - |
| C | - | - | - | Not Occupied | - | - |
| D | 0.75 | VT/D-BU | 5293 | Powertrain Main Relay Fused Supply (4) | II | - |
| E | 0.5 | GY/WH | 3113 | Heated Oxygen Sensor Heater Low Control Bank 1 Sensor (1) | I | - |

## B52C Heated Oxygen Sensor - Bank 1 Sensor 1

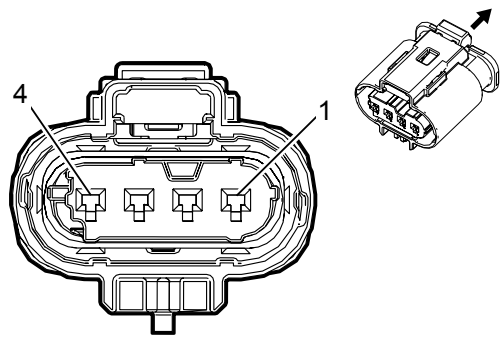


### Connector Part Information

Harness Type: Engine

OEM Connector: 13869004

Service Connector: 19301716

Description: 4-Way F 1.2 MLK Series, Sealed (D-GY)

### *Terminal Part Information*

| Terminal Type ID | Terminated Lead | Diagnostic Test Probe | Terminal Removal Tool | Service Terminal | Tray | Core Crimp | Insulation Crimp |
|---|---|---|---|---|---|---|---|
| I | Not Available | Not Available | Not Available | Not Available | Not Available | Not Available | Not Available |

### *B52C Heated Oxygen Sensor - Bank 1 Sensor 1*

| Pin | Size | Color | Circuit | Function | Terminal Type ID | Option |
|---|---|---|---|---|---|---|
| 1 | 0.5 | GY/WH | 3113 | Heated Oxygen Sensor Heater Low Control Bank 1 Sensor (1) | I | - |
| 2 | 0.5 | VT/D-BU | 5293 | Powertrain Main Relay Fused Supply (4) | I | - |
| 3 | 0.5 | WH/BK | 3111 | Heated Oxygen Sensor Low Signal Bank 1 Sensor (1) | I | - |
| 4 | 0.5 | VT/GY | 3110 | Heated Oxygen Sensor High Signal Bank 1 Sensor (1) | I | - |

## B52C Heated Oxygen Sensor - Bank 1 Sensor 1

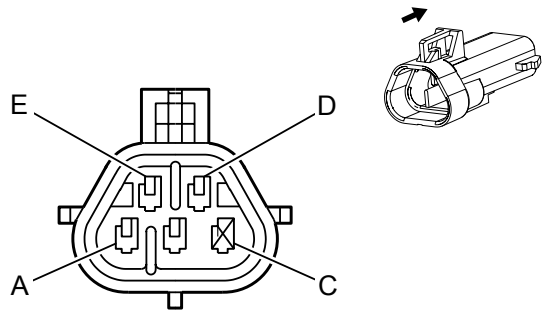


### Connector Part Information

Harness Type: Engine

OEM Connector: 12092839

Service Connector: 13585848

Description: 5-Way M 150 Metri Pack Series, Sealed (BK)

### *Terminal Part Information*

| Terminal Type ID | Terminated Lead | Diagnostic Test Probe | Terminal Removal Tool | Service Terminal | Tray | Core Crimp | Insulation Crimp |
|---|---|---|---|---|---|---|---|
| I | Pending | J-35616-3 (GY) | J-38125-12A | 12045773 | 2 | E | 1 |

### *B52C Heated Oxygen Sensor - Bank 1 Sensor 1*

| Pin | Size | Color | Circuit | Function | Terminal Type ID | Option |
|---|---|---|---|---|---|---|
| A | 0.5 | WH/BK | 3111 | Heated Oxygen Sensor Low Signal Bank 1 Sensor (1) | I | - |
| B | 0.5 | VT/GY | 3110 | Heated Oxygen Sensor High Signal Bank 1 Sensor (1) | I | - |
| C | - | - | - | Not Occupied | - | - |
| D | 0.75 | VT/D-BU | 5293 | Powertrain Main Relay Fused Supply (4) | I | - |
| E | 0.5 | GY/WH | 3113 | Heated Oxygen Sensor Heater Low Control Bank 1 Sensor (1) | I | - |

## B52D Heated Oxygen Sensor - Bank 1 Sensor 2

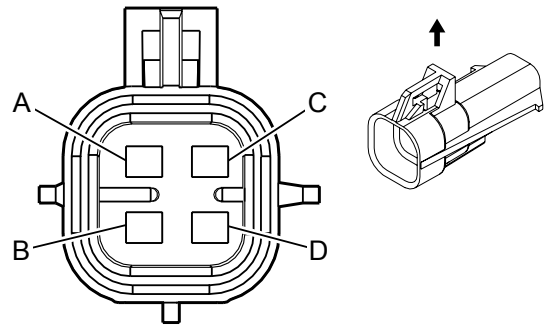


### Connector Part Information

Harness Type: Engine

OEM Connector: 15326423

Service Connector: SEE NOTE

Description: 4-Way M 150 Metri Pack Series, Sealed (GY)

Harness Type: Chassis

OEM Connector: 15326423

Service Connector: SEE NOTE

Description: 4-Way M 150 Metri Pack Series, Sealed (GY)

### *Terminal Part Information*

| Terminal Type ID | Terminated Lead | Diagnostic Test Probe | Terminal Removal Tool | Service Terminal | Tray | Core Crimp | Insulation Crimp |
|---|---|---|---|---|---|---|---|
| I | Pending | J-35616-3 (GY) | J-38125-12A | 12045773 | 2 | E | 1 |

### *B52D Heated Oxygen Sensor - Bank 1 Sensor 2*

| Pin | Size | Color | Circuit | Function | Terminal Type ID | Option |
|---|---|---|---|---|---|---|
| A | 0.5 | WH/YE | 3121 | Heated Oxygen Sensor Low Signal Bank 1 Sensor (2) | I | - |
| B | 0.5 | VT/D-BU | 3120 | Heated Oxygen Sensor High Signal Bank 1 Sensor (2) | I | - |
| C | 0.5 | GY/WH | 3122 | Heated Oxygen Sensor Heater Low Control Bank 1 Sensor (2) | I | - |
| D | 0.5 | VT/D-BU | 5294 | Powertrain Main Relay Fused Supply (5) | I | - |

## B52D Heated Oxygen Sensor - Bank 1 Sensor 2

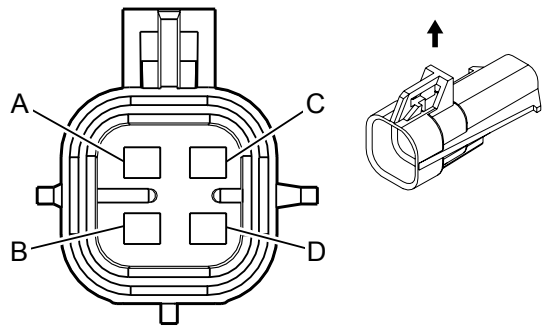


### Connector Part Information

Harness Type: Chassis

OEM Connector: 15326423

Service Connector: SEE NOTE

Description: 4-Way M 150 Metri Pack Series, Sealed (GY)

Harness Type: Engine

OEM Connector: 15326423

Service Connector: SEE NOTE

Description: 4-Way M 150 Metri Pack Series, Sealed (GY)

### *Terminal Part Information*

| Terminal Type ID | Terminated Lead | Diagnostic Test Probe | Terminal Removal Tool | Service Terminal | Tray | Core Crimp | Insulation Crimp |
|---|---|---|---|---|---|---|---|
| I | Not Available | J-35616-3 (GY) | J-38125-12A | 12045773 | 2 | E | 1 |
| II | 13575420 | J-35616-3 (GY) | J-38125-12A | 12045773 | 2 | E | 1 |

### *B52D Heated Oxygen Sensor - Bank 1 Sensor 2*

| Pin | Size | Color | Circuit | Function | Terminal Type ID | Option |
|---|---|---|---|---|---|---|
| A | 0.5 | WH/YE | 3121 | Heated Oxygen Sensor Low Signal Bank 1 Sensor (2) | I | - |
| B | 0.5<br>0.5 | VT<br>VT/D-BU | 3120<br>3120 | Heated Oxygen Sensor High Signal Bank 1 Sensor (2)<br>Heated Oxygen Sensor High Signal Bank 1 Sensor (2) | I | - |
| C | 0.5 | GY/WH | 3122 | Heated Oxygen Sensor Heater Low Control Bank 1 Sensor (2) | I | - |
| D | 0.5 | VT/D-BU | 5294 | Powertrain Main Relay Fused Supply (5) | I | - |

## B52E Heated Oxygen Sensor - Bank 2 Sensor 1

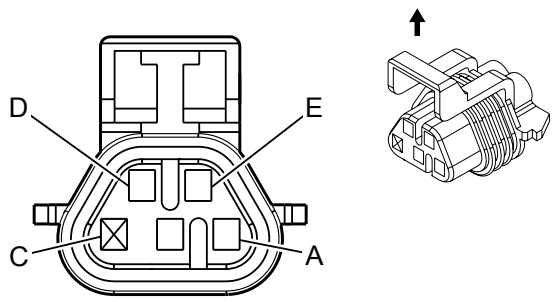


### Connector Part Information

Harness Type: Engine

OEM Connector: 12146047

Service Connector: 12146047

Description: 5-Way F 150 Metri Pack Series, Sealed (BK)

### *Terminal Part Information*

| Terminal Type ID | Terminated Lead | Diagnostic Test Probe | Terminal Removal Tool | Service Terminal | Tray | Core Crimp | Insulation Crimp |
|---|---|---|---|---|---|---|---|
| I | Not Available | J-35616-14 (GN) | J-38125-12A | 12160223 | 3 | E | 1 |
| II | 13575427 | J-35616-14 (GN) | J-38125-12A | 12048074 | 2 | E | 1 |

### *B52E Heated Oxygen Sensor - Bank 2 Sensor 1*

| Pin | Size | Color | Circuit | Function | Terminal Type ID | Option |
|---|---|---|---|---|---|---|
| A | 0.5 | YE/WH | 3211 | Heated Oxygen Sensor Low Signal Bank 2 Sensor (1) | I | - |
| B | 0.5 | VT/WH | 3210 | Heated Oxygen Sensor High Signal Bank 2 Sensor (1) | I | - |
| C | - | - | - | Not Occupied | - | - |
| D | 0.75 | VT/D-BU | 5293 | Powertrain Main Relay Fused Supply (4) | II | - |
| E | 0.5 | L-GN/YE | 3212 | Heated Oxygen Sensor Heater Low Control Bank 2 Sensor (1) | I | - |

## B52E Heated Oxygen Sensor - Bank 2 Sensor 1

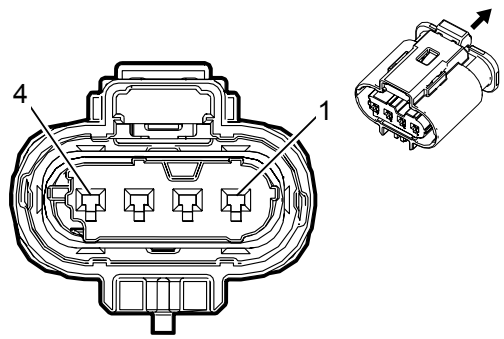


### Connector Part Information

Harness Type: Engine

OEM Connector: 13869004

Service Connector: 19301716

Description: 4-Way F 1.2 MLK Series, Sealed (D-GY)

### *Terminal Part Information*

| Terminal Type ID | Terminated Lead | Diagnostic Test Probe | Terminal Removal Tool | Service Terminal | Tray | Core Crimp | Insulation Crimp |
|---|---|---|---|---|---|---|---|
| I | Not Available | Not Available | Not Available | Not Available | Not Available | Not Available | Not Available |

### *B52E Heated Oxygen Sensor - Bank 2 Sensor 1*

| Pin | Size | Color | Circuit | Function | Terminal Type ID | Option |
|---|---|---|---|---|---|---|
| 1 | 0.5 | L-GN/YE | 3212 | Heated Oxygen Sensor Heater Low Control Bank 2 Sensor (1) | I | - |
| 2 | 0.5 | VT/D-BU | 5293 | Powertrain Main Relay Fused Supply (4) | I | - |
| 3 | 0.5 | YE/WH | 3211 | Heated Oxygen Sensor Low Signal Bank 2 Sensor (1) | I | - |
| 4 | 0.5 | VT/WH | 3210 | Heated Oxygen Sensor High Signal Bank 2 Sensor (1) | I | - |

## B52E Heated Oxygen Sensor - Bank 2 Sensor 1

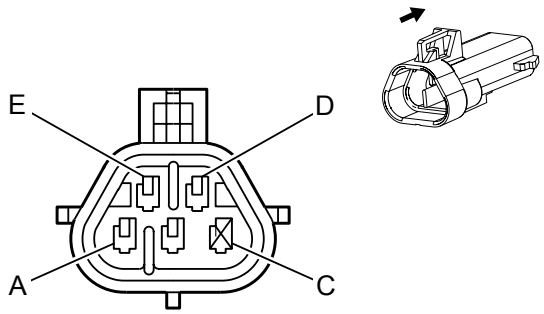


### Connector Part Information

Harness Type: Engine

OEM Connector: 12092839

Service Connector: 13585848

Description: 5-Way M 150 Metri Pack Series, Sealed (BK)

### *Terminal Part Information*

| Terminal Type ID | Terminated Lead | Diagnostic Test Probe | Terminal Removal Tool | Service Terminal | Tray | Core Crimp | Insulation Crimp |
|---|---|---|---|---|---|---|---|
| I | Pending | J-35616-3 (GY) | J-38125-12A | 12045773 | 2 | E | 1 |

### *B52E Heated Oxygen Sensor - Bank 2 Sensor 1*

| Pin | Size | Color | Circuit | Function | Terminal Type ID | Option |
|---|---|---|---|---|---|---|
| A | 0.5 | YE/WH | 3211 | Heated Oxygen Sensor Low Signal Bank 2 Sensor (1) | I | - |
| B | 0.5 | VT/WH | 3210 | Heated Oxygen Sensor High Signal Bank 2 Sensor (1) | I | - |
| C | - | - | - | Not Occupied | - | - |
| D | 0.75 | VT/D-BU | 5293 | Powertrain Main Relay Fused Supply (4) | I | - |
| E | 0.5 | L-GN/YE | 3212 | Heated Oxygen Sensor Heater Low Control Bank 2 Sensor (1) | I | - |

## B52F Heated Oxygen Sensor - Bank 2 Sensor 2

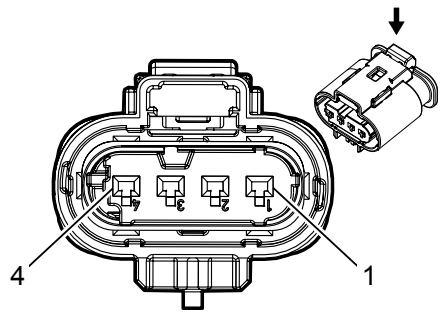


### Connector Part Information

Harness Type: Engine

OEM Connector: 13815348

Service Connector: 13587298

Description: 4-Way F 1.2 MLK Series, Sealed (L-GY)

### *Terminal Part Information*

| Terminal Type ID | Terminated Lead | Diagnostic Test Probe | Terminal Removal Tool | Service Terminal | Tray | Core Crimp | Insulation Crimp |
|---|---|---|---|---|---|---|---|
| I | Not Available | Not Available | Not Available | Not Available | Not Available | Not Available | Not Available |

### *B52F Heated Oxygen Sensor - Bank 2 Sensor 2*

| Pin | Size | Color | Circuit | Function | Terminal Type ID | Option |
|---|---|---|---|---|---|---|
| 1 | 0.5 | WH/BN | 3223 | Heated Oxygen Sensor Heater Low Control Bank 2 Sensor (2) | I | - |
| 2 | 0.5 | VT/D-BU | 5294 | Powertrain Main Relay Fused Supply (5) | I | - |
| 3 | 0.5 | YE/D-BU | 3221 | Heated Oxygen Sensor Low Signal Bank 2 Sensor (2) | I | - |
| 4 | 0.5 | VT/L-GN | 3220 | Heated Oxygen Sensor High Signal Bank 2 Sensor (2) | I | - |

## B52F Heated Oxygen Sensor - Bank 2 Sensor 2

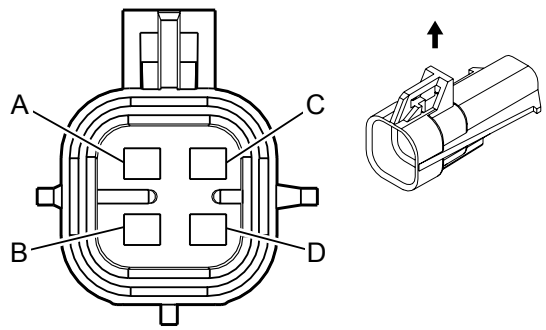


### Connector Part Information

Harness Type: Engine

OEM Connector: 15326423

Service Connector: SEE NOTE

Description: 4-Way M 150 Metri Pack Series, Sealed (GY)

### *Terminal Part Information*

| Terminal Type ID | Terminated Lead | Diagnostic Test Probe | Terminal Removal Tool | Service Terminal | Tray | Core Crimp | Insulation Crimp |
|---|---|---|---|---|---|---|---|
| I | Pending | J-35616-3 (GY) | J-38125-12A | 12045773 | 2 | E | 1 |

### *B52F Heated Oxygen Sensor - Bank 2 Sensor 2*

| Pin | Size | Color | Circuit | Function | Terminal Type ID | Option |
|---|---|---|---|---|---|---|
| A | 0.5 | YE/D-BU | 3221 | Heated Oxygen Sensor Low Signal Bank 2 Sensor (2) | I | - |
| B | 0.5 | VT/L-GN | 3220 | Heated Oxygen Sensor High Signal Bank 2 Sensor (2) | I | - |
| C | 0.5 | WH/BN | 3223 | Heated Oxygen Sensor Heater Low Control Bank 2 Sensor (2) | I | - |
| D | 0.5 | VT/D-BU | 5294 | Powertrain Main Relay Fused Supply (5) | I | - |

## B55 Hood Ajar Switch

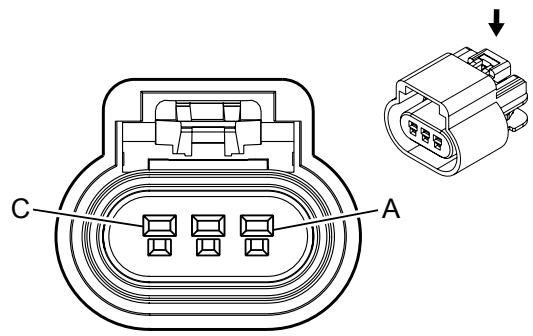


### Connector Part Information

Harness Type: Forward Lamp

OEM Connector: 13519047

Service Connector: SEE NOTE

Description: 3-Way F 150 GT Series, Sealed (BK)

### *Terminal Part Information*

| Terminal Type ID | Terminated Lead | Diagnostic Test Probe | Terminal Removal Tool | Service Terminal | Tray | Core Crimp | Insulation Crimp |
|---|---|---|---|---|---|---|---|
| I | 13575298 | J-35616-2A (GY) | J-38125-553 | 12191819 | 8 | E | 1 |
| II | 13575412 | J-35616-2A (GY) | J-38125-553 | 12191819 | 8 | 2 | 1 |

### *B55 Hood Ajar Switch*

| Pin | Size | Color | Circuit | Function | Terminal Type ID | Option |
|---|---|---|---|---|---|---|
| A | - | - | - | Not Occupied | - | - |
| B | 0.5 | BN/L-GN | 109 | Hood Ajar Switch Signal | I | - |
| C | 1 | BK | 250 | Ground | II | - |

## B59L Front Impact Sensor - Left (1500)

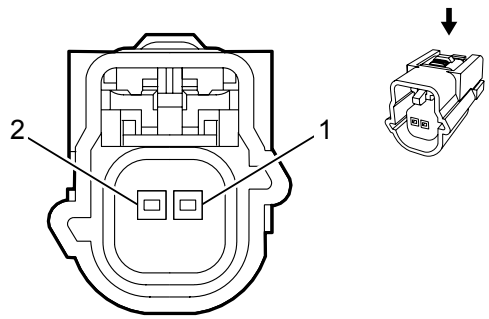


### Connector Part Information

Harness Type: Forward Lamp

OEM Connector: 13593078

Service Connector: 13577629

Description: 2-Way F 0.64 Series, Sealed (L-GY)

### *Terminal Part Information*

| Terminal Type ID | Terminated Lead | Diagnostic Test Probe | Terminal Removal Tool | Service Terminal | Tray | Core Crimp | Insulation Crimp |
|---|---|---|---|---|---|---|---|
| I | 13327120 | J-35616-64B (L-BU) | J-38125-215A | SAIT-A03T-M064 | 14 | P | P |

### *B59L Front Impact Sensor - Left (1500)*

| Pin | Size | Color | Circuit | Function | Terminal Type ID | Option |
|---|---|---|---|---|---|---|
| 1 | 0.5 | OG/YE | 354 | Left Front Discriminating Sensor Signal | I | - |
| 2 | 0.5 | BK/OG | 5045 | Left Front Discriminating Sensor Low Reference | I | - |

## B59R Front Impact Sensor - Right (1500)

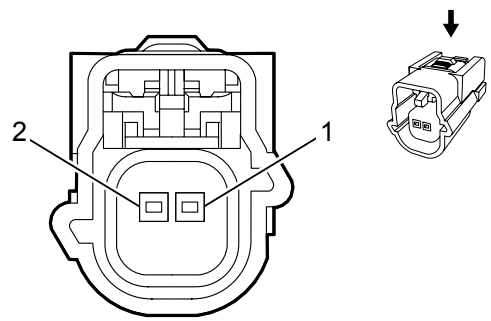


### Connector Part Information

Harness Type: Forward Lamp

OEM Connector: 13593078

Service Connector: 13577629

Description: 2-Way F 0.64 Series, Sealed (L-GY)

### *Terminal Part Information*

| Terminal Type ID | Terminated Lead | Diagnostic Test Probe | Terminal Removal Tool | Service Terminal | Tray | Core Crimp | Insulation Crimp |
|---|---|---|---|---|---|---|---|
| I | 13327120 | J-35616-64B (L-BU) | J-38125-215A | SAIT-A03T-M064 | 14 | P | P |

### *B59R Front Impact Sensor - Right (1500)*

| Pin | Size | Color | Circuit | Function | Terminal Type ID | Option |
|---|---|---|---|---|---|---|
| 1 | 0.5 | OG/L-GN | 1409 | Right Front Discriminating Sensor Signal | I | - |
| 2 | 0.5 | BK/OG | 5600 | Right Front Discriminating Sensor Low Reference | I | - |

## B59 Front Impact Sensor

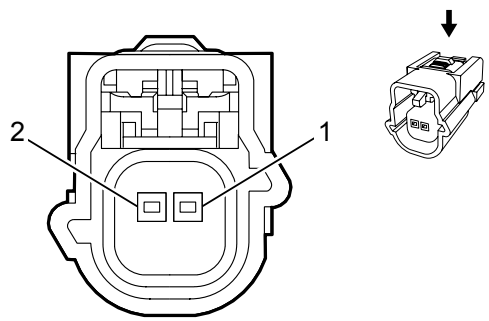


### Connector Part Information

Harness Type: Forward Lamp

OEM Connector: 13593078

Service Connector: 13577629

Description: 2-Way F 0.64 Series, Sealed (L-GY)

### *Terminal Part Information*

| Terminal Type ID | Terminated Lead | Diagnostic Test Probe | Terminal Removal Tool | Service Terminal | Tray | Core Crimp | Insulation Crimp |
|---|---|---|---|---|---|---|---|
| I | 13327120 | J-35616-64B (L-BU) | J-38125-215A | SAIT-A03T-M064 | 14 | P | P |

### *B59 Front Impact Sensor*

| Pin | Size | Color | Circuit | Function | Terminal Type ID | Option |
|---|---|---|---|---|---|---|
| 1 | 0.5 | OG/GY | 6618 | Middle Front Discriminating Sensor Signal | I | - |
| 2 | 0.5 | BK/OG | 6619 | Middle Front Discriminating Sensor Low Reference | I | - |

## B60 Passenger Presence Detection Sensor

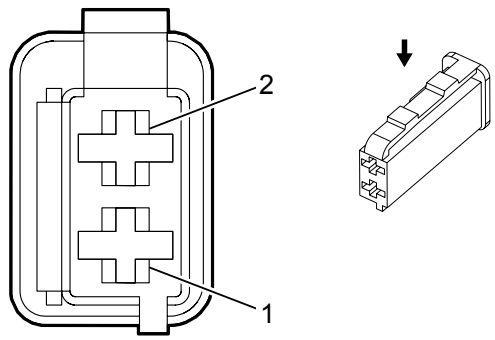


### Connector Part Information

Harness Type: Body

OEM Connector: 13670097

Service Connector: 13580951

Description: 2-Way F 1.6 Timer Series (BK)

### *Terminal Part Information*

| Terminal Type ID | Terminated Lead | Diagnostic Test Probe | Terminal Removal Tool | Service Terminal | Tray | Core Crimp | Insulation Crimp |
|---|---|---|---|---|---|---|---|
| I | Not Available | J-35616-14 (GN) | J-38125-560 | 962943-5 | 16 | Not Available | Not Available |

### *B60 Passenger Presence Detection Sensor*

| Pin | Size | Color | Circuit | Function | Terminal Type ID | Option |
|---|---|---|---|---|---|---|
| 1 | 0.35 | D-BU/RD | 5612 | Passenger Seat Belt Tension Sensor Voltage Reference | I | - |
| 2 | 0.35 | VT/OG | 5611 | Passenger Seat Belt Tension Sensor Signal | I | - |

## B60 Passenger Presence Sensor

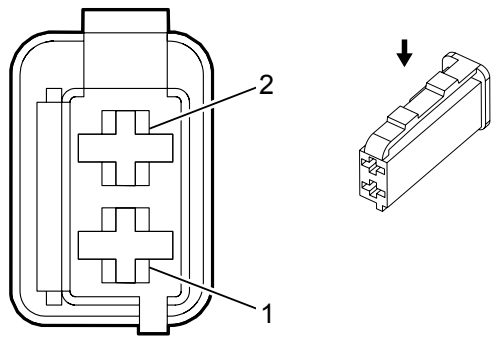


### Connector Part Information

Harness Type: Body

OEM Connector: 13670097

Service Connector: 13580951

Description: 2-Way F 1.6 Timer Series (BK)

### *Terminal Part Information*

| Terminal Type ID | Terminated Lead | Diagnostic Test Probe | Terminal Removal Tool | Service Terminal | Tray | Core Crimp | Insulation Crimp |
|---|---|---|---|---|---|---|---|
| I | Pending | J-35616-14 (GN) | J-38125-560 | 962943-5 | 16 | Not Available | Not Available |

### *B60 Passenger Presence Sensor*

| Pin | Size | Color | Circuit | Function | Terminal Type ID | Option |
|---|---|---|---|---|---|---|
| 1 | 0.35 | D-BU/RD | 5612 | Passenger Seat Belt Tension Sensor Voltage Reference | I | - |
| 2 | 0.35 | VT/OG | 5611 | Passenger Seat Belt Tension Sensor Signal | I | - |

## B62D Seat Position Sensor - Driver

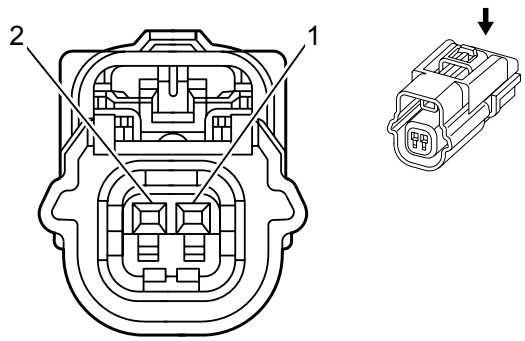


### Connector Part Information

Harness Type: Driver Seat Cushion

OEM Connector: 54390239

Service Connector: 13585856

Description: 2-Way F Kaizen 64 Series, Sealed (BK)

### *Terminal Part Information*

| Terminal Type ID | Terminated Lead | Diagnostic Test Probe | Terminal Removal Tool | Service Terminal | Tray | Core Crimp | Insulation Crimp |
|---|---|---|---|---|---|---|---|
| I | Not Available | Not Available | Not Available | Not Available | Not Available | Not Available | Not Available |

### *B62D Seat Position Sensor - Driver*

| Pin | Size | Color | Circuit | Function | Terminal Type ID | Option |
|---|---|---|---|---|---|---|
| 1 | 0.35 | BK/OG | 1363 | Driver Seat Belt Switch Low Reference | I | - |
| 2 | 0.35 | OG/L-GN | 5055 | Driver Seat Position Switch Signal | I | - |

## B62P Seat Position Sensor - Passenger

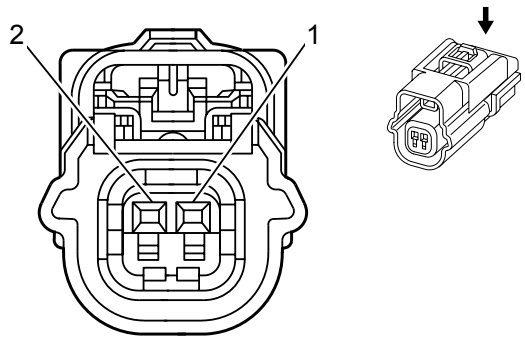


### Connector Part Information

Harness Type: Passenger Seat Cushion

OEM Connector: 54390239

Service Connector: 13585856

Description: 2-Way F Kaizen 64 Series, Sealed (BK)

### *Terminal Part Information*

| Terminal Type ID | Terminated Lead | Diagnostic Test Probe | Terminal Removal Tool | Service Terminal | Tray | Core Crimp | Insulation Crimp |
|---|---|---|---|---|---|---|---|
| I | Not Available | Not Available | Not Available | Not Available | Not Available | Not Available | Not Available |

### *B62P Seat Position Sensor - Passenger*

| Pin | Size | Color | Circuit | Function | Terminal Type ID | Option |
|---|---|---|---|---|---|---|
| 1 | 0.35 | BK/OG | 1361 | Passenger Seat Belt Switch Low Reference | I | - |
| 2 | 0.35 | OG/L-BU | 5056 | Passenger Seat Position Switch Signal | I | - |

## B63LF Side Impact Sensor - Left Front

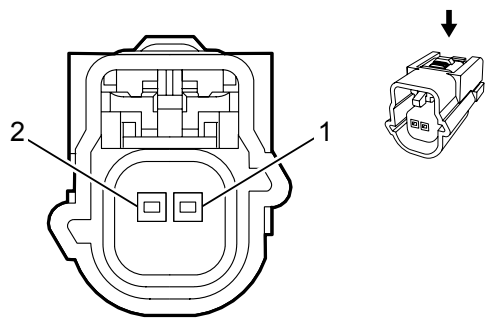


### Connector Part Information

Harness Type: Driver Door

OEM Connector: 13593078

Service Connector: 13577629

Description: 2-Way F 0.64 Series, Sealed (L-GY)

### *Terminal Part Information*

| Terminal Type ID | Terminated Lead | Diagnostic Test Probe | Terminal Removal Tool | Service Terminal | Tray | Core Crimp | Insulation Crimp |
|---|---|---|---|---|---|---|---|
| I | 13327120 | J-35616-64B (L-BU) | J-38125-215A | SAIT-A03T-M064 | 14 | P | P |

### *B63LF Side Impact Sensor - Left Front*

| Pin | Size | Color | Circuit | Function | Terminal Type ID | Option |
|---|---|---|---|---|---|---|
| 1 | 0.5 | OG/L-GN | 2132 | Left Front Side Impact Sensing Module Signal | I | - |
| 2 | 0.5 | BK/OG | 6628 | Left Front Side Impact Sensing Module Low Reference | I | - |

## B63LR Side Impact Sensor - Left Rear

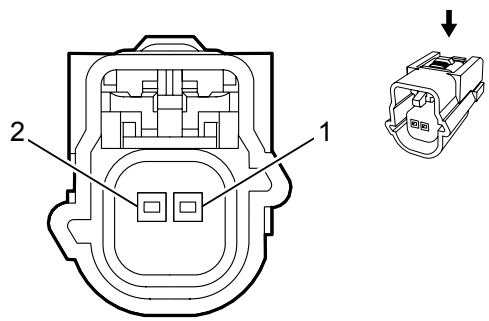


### Connector Part Information

Harness Type: Left Rear Door

OEM Connector: 13610095

Service Connector: 13585852

Description: 2-Way F 0.64 Series, Sealed (D-GY)

### *Terminal Part Information*

| Terminal Type ID | Terminated Lead | Diagnostic Test Probe | Terminal Removal Tool | Service Terminal | Tray | Core Crimp | Insulation Crimp |
|---|---|---|---|---|---|---|---|
| I | 13327120 | J-35616-64B (L-BU) | J-38125-215A | SAIT-A03T-M064 | 14 | P | P |

### *B63LR Side Impact Sensor - Left Rear*

| Pin | Size | Color | Circuit | Function | Terminal Type ID | Option |
|---|---|---|---|---|---|---|
| 1 | 0.5 | OG/D-BU | 6620 | Left Middle Side Impact Sensing Module Signal | I | - |
| 2 | 0.5 | BK/OG | 6621 | Left Middle Side Impact Sensing Module Low Reference | I | - |

## B63RF Side Impact Sensor - Right Front

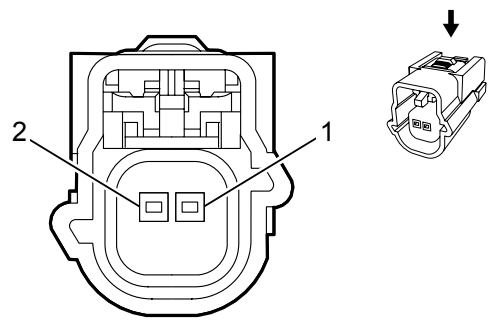


### Connector Part Information

Harness Type: Passenger Door

OEM Connector: 13593078

Service Connector: 13577629

Description: 2-Way F 0.64 Series, Sealed (L-GY)

### *Terminal Part Information*

| Terminal Type ID | Terminated Lead | Diagnostic Test Probe | Terminal Removal Tool | Service Terminal | Tray | Core Crimp | Insulation Crimp |
|---|---|---|---|---|---|---|---|
| I | 13327120 | J-35616-64B (L-BU) | J-38125-215A | SAIT-A03T-M064 | 14 | P | P |

### *B63RF Side Impact Sensor - Right Front*

| Pin | Size | Color | Circuit | Function | Terminal Type ID | Option |
|---|---|---|---|---|---|---|
| 1 | 0.5 | BN/OG | 2134 | Right Front Side Impact Sensing Module Signal | I | - |
| 2 | 0.5 | BK/OG | 6629 | Right Front Side Impact Sensing Module Low Reference | I | - |

## B63RR Side Impact Sensor - Right Rear

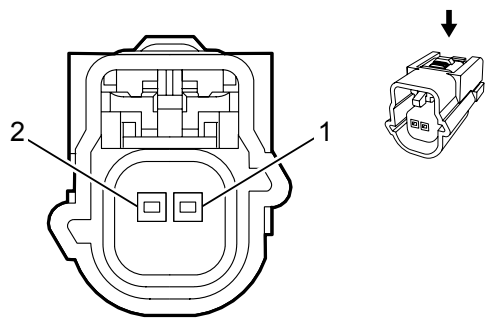


### Connector Part Information

Harness Type: Right Rear Door

OEM Connector: 13610095

Service Connector: 13585852

Description: 2-Way F 0.64 Series, Sealed (D-GY)

### *Terminal Part Information*

| Terminal Type ID | Terminated Lead | Diagnostic Test Probe | Terminal Removal Tool | Service Terminal | Tray | Core Crimp | Insulation Crimp |
|---|---|---|---|---|---|---|---|
| I | 13327120 | J-35616-64B (L-BU) | J-38125-215A | SAIT-A03T-M064 | 14 | P | P |

### *B63RR Side Impact Sensor - Right Rear*

| Pin | Size | Color | Circuit | Function | Terminal Type ID | Option |
|---|---|---|---|---|---|---|
| 1 | 0.5 | OG/VT | 6624 | Right Middle Side Impact Sensing Module Signal | I | - |
| 2 | 0.5 | BK/OG | 6625 | Right Middle Side Impact Sensing Module Low Reference | I | - |

## B68A Knock Sensor 1

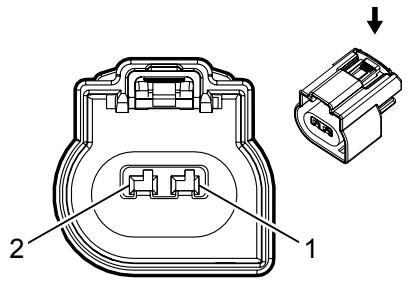


### Connector Part Information

Harness Type: Engine

OEM Connector: 13814755

Service Connector: 19301207

Description: 2-Way F 150 MX Series, Sealed (BK)

### *Terminal Part Information*

| Terminal Type ID | Terminated Lead | Diagnostic Test Probe | Terminal Removal Tool | Service Terminal | Tray | Core Crimp | Insulation Crimp |
|---|---|---|---|---|---|---|---|
| I | Not Available | Not Available | Not Available | Not Available | Not Available | Not Available | Not Available |

### *B68A Knock Sensor 1*

| Pin | Size | Color | Circuit | Function | Terminal Type ID | Option |
|---|---|---|---|---|---|---|
| 1 | 0.75 | VT/GY | 496 | Knock Sensor Signal (1) | I | - |
| 2 | 0.75 | BK/YE | 1716 | Knock Sensor Low Reference (1) | I | - |

## B68A Knock Sensor 1

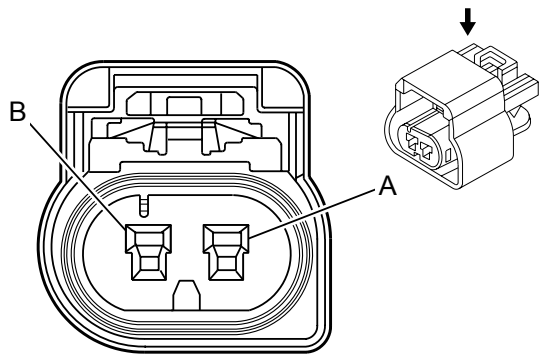


### Connector Part Information

Harness Type: Engine

OEM Connector: 15374222

Service Connector: SEE NOTE

Description: 2-Way F 150 GT Series, Sealed (NA)

### *Terminal Part Information*

| Terminal Type ID | Terminated Lead | Diagnostic Test Probe | Terminal Removal Tool | Service Terminal | Tray | Core Crimp | Insulation Crimp |
|---|---|---|---|---|---|---|---|
| I | 13575396 | J-35616-2A (GY) | J-38125-553 | 15326427 | 5 | 2 | 1 |

### *B68A Knock Sensor 1*

| Pin | Size | Color | Circuit | Function | Terminal Type ID | Option |
|---|---|---|---|---|---|---|
| A | 0.75 | VT/GY | 496 | Knock Sensor Signal (1) | I | - |
| B | 0.75 | BK/YE | 1716 | Knock Sensor Low Reference (1) | I | - |

## B68B Knock Sensor 2

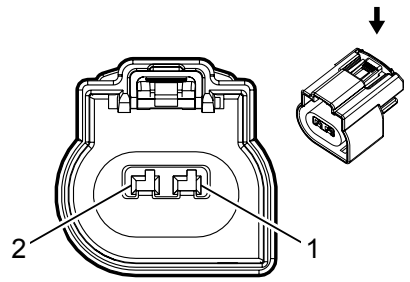


### Connector Part Information

Harness Type: Engine

OEM Connector: 13814755

Service Connector: 19301207

Description: 2-Way F 150 MX Series, Sealed (BK)

### *Terminal Part Information*

| Terminal Type ID | Terminated Lead | Diagnostic Test Probe | Terminal Removal Tool | Service Terminal | Tray | Core Crimp | Insulation Crimp |
|---|---|---|---|---|---|---|---|
| I | Not Available | Not Available | Not Available | Not Available | Not Available | Not Available | Not Available |

### *B68B Knock Sensor 2*

| Pin | Size | Color | Circuit | Function | Terminal Type ID | Option |
|---|---|---|---|---|---|---|
| 1 | 0.75 | WH/GY | 1876 | Knock Sensor Signal (2) | I | - |
| 2 | 0.75 | BK/GY | 2303 | Knock Sensor Low Reference (2) | I | - |

## B68B Knock Sensor 2

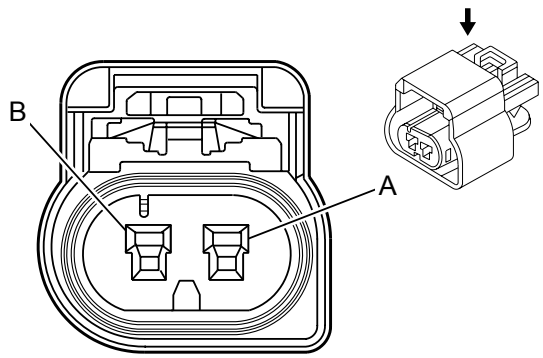


### Connector Part Information

Harness Type: Engine

OEM Connector: 15374222

Service Connector: SEE NOTE

Description: 2-Way F 150 GT Series, Sealed (NA)

### *Terminal Part Information*

| Terminal Type ID | Terminated Lead | Diagnostic Test Probe | Terminal Removal Tool | Service Terminal | Tray | Core Crimp | Insulation Crimp |
|---|---|---|---|---|---|---|---|
| I | 13575396 | J-35616-2A (GY) | J-38125-553 | 15326427 | 5 | 2 | 1 |

### *B68B Knock Sensor 2*

| Pin | Size | Color | Circuit | Function | Terminal Type ID | Option |
|---|---|---|---|---|---|---|
| A | 0.75 | WH/GY | 1876 | Knock Sensor Signal (2) | I | - |
| B | 0.75 | BK/GY | 2303 | Knock Sensor Low Reference (2) | I | - |

## B74 Manifold Absolute Pressure Sensor (L96)

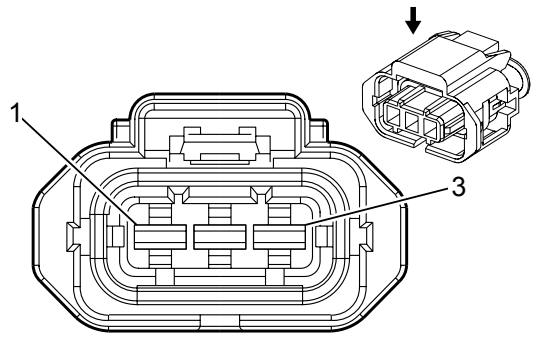


### Connector Part Information

Harness Type: Engine

OEM Connector: 13639747

Service Connector: POPA

Description: 3-Way F 2.8 Junior Power Timer Series, Sealed (BK)

### *Terminal Part Information*

| Terminal Type ID | Terminated Lead | Diagnostic Test Probe | Terminal Removal Tool | Service Terminal | Tray | Core Crimp | Insulation Crimp |
|---|---|---|---|---|---|---|---|
| I | 13578877 | J-35616-35 (VT) | J-38125-36 | 4-964286-1 | 16 | E | 1 |

### *B74 Manifold Absolute Pressure Sensor (L96)*

| Pin | Size | Color | Circuit | Function | Terminal Type ID | Option |
|---|---|---|---|---|---|---|
| 1 | 0.5 | GY/RD | 2704 | Manifold Absolute Pressure Sensor 5 Volt Reference | I | - |
| 2 | 0.5 | BK/L-GN | 469 | Manifold Absolute Pressure Sensor Low Reference | I | - |
| 3 | 0.5 | L-GN/WH | 432 | Manifold Absolute Pressure Sensor Signal | I | - |

## B74 Manifold Absolute Pressure Sensor (LML)

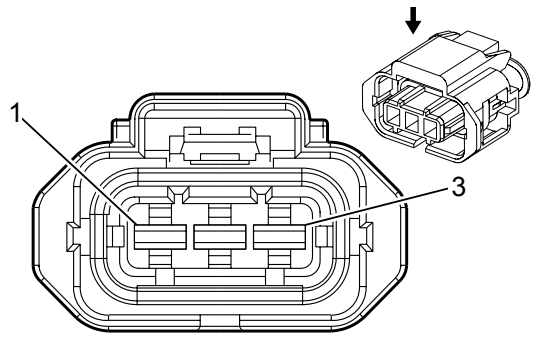


### Connector Part Information

Harness Type: Engine

OEM Connector: 15345983

Service Connector: 13580231

Description: 3-Way F 2.8 Junior Power Timer Series, Sealed (GY)

### *Terminal Part Information*

| Terminal Type ID | Terminated Lead | Diagnostic Test Probe | Terminal Removal Tool | Service Terminal | Tray | Core Crimp | Insulation Crimp |
|---|---|---|---|---|---|---|---|
| I | Pending | J-35616-35 (VT) | J-38125-36 | 4-964286-1 | 16 | Not Available | Not Available |

### *B74 Manifold Absolute Pressure Sensor (LML)*

| Pin | Size | Color | Circuit | Function | Terminal Type ID | Option |
|---|---|---|---|---|---|---|
| 1 | 0 | GY | 2704 | Manifold Absolute Pressure Sensor 5 Volt Reference | I | LML |
| 2 | 0 | OG/BK | 469 | Manifold Absolute Pressure Sensor Low Reference | I | LML |
| 3 | 0 | L-GN | 432 | Manifold Absolute Pressure Sensor Signal | I | LML |

## B75B Mass Air Flow/Intake Air Temperature Sensor

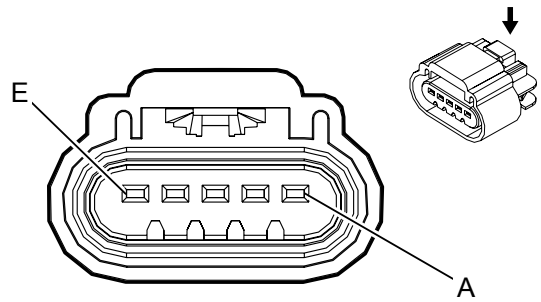


### Connector Part Information

Harness Type: Engine

OEM Connector: 13827319

Service Connector: Pending

Description: 5-Way F 150 GT Series, Sealed (GY)

### *Terminal Part Information*

| Terminal Type ID | Terminated Lead | Diagnostic Test Probe | Terminal Removal Tool | Service Terminal | Tray | Core Crimp | Insulation Crimp |
|---|---|---|---|---|---|---|---|
| I | 13575298 | J-35616-2A (GY) | J-38125-553 | 12191819 | 8 | E | 1 |

### *B75B Mass Air Flow/Intake Air Temperature Sensor*

| Pin | Size | Color | Circuit | Function | Terminal Type ID | Option |
|---|---|---|---|---|---|---|
| A | 0.5<br>0.5 | BK/PU<br>BK/D-BU | 2760<br>6288 | Intake Air Temperature Sensor Low Reference<br>Induction Air Temperature Sensor Low Reference | I | - |
| B | 0.5 | WH/D-BU | 6289 | Induction Air Temperature Sensor Signal | I | - |
| C | 0.5 | L-GN/WH | 492 | Mass Air Flow Sensor Signal | I | - |
| D | 0.5<br>0.5 | VT/D-BU<br>VT/D-BU | 5294<br>5293 | Powertrain Main Relay Fused Supply (5)<br>Powertrain Main Relay Fused Supply (4) | I | - |
| E | 0.5<br>0.5 | BK/WH<br>BK/GY | 451<br>2931 | Signal Ground<br>Mass Air Flow Sensor Low Reference | I | - |

## B75C Multifunction Intake Air Sensor

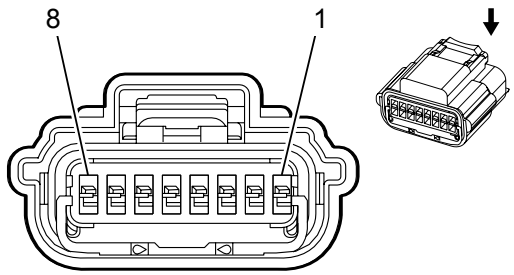


### Connector Part Information

Harness Type: Engine

OEM Connector: 13774439

Service Connector: 13583440

Description: 8-Way F 0.64 Series, Sealed (BK)

### *Terminal Part Information*

| Terminal Type ID | Terminated Lead | Diagnostic Test Probe | Terminal Removal Tool | Service Terminal | Tray | Core Crimp | Insulation Crimp |
|---|---|---|---|---|---|---|---|
| I | 13327120 | J-35616-64B (L-BU) | J-38125-215A | SAIT-A03T-M064 | 14 | P | P |
| II | Not Available | J-35616-64B (L-BU) | J-38125-215A | Not Available | Not Available | Not Available | Not Available |

### *B75C Multifunction Intake Air Sensor*

| Pin | Size | Color | Circuit | Function | Terminal Type ID | Option |
|---|---|---|---|---|---|---|
| 1 | 0.5 | WH/D-BU | 6289 | Induction Air Temperature Sensor Signal | I | - |
| 2 | 0.5 | WH/RD | 3201 | Throttle Inlet Absolute Pressure Sensor 5V Reference | I | - |
| 3 | 0.5 | WH/YE | 3202 | Throttle Inlet Absolute Pressure Sensor 5V Return | I | - |
| 4 | 0.5 | YE/WH | 3200 | Throttle Inlet Absolute Pressure Sensor Signal | I | - |
| 5 | 0.5 | VT/D-BU | 5294 | Powertrain Main Relay Fused Supply (5) | I | - |
| 6 | 0.5 | L-GN/WH | 492 | Mass Air Flow Sensor Signal | I | - |
| 7 | 0.75 | BK/WH | 451 | Signal Ground | II | - |
| 8 | 0.5 | GY/D-BU | 7564 | Humidity Sensor Signal | I | - |

## B75C Multifunction Intake Air Sensor

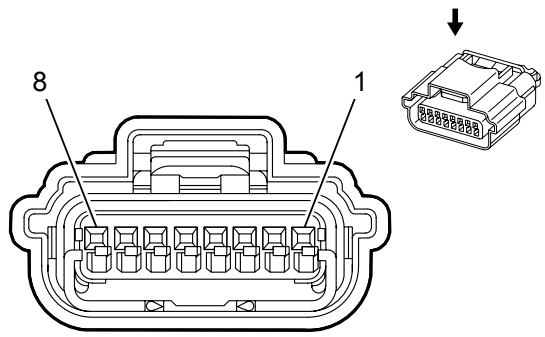


### Connector Part Information

Harness Type: Engine

OEM Connector: 13913550

Service Connector: No SDC/FSU

Description: 8-Way F 0.64 Series, Sealed (BK)

### *Terminal Part Information*

| Terminal Type ID | Terminated Lead | Diagnostic Test Probe | Terminal Removal Tool | Service Terminal | Tray | Core Crimp | Insulation Crimp |
|---|---|---|---|---|---|---|---|
| I | 13327120 | J-35616-64B (L-BU) | J-38125-215A | SAIT-A03T-M064 | 14 | P | P |
| II | Pending | J-35616-64B (L-BU) | J-38125-215A | Not Available | Not Available | Not Available | Not Available |

### *B75C Multifunction Intake Air Sensor*

| Pin | Size | Color | Circuit | Function | Terminal Type ID | Option |
|---|---|---|---|---|---|---|
| 1-4 | - | - | - | Not Occupied | - | - |
| 5 | 0.5 | VT/D-BU | 5290 | Powertrain Main Relay Fused Supply (1) | I | - |
| 6 | - | - | - | Not Occupied | - | - |
| 7 | 0.75 | BK/WH | 451 | Signal Ground | II | - |
| 8 | 0.75 | GY/D-BU | 7564 | Humidity Sensor Signal | II | - |

## B77LF Radio Volume Compensator Interior Noise Microphone - Left Front

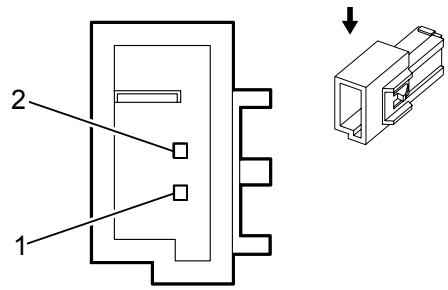


### Connector Part Information

Harness Type: Headliner

OEM Connector: 13676029

Service Connector: 19260825

Description: 2-Way M 0.64 Series (BK)

### *Terminal Part Information*

| Terminal Type ID | Terminated Lead | Diagnostic Test Probe | Terminal Removal Tool | Service Terminal | Tray | Core Crimp | Insulation Crimp |
|---|---|---|---|---|---|---|---|
| I | Not Available | J-35616-65B (L-BU) | J-38125-215A | SAITW-A03T-064 | 20 | Not Available | Not Available |

### *B77LF Radio Volume Compensator Interior Noise Microphone - Left Front*

| Pin | Size | Color | Circuit | Function | Terminal Type ID | Option |
|---|---|---|---|---|---|---|
| 1 | 0.35 | L-GN/BK | 3008 | Noise Reduction Microphone #1 Return | I | - |
| 2 | 0.35<br>0.35 | L-GN/BN<br>L-GN/WH | 3005<br>3005 | Noise Reduction Microphone #1 Signal<br>Noise Reduction Microphone #1 Signal | I | - |

## B77R Radio Volume Compensator Interior Noise Microphone - Rear

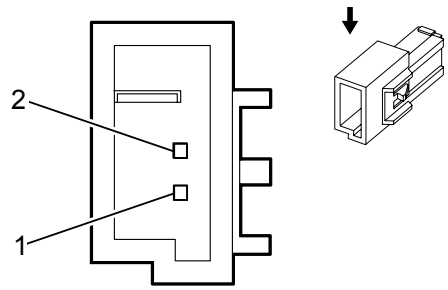


### Connector Part Information

Harness Type: Headliner

OEM Connector: 13676029

Service Connector: 19260825

Description: 2-Way M 0.64 Series (BK)

### *Terminal Part Information*

| Terminal Type ID | Terminated Lead | Diagnostic Test Probe | Terminal Removal Tool | Service Terminal | Tray | Core Crimp | Insulation Crimp |
|---|---|---|---|---|---|---|---|
| I | Not Available | J-35616-65B (L-BU) | J-38125-215A | SAITW-A03T-064 | 20 | Not Available | Not Available |

### *B77R Radio Volume Compensator Interior Noise Microphone - Rear*

| Pin | Size | Color | Circuit | Function | Terminal Type ID | Option |
|---|---|---|---|---|---|---|
| 1 | 0.35 | D-BU/BK | 3009 | Noise Reduction Microphone #2 Return | I | - |
| 2 | 0.35 | D-BU/YE | 3006 | Noise Reduction Microphone #2 Signal | I | - |

## B77RF Radio Volume Compensator Interior Noise Microphone - Right Front

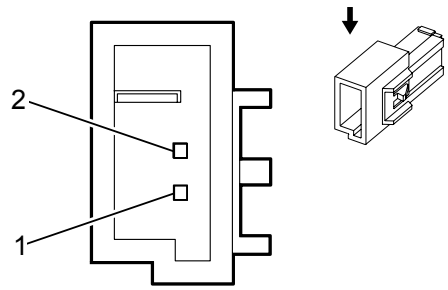


### Connector Part Information

Harness Type: Headliner

OEM Connector: 13676029

Service Connector: 19260825

Description: 2-Way M 0.64 Series (BK)

### *Terminal Part Information*

| Terminal Type ID | Terminated Lead | Diagnostic Test Probe | Terminal Removal Tool | Service Terminal | Tray | Core Crimp | Insulation Crimp |
|---|---|---|---|---|---|---|---|
| I | Not Available | J-35616-65B (L-BU) | J-38125-215A | SAITW-A03T-064 | 20 | Not Available | Not Available |

### *B77RF Radio Volume Compensator Interior Noise Microphone - Right Front*

| Pin | Size | Color | Circuit | Function | Terminal Type ID | Option |
|---|---|---|---|---|---|---|
| 1 | 0.35 | GY/BN | 3010 | Noise Reduction Microphone #3 Return | I | - |
| 2 | 0.35 | GY/D-BU | 3007 | Noise Reduction Microphone #3 Signal | I | - |

## B78A Front Object Sensor - Left Outer

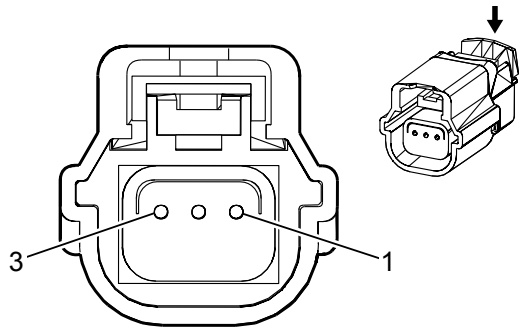


### Connector Part Information

Harness Type: Front Bumper

OEM Connector: 13512481

Service Connector: No SDC/FSU

Description: 3-Way F 0.64 Series, Sealed (BK)

### *Terminal Part Information*

| Terminal Type ID | Terminated Lead | Diagnostic Test Probe | Terminal Removal Tool | Service Terminal | Tray | Core Crimp | Insulation Crimp |
|---|---|---|---|---|---|---|---|
| I | 13327120 | J-35616-64B (L-BU) | J-38125-215A | SAIT-A03T-M064 | 14 | P | P |
| II | Pending | J-35616-64B (L-BU) | J-38125-215A | Not Available | Not Available | Not Available | Not Available |

### *B78A Front Object Sensor - Left Outer*

| Pin | Size | Color | Circuit | Function | Terminal Type ID | Option |
|---|---|---|---|---|---|---|
| 1 | 0.5<br>0.5 | BN<br>YE/L-GN | 6581<br>5213 | Front Parking Aid Display Supply Voltage<br>Front Parking Left/Right/Mid Sensor | I | - |
| 2 | 0.5 | VT/WH | 5215 | Front Parking Left Corner Sensor | I | - |
| 3 | 0.5 | BK/D-BU | 5214 | Front Parking Sensor Low Reference | I | - |

## B78B Front Object Sensor - Right Outer

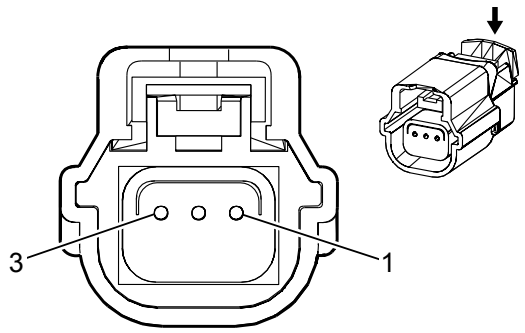


### Connector Part Information

Harness Type: Front Bumper

OEM Connector: 13512481

Service Connector: No SDC/FSU

Description: 3-Way F 0.64 Series, Sealed (BK)

### *Terminal Part Information*

| Terminal Type ID | Terminated Lead | Diagnostic Test Probe | Terminal Removal Tool | Service Terminal | Tray | Core Crimp | Insulation Crimp |
|---|---|---|---|---|---|---|---|
| I | 13327120 | J-35616-64B (L-BU) | J-38125-215A | SAIT-A03T-M064 | 14 | P | P |
| II | Pending | J-35616-64B (L-BU) | J-38125-215A | Not Available | Not Available | Not Available | Not Available |

### *B78B Front Object Sensor - Right Outer*

| Pin | Size | Color | Circuit | Function | Terminal Type ID | Option |
|---|---|---|---|---|---|---|
| 1 | 0.5 | YE/L-GN | 5213 | Front Parking Left/Right/Mid Sensor | I | - |
| 2 | 0.5 | WH/GY | 5217 | Front Parking Right Corner Sensor | I | - |
| 3 | 0.5 | BK/D-BU | 5214 | Front Parking Sensor Low Reference | I | - |

## B78C Front Object Sensor - Left Middle

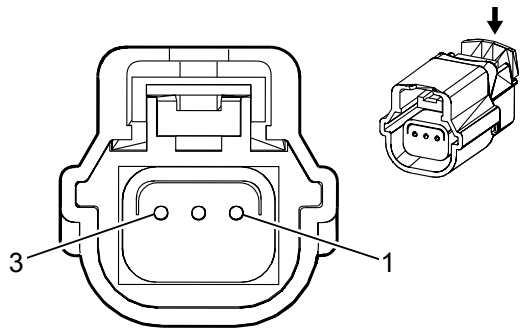


### Connector Part Information

Harness Type: Front Bumper

OEM Connector: 13512481

Service Connector: No SDC/FSU

Description: 3-Way F 0.64 Series, Sealed (BK)

### *Terminal Part Information*

| Terminal Type ID | Terminated Lead | Diagnostic Test Probe | Terminal Removal Tool | Service Terminal | Tray | Core Crimp | Insulation Crimp |
|---|---|---|---|---|---|---|---|
| I | 13327120 | J-35616-64B (L-BU) | J-38125-215A | SAIT-A03T-M064 | 14 | P | P |
| II | Pending | J-35616-64B (L-BU) | J-38125-215A | Not Available | Not Available | Not Available | Not Available |

### *B78C Front Object Sensor - Left Middle*

| Pin | Size | Color | Circuit | Function | Terminal Type ID | Option |
|---|---|---|---|---|---|---|
| 1 | 0.5 | YE/L-GN | 5213 | Front Parking Left/Right/Mid Sensor | I | - |
| 2 | 0.5 | YE/GY | 5216 | Front Parking Left Mid Sensor | I | - |
| 3 | 0.5 | BK/D-BU | 5214 | Front Parking Sensor Low Reference | I | - |

## B78D Front Object Sensor - Right Middle

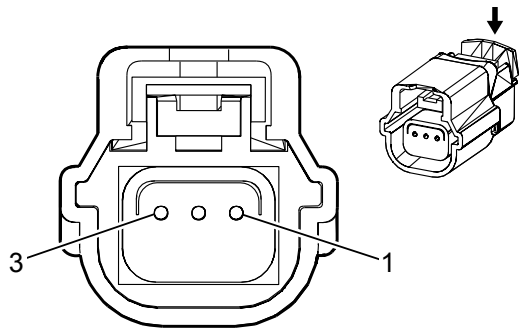


### Connector Part Information

Harness Type: Front Bumper

OEM Connector: 13512481

Service Connector: No SDC/FSU

Description: 3-Way F 0.64 Series, Sealed (BK)

### *Terminal Part Information*

| Terminal Type ID | Terminated Lead | Diagnostic Test Probe | Terminal Removal Tool | Service Terminal | Tray | Core Crimp | Insulation Crimp |
|---|---|---|---|---|---|---|---|
| I | 13327120 | J-35616-64B (L-BU) | J-38125-215A | SAIT-A03T-M064 | 14 | P | P |
| II | Pending | J-35616-64B (L-BU) | J-38125-215A | Not Available | Not Available | Not Available | Not Available |

### *B78D Front Object Sensor - Right Middle*

| Pin | Size | Color | Circuit | Function | Terminal Type ID | Option |
|---|---|---|---|---|---|---|
| 1 | 0.5 | YE/L-GN | 5213 | Front Parking Left/Right/Mid Sensor | I | - |
| 2 | 0.5 | VT/GY | 5218 | Front Parking Right Mid Sensor | I | - |
| 3 | 0.5 | BK/D-BU | 5214 | Front Parking Sensor Low Reference | I | - |

## B78E Rear Object Sensor - Left Middle

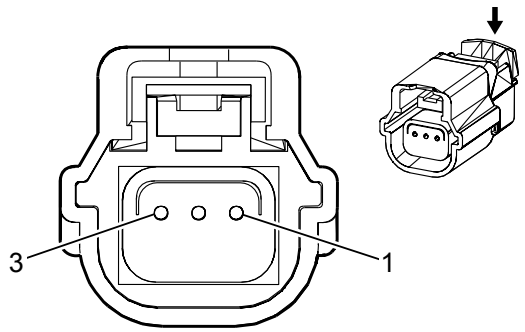


### Connector Part Information

Harness Type: Rear Bumper

OEM Connector: 13512481

Service Connector: No SDC/FSU

Description: 3-Way F 0.64 Series, Sealed (BK)

### *Terminal Part Information*

| Terminal Type ID | Terminated Lead | Diagnostic Test Probe | Terminal Removal Tool | Service Terminal | Tray | Core Crimp | Insulation Crimp |
|---|---|---|---|---|---|---|---|
| I | 13327120 | J-35616-64B (L-BU) | J-38125-215A | SAIT-A03T-M064 | 14 | P | P |

### *B78E Rear Object Sensor - Left Middle*

| Pin | Size | Color | Circuit | Function | Terminal Type ID | Option |
|---|---|---|---|---|---|---|
| 1 | 0.5 | BN/WH | 2374 | Object Sensor Supply Voltage | I | - |
| 2 | 0.5 | YE/D-BU | 2376 | Left Rear Middle Object Sensor Signal | I | - |
| 3 | 0.5 | BK/GY | 2379 | Object Sensor Low Reference | I | - |

## B78F Rear Object Sensor - Right Middle

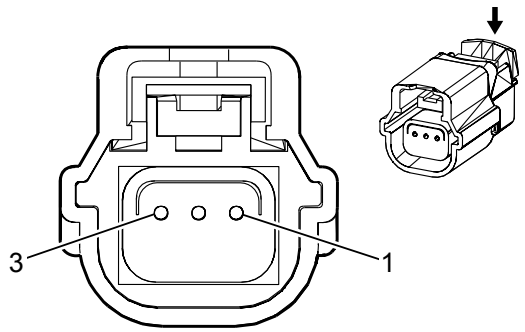


### Connector Part Information

Harness Type: Rear Bumper

OEM Connector: 13512481

Service Connector: No SDC/FSU

Description: 3-Way F 0.64 Series, Sealed (BK)

### *Terminal Part Information*

| Terminal Type ID | Terminated Lead | Diagnostic Test Probe | Terminal Removal Tool | Service Terminal | Tray | Core Crimp | Insulation Crimp |
|---|---|---|---|---|---|---|---|
| I | 13327120 | J-35616-64B (L-BU) | J-38125-215A | SAIT-A03T-M064 | 14 | P | P |

### *B78F Rear Object Sensor - Right Middle*

| Pin | Size | Color | Circuit | Function | Terminal Type ID | Option |
|---|---|---|---|---|---|---|
| 1 | 0.5 | BN/WH | 2374 | Object Sensor Supply Voltage | I | - |
| 2 | 0.5 | YE/VT | 2378 | Right Rear Corner Object Sensor Signal | I | - |
| 3 | 0.5 | BK/GY | 2379 | Object Sensor Low Reference | I | - |

## B78G Rear Object Sensor - Left Outer

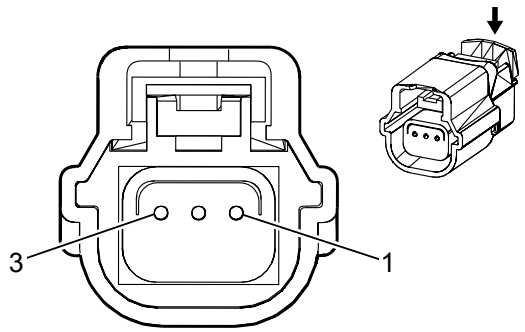


### Connector Part Information

Harness Type: Rear Bumper

OEM Connector: 13512481

Service Connector: No SDC/FSU

Description: 3-Way F 0.64 Series, Sealed (BK)

### *Terminal Part Information*

| Terminal Type ID | Terminated Lead | Diagnostic Test Probe | Terminal Removal Tool | Service Terminal | Tray | Core Crimp | Insulation Crimp |
|---|---|---|---|---|---|---|---|
| I | 13327120 | J-35616-64B (L-BU) | J-38125-215A | SAIT-A03T-M064 | 14 | P | P |

### *B78G Rear Object Sensor - Left Outer*

| Pin | Size | Color | Circuit | Function | Terminal Type ID | Option |
|---|---|---|---|---|---|---|
| 1 | 0.5 | BN/WH | 2374 | Object Sensor Supply Voltage | I | - |
| 2 | 0.5 | YE | 2375 | Left Rear Corner Object Sensor Signal | I | - |
| 3 | 0.5 | BK/GY | 2379 | Object Sensor Low Reference | I | - |

## B78H Rear Object Sensor - Right Outer

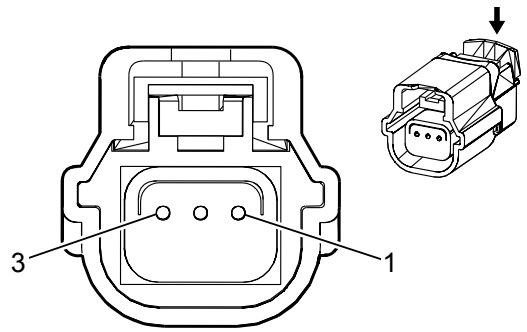


### Connector Part Information

Harness Type: Rear Bumper

OEM Connector: 13512481

Service Connector: No SDC/FSU

Description: 3-Way F 0.64 Series, Sealed (BK)

### *Terminal Part Information*

| Terminal Type ID | Terminated Lead | Diagnostic Test Probe | Terminal Removal Tool | Service Terminal | Tray | Core Crimp | Insulation Crimp |
|---|---|---|---|---|---|---|---|
| I | 13327120 | J-35616-64B (L-BU) | J-38125-215A | SAIT-A03T-M064 | 14 | P | P |

### *B78H Rear Object Sensor - Right Outer*

| Pin | Size | Color | Circuit | Function | Terminal Type ID | Option |
|---|---|---|---|---|---|---|
| 1 | 0.5 | BN/WH | 2374 | Object Sensor Supply Voltage | I | - |
| 2 | 0.5 | YE/WH | 2377 | Right Rear Middle Object Sensor Signal | I | - |
| 3 | 0.5 | BK/GY | 2379 | Object Sensor Low Reference | I | - |

## B80 Park Brake Switch

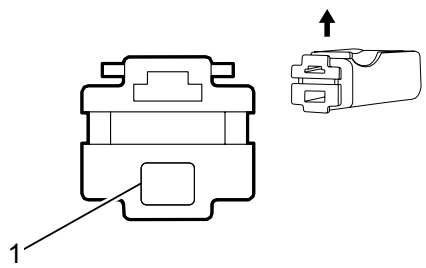


### Connector Part Information

Harness Type: Body

OEM Connector: 13511619

Service Connector: Pending

Description: 1-Way F 250 Series (BK)

### *Terminal Part Information*

| Terminal Type ID | Terminated Lead | Diagnostic Test Probe | Terminal Removal Tool | Service Terminal | Tray | Core Crimp | Insulation Crimp |
|---|---|---|---|---|---|---|---|
| I | Pending | Pending | Pending | Not Available | Not Available | Not Available | Not Available |

### *B80 Park Brake Switch*

| Pin | Size | Color | Circuit | Function | Terminal Type ID | Option |
|---|---|---|---|---|---|---|
| 1 | 0.75 | D-BU/VT | 1134 | Park Brake Switch Signal | I | - |
| | 1 | D-BU/VT | 1134 | Park Brake Switch Signal | | |

## B88D Seat Belt Switch - Driver

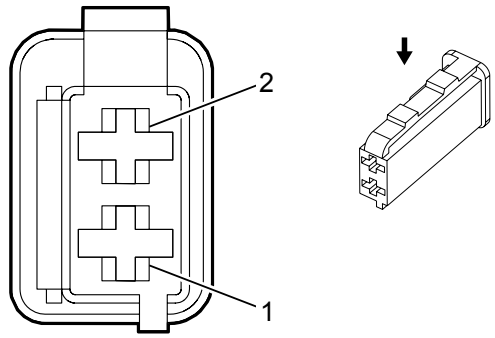


### Connector Part Information

Harness Type: Driver Seat Cushion

OEM Connector: 1563189-1

Service Connector: 13580951

Description: 2-Way F 1.6 Timer Series (BK)

### *Terminal Part Information*

| Terminal Type ID | Terminated Lead | Diagnostic Test Probe | Terminal Removal Tool | Service Terminal | Tray | Core Crimp | Insulation Crimp |
|---|---|---|---|---|---|---|---|
| I | Not Available | Not Available | Not Available | Not Available | Not Available | Not Available | Not Available |

### *B88D Seat Belt Switch - Driver*

| Pin | Size | Color | Circuit | Function | Terminal Type ID | Option |
|---|---|---|---|---|---|---|
| 1 | 0.35 | BK/OG | 1363 | Driver Seat Belt Switch Low Reference | I | - |
| 2 | 0.35 | OG/BN | 238 | Driver Seat Belt Switch Signal | I | - |

## B88P Seat Belt Switch - Passenger

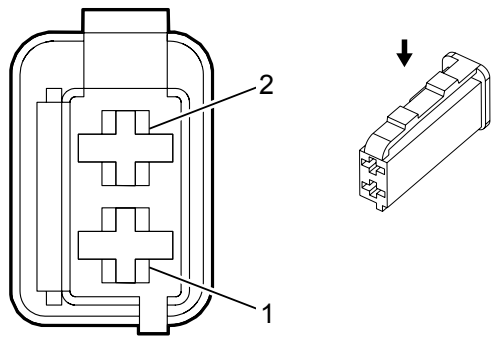


### Connector Part Information

Harness Type: Passenger Seat Cushion

OEM Connector: 1563189-1

Service Connector: 13580951

Description: 2-Way F 1.6 Timer Series (BK)

### *Terminal Part Information*

| Terminal Type ID | Terminated Lead | Diagnostic Test Probe | Terminal Removal Tool | Service Terminal | Tray | Core Crimp | Insulation Crimp |
|---|---|---|---|---|---|---|---|
| I | Not Available | Not Available | Not Available | Not Available | Not Available | Not Available | Not Available |

### *B88P Seat Belt Switch - Passenger*

| Pin | Size | Color | Circuit | Function | Terminal Type ID | Option |
|---|---|---|---|---|---|---|
| 1 | 0.35 | BK/OG | 1361 | Passenger Seat Belt Switch Low Reference | I | - |
| 2 | 0.35 | OG/VT | 1362 | Passenger Seat Belt Switch Signal | I | - |

## B99 Steering Wheel Angle Sensor

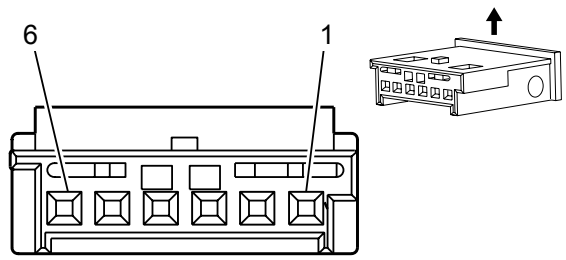


### Connector Part Information

Harness Type:

OEM Connector: 1-1241370-3

Service Connector: 13505903

Description: 6 F 0.64 Micro Quadlock Series (BK)

### *Terminal Part Information*

| Terminal Type ID | Terminated Lead | Diagnostic Test Probe | Terminal Removal Tool | Service Terminal | Tray | Core Crimp | Insulation Crimp |
|---|---|---|---|---|---|---|---|
| I | Not Available | Not Available | Not Available | Not Available | Not Available | Not Available | Not Available |

### *B99 Steering Wheel Angle Sensor*

| Pin | Size | Color | Circuit | Function | Terminal Type ID | Option |
|---|---|---|---|---|---|---|
| 1 | 0.5 | WH | 6106 | High Speed GMLAN Serial Data (-) (2) | I | - |
| 2 | 0.5 | WH | 6106 | High Speed GMLAN Serial Data (-) (2) | I | - |
| 3 | 0.5 | BU/YE | 6105 | High Speed GMLAN Serial Data (+) (2) | I | - |
| 4 | 0.5 | BU/YE | 6105 | High Speed GMLAN Serial Data (+) (2) | I | - |
| 5 | 0.5 | GN/BN | 2087 | Combined Vehicle Inertial Sensor Supply Voltage | I | - |
| 6 | 0.5 | BK/WH | 1851 | Signal Ground | I | - |

## B107 Accelerator Pedal Position Sensor

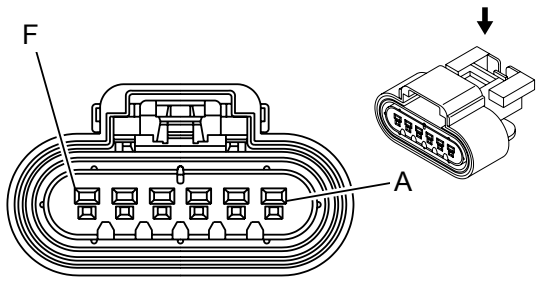


### Connector Part Information

Harness Type: Brake Clutch Jumper

OEM Connector: 15326830

Service Connector: 13584094

Description: 6-Way F 150 GT Series, Sealed (BK)

### *Terminal Part Information*

| Terminal Type ID | Terminated Lead | Diagnostic Test Probe | Terminal Removal Tool | Service Terminal | Tray | Core Crimp | Insulation Crimp |
|---|---|---|---|---|---|---|---|
| I | Pending | J-35616-2A (GY) | J-38125-553 | 15326427 | 5 | E | A |

### *B107 Accelerator Pedal Position Sensor*

| Pin | Size | Color | Circuit | Function | Terminal Type ID | Option |
|---|---|---|---|---|---|---|
| A | 0.35 | BK/VT | 1272 | Accelerator Pedal Position Low Reference (2) | I | - |
| B | 0.35 | L-GN/WH | 1162 | Accelerator Pedal Position Signal (2) | I | - |
| C | 0.35 | BN/RD | 1274 | Accelerator Pedal Position 5 Volt Reference (2) | I | - |
| D | 0.35 | WH/RD | 1164 | Accelerator Pedal Position 5 Volt Reference (1) | I | - |
| E | 0.35 | YE/WH | 1161 | Accelerator Pedal Position Signal (1) | I | - |
| F | 0.35 | BK/D-BU | 1271 | Accelerator Pedal Position Low Reference (1) | I | - |

## B112 Turbocharger Vane Position Sensor (LML)

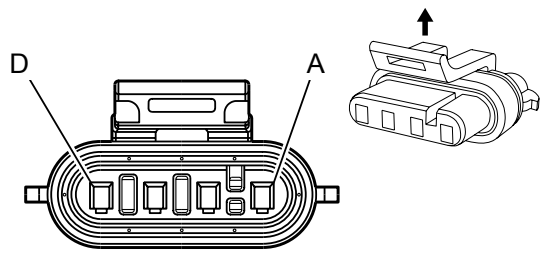


### Connector Part Information

Harness Type: Engine

OEM Connector: 12191366

Service Connector: 88988603

Description: 4-Way F 150 Metri Pack Series, Sealed (L-GY)

### *Terminal Part Information*

| Terminal Type ID | Terminated Lead | Diagnostic Test Probe | Terminal Removal Tool | Service Terminal | Tray | Core Crimp | Insulation Crimp |
|---|---|---|---|---|---|---|---|
| I | Pending | J-35616-14 (GN) | J-38125-12A | 12160223 | 3 | Not Available | Not Available |

### *B112 Turbocharger Vane Position Sensor (LML)*

| Pin | Size | Color | Circuit | Function | Terminal Type ID | Option |
|---|---|---|---|---|---|---|
| A | - | - | - | Not Occupied | - | - |
| B | 0 | YE | 5947 | Variable Nozzle Turbo Position Sensor Signal | I | LML |
| C | 0 | OG/BK | 5929 | Variable Nozzle Turbo Position Sensor Low Reference | I | LML |
| D | 0 | | 5928 | Variable Nozzle Turbo Position Sensor Voltage Reference | I | LML |

## B116 Water in Fuel Sensor (LML)

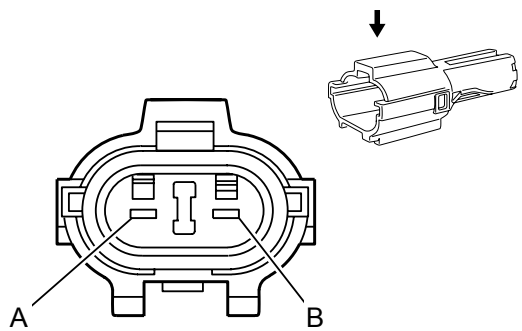


### Connector Part Information

Harness Type: Engine

OEM Connector: 7322-1424-40

Service Connector: 94447499

Description: 2-Way F  (L-GY)

### *Terminal Part Information*

| Terminal Type ID | Terminated Lead | Diagnostic Test Probe | Terminal Removal Tool | Service Terminal | Tray | Core Crimp | Insulation Crimp |
|---|---|---|---|---|---|---|---|
| I | Pending | Pending | Pending | Not Available | Not Available | Not Available | Not Available |

### *B116 Water in Fuel Sensor (LML)*

| Pin | Size | Color | Circuit | Function | Terminal Type ID | Option |
|---|---|---|---|---|---|---|
| 1 | 0 | BU | 6863 | Water In Fuel Sensor Low Reference | I | LML |
| 2 | 0 | BU/YE | 6861 | Water In Fuel Sensor Signal | I | LML |

## B118B Windshield Washer Fluid Level Switch

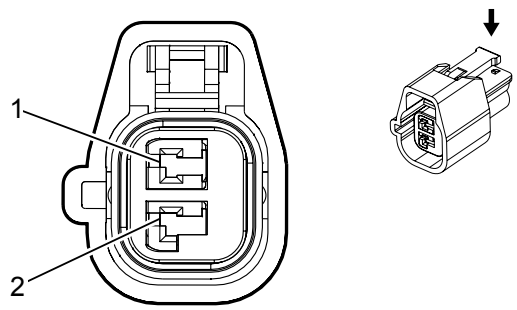


### Connector Part Information

Harness Type: Forward Lamp

OEM Connector: 13577970

Service Connector: Pending

Description: 2-Way F 1.5 Series (L-GY)

### *Terminal Part Information*

| Terminal Type ID | Terminated Lead | Diagnostic Test Probe | Terminal Removal Tool | Service Terminal | Tray | Core Crimp | Insulation Crimp |
|---|---|---|---|---|---|---|---|
| I | 13576370 | J-35616-2A (GY) | J-38125-11A | 7116-4102-08 | 9 | E | 1 |

### *B118B Windshield Washer Fluid Level Switch*

| Pin | Size | Color | Circuit | Function | Terminal Type ID | Option |
|---|---|---|---|---|---|---|
| 1 | 0.5 | VT | 185 | Low Washer Fluid Indicator Control | I | - |
| 2 | 0.5 | BK | 150 | Ground | I | - |

## B130A Exhaust Gas Recirculation Temperature Sensor 1 (LML)

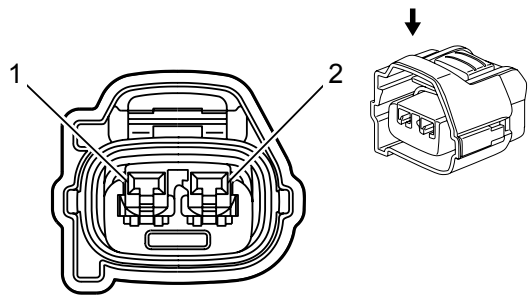


### Connector Part Information

Harness Type: Engine

OEM Connector: 7283-7020-10

Service Connector: 13576415

Description: 2-Way F 090 Series, Sealed (D-GY)

### *Terminal Part Information*

| Terminal Type ID | Terminated Lead | Diagnostic Test Probe | Terminal Removal Tool | Service Terminal | Tray | Core Crimp | Insulation Crimp |
|---|---|---|---|---|---|---|---|
| I | Pending | Pending | Pending | Not Available | Not Available | Not Available | Not Available |

### *B130A Exhaust Gas Recirculation Temperature Sensor 1 (LML)*

| Pin | Size | Color | Circuit | Function | Terminal Type ID | Option |
|---|---|---|---|---|---|---|
| 1 | 0 | VT/WH | 7584 | Exhaust Gas Recirculation Temperature Sensor #1 Supply Voltage | I | LML |
| 2 | 0 | BR | 6274 | Exhaust Gas Recirculation Temperature Sensor Low Reference | I | LML |

## B130B Exhaust Gas Recirculation Temperature Sensor 2 (LML)

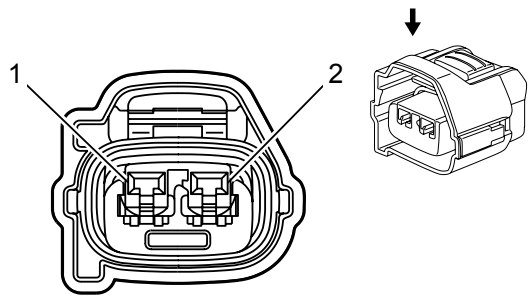


### Connector Part Information

Harness Type: Engine

OEM Connector: 7283-7020-10

Service Connector: 13576415

Description: 2-Way F 090 Series, Sealed (D-GY)

### *Terminal Part Information*

| Terminal Type ID | Terminated Lead | Diagnostic Test Probe | Terminal Removal Tool | Service Terminal | Tray | Core Crimp | Insulation Crimp |
|---|---|---|---|---|---|---|---|
| I | Pending | Pending | Pending | Not Available | Not Available | Not Available | Not Available |

### *B130B Exhaust Gas Recirculation Temperature Sensor 2 (LML)*

| Pin | Size | Color | Circuit | Function | Terminal Type ID | Option |
|---|---|---|---|---|---|---|
| 1 | 0 | BU | 7583 | Exhaust Gas Recirculation Temperature Sensor #2 Supply Voltage | I | LML |
| 2 | 0 | WH | 6275 | Exhaust Gas Recirculation Temperature Sensor #2 Low Reference | I | LML |

## B131A Exhaust Temperature Sensor 1 (LML)

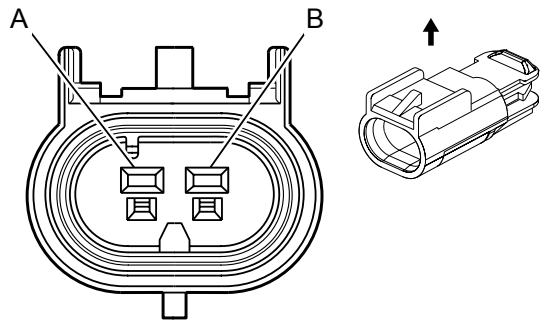


### Connector Part Information

Harness Type: Engine

OEM Connector: 13546698

Service Connector: 13580103

Description: 2-Way M 150 GT Series, Sealed (NA)

### *Terminal Part Information*

| Terminal Type ID | Terminated Lead | Diagnostic Test Probe | Terminal Removal Tool | Service Terminal | Tray | Core Crimp | Insulation Crimp |
|---|---|---|---|---|---|---|---|
| I | Pending | J-35616-3 (GY) | J-38125-553 | 15373403 | 5 | Not Available | Not Available |

### *B131A Exhaust Temperature Sensor 1 (LML)*

| Pin | Size | Color | Circuit | Function | Terminal Type ID | Option |
|---|---|---|---|---|---|---|
| A | 0 | BU | 5277 | Exhaust Gas Temperature Sensor (1) | I | LML |
| B | 0 | BR | 6782 | Exhaust Gas Temperature Sensor 1 Low Reference | I | LML |

## B131C Exhaust Temperature Sensor 3 (LML)

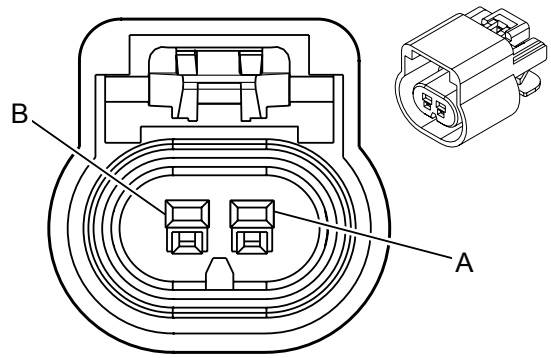


### Connector Part Information

Harness Type: Chassis

OEM Connector: 13546696

Service Connector: Service by Harness - See Part Catalog

Description: 2-Way F 150 GT Series, Sealed (NA)

### *Terminal Part Information*

| Terminal Type ID | Terminated Lead | Diagnostic Test Probe | Terminal Removal Tool | Service Terminal | Tray | Core Crimp | Insulation Crimp |
|---|---|---|---|---|---|---|---|
| I | Pending | J-35616-2A (GY) | J-38125-553 | 15326427 | 5 | E | A |

### *B131C Exhaust Temperature Sensor 3 (LML)*

| Pin | Size | Color | Circuit | Function | Terminal Type ID | Option |
|---|---|---|---|---|---|---|
| A | 0.5 | GY/L-GN | 5378 | Exhaust Gas Temperature Sensor (3) | I | - |
| B | 0.5 | BK/L-GN | 3657 | Exhaust Gas Temperature Sensor #3 Low Reference | I | - |

## B131E Exhaust Temperature Sensor 5 (LML)

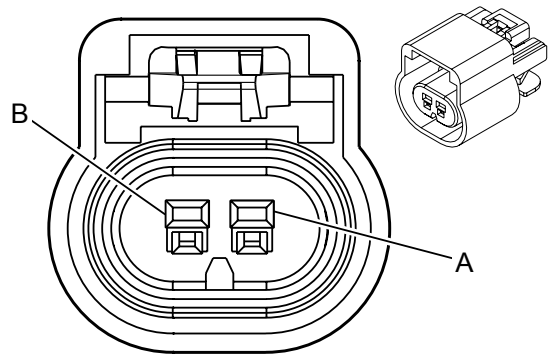


### Connector Part Information

Harness Type: Chassis

OEM Connector: 13546696

Service Connector: Service by Harness - See Part Catalog

Description: 2-Way F 150 GT Series, Sealed (NA)

### *Terminal Part Information*

| Terminal Type ID | Terminated Lead | Diagnostic Test Probe | Terminal Removal Tool | Service Terminal | Tray | Core Crimp | Insulation Crimp |
|---|---|---|---|---|---|---|---|
| I | Pending | J-35616-2A (GY) | J-38125-553 | 15326427 | 5 | E | A |

### *B131E Exhaust Temperature Sensor 5 (LML)*

| Pin | Size | Color | Circuit | Function | Terminal Type ID | Option |
|---|---|---|---|---|---|---|
| A | 0.5 | D-BU/GY | 3660 | Exhaust Gas Temperature Sensor #5 Signal | I | - |
| B | 0.5 | BK/VT | 3661 | Exhaust Gas Temperature Sensor #5 Low Reference | I | - |

## B150 Fuel Tank Pressure Sensor

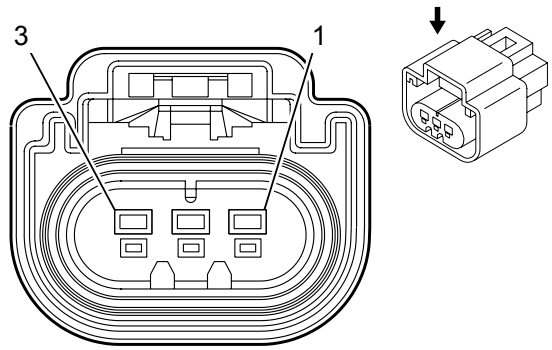


### Connector Part Information

Harness Type: Chassis

OEM Connector: 13511996

Service Connector: 13580873

Description: 3-Way F 150 GT Series, Sealed (GY)

### *Terminal Part Information*

| Terminal Type ID | Terminated Lead | Diagnostic Test Probe | Terminal Removal Tool | Service Terminal | Tray | Core Crimp | Insulation Crimp |
|---|---|---|---|---|---|---|---|
| I | 13575298 | J-35616-2A (GY) | J-38125-553 | 12191819 | 8 | E | 1 |

### *B150 Fuel Tank Pressure Sensor*

| Pin | Size | Color | Circuit | Function | Terminal Type ID | Option |
|---|---|---|---|---|---|---|
| 1 | 0.5 | D-BU/WH | 890 | Fuel Tank Pressure Sensor Signal | I | - |
| 2 | 0.5 | BK/L-GN | 6281 | Fuel Level Sensor Low Reference | I | - |
| 3 | 0.5 | YE/RD | 2709 | Fuel Tank Pressure Sensor 5 Volt Reference | I | - |

## B152LF Suspension Position Sensor - Left Front

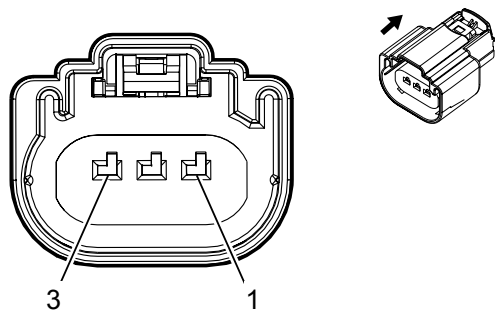


### Connector Part Information

Harness Type: Chassis

OEM Connector: 13873527

Service Connector: 19300594

Description: 3-Way F 1.5 Series, Sealed (GY)

### *Terminal Part Information*

| Terminal Type ID | Terminated Lead | Diagnostic Test Probe | Terminal Removal Tool | Service Terminal | Tray | Core Crimp | Insulation Crimp |
|---|---|---|---|---|---|---|---|
| I | Not Available | Not Available | Not Available | Not Available | Not Available | Not Available | Not Available |

### *B152LF Suspension Position Sensor - Left Front*

| Pin | Size | Color | Circuit | Function | Terminal Type ID | Option |
|---|---|---|---|---|---|---|
| 1 | 0.5 | D-BU/RD | 1205 | Left Front Strut Position Sensor Voltage Reference | I | - |
| 2 | 0.5 | BK/D-BU | 1206 | Left Front Strut Position Sensor Low Reference | I | - |
| 3 | 0.5 | BN/WH | 1207 | Left Front Strut Position Sensor Signal | I | - |

## B152LR Suspension Position Sensor - Left Rear

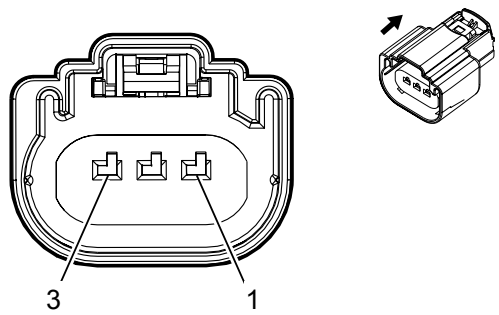


### Connector Part Information

Harness Type: Chassis

OEM Connector: 13873527

Service Connector: 19300594

Description: 3-Way F 1.5 Series, Sealed (GY)

### *Terminal Part Information*

| Terminal Type ID | Terminated Lead | Diagnostic Test Probe | Terminal Removal Tool | Service Terminal | Tray | Core Crimp | Insulation Crimp |
|---|---|---|---|---|---|---|---|
| I | Not Available | Not Available | Not Available | Not Available | Not Available | Not Available | Not Available |

### *B152LR Suspension Position Sensor - Left Rear*

| Pin | Size | Color | Circuit | Function | Terminal Type ID | Option |
|---|---|---|---|---|---|---|
| 1 | 0.5 | YE/RD | 1208 | Left Rear Strut Position Sensor Voltage Reference | I | - |
| 2 | 0.5 | BK/L-GN | 1209 | Left Rear Strut Position Sensor Low Reference | I | - |
| 3 | 0.5 | L-GN/WH | 1210 | Left Rear Strut Position Sensor Signal | I | - |

## B152RF Suspension Position Sensor - Right Front

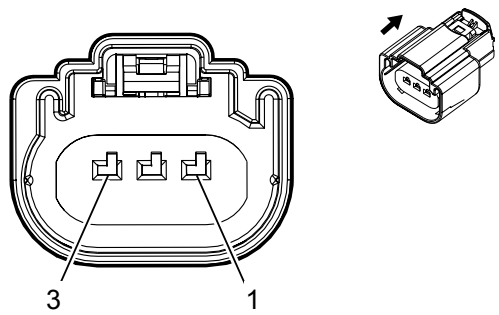


### Connector Part Information

Harness Type: Chassis

OEM Connector: 13873527

Service Connector: 19300594

Description: 3-Way F 1.5 Series, Sealed (GY)

### *Terminal Part Information*

| Terminal Type ID | Terminated Lead | Diagnostic Test Probe | Terminal Removal Tool | Service Terminal | Tray | Core Crimp | Insulation Crimp |
|---|---|---|---|---|---|---|---|
| I | Not Available | Not Available | Not Available | Not Available | Not Available | Not Available | Not Available |

### *B152RF Suspension Position Sensor - Right Front*

| Pin | Size | Color | Circuit | Function | Terminal Type ID | Option |
|---|---|---|---|---|---|---|
| 1 | 0.5 | BN/RD | 1211 | Right Front Strut Position Sensor Voltage Reference | I | - |
| 2 | 0.5 | BK/GY | 1212 | Right Front Strut Position Sensor Low Reference | I | - |
| 3 | 0.5 | YE/WH | 1213 | Right Front Strut Position Sensor Signal | I | - |

## B152RR Suspension Position Sensor - Right Rear

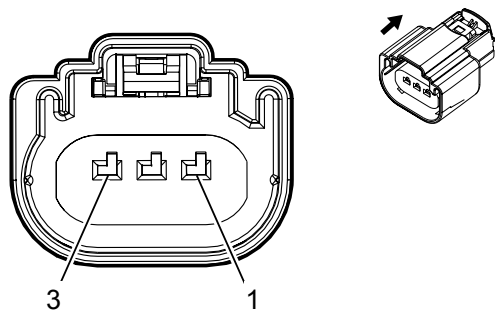


### Connector Part Information

Harness Type: Chassis

OEM Connector: 13873527

Service Connector: 19300594

Description: 3-Way F 1.5 Series, Sealed (GY)

### *Terminal Part Information*

| Terminal Type ID | Terminated Lead | Diagnostic Test Probe | Terminal Removal Tool | Service Terminal | Tray | Core Crimp | Insulation Crimp |
|---|---|---|---|---|---|---|---|
| I | Not Available | Not Available | Not Available | Not Available | Not Available | Not Available | Not Available |

### *B152RR Suspension Position Sensor - Right Rear*

| Pin | Size | Color | Circuit | Function | Terminal Type ID | Option |
|---|---|---|---|---|---|---|
| 1 | 0.5 | L-GN/RD | 1214 | Right Rear Strut Position Sensor Voltage Reference | I | - |
| 2 | 0.5 | BK/YE | 1215 | Right Rear Strut Position Sensor Low Reference | I | - |
| 3 | 0.5 | L-GN/GY | 1216 | Right Rear Strut Position Sensor Signal | I | - |

## B154 Diesel Particulate Filter Exhaust Differential Pressure Sensor (LML)

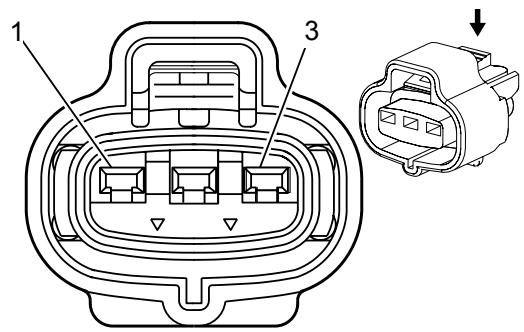


### Connector Part Information

Harness Type: Chassis

OEM Connector: 15401052

Service Connector: 88953311

Description: 3-Way F 090 Series, Sealed (BK)

### *Terminal Part Information*

| Terminal Type ID | Terminated Lead | Diagnostic Test Probe | Terminal Removal Tool | Service Terminal | Tray | Core Crimp | Insulation Crimp |
|---|---|---|---|---|---|---|---|
| I | Pending | Pending | Pending | Not Available | Not Available | Not Available | Not Available |

### *B154 Diesel Particulate Filter Exhaust Differential Pressure Sensor (LML)*

| Pin | Size | Color | Circuit | Function | Terminal Type ID | Option |
|---|---|---|---|---|---|---|
| 1 | 0.5 | BK/YE | 6055 | Exhaust Pressure Sensor Low Reference (1) | I | - |
| 2 | 0.5 | D-BU | 6053 | Exhaust Pressure Sensor Signal (1) | I | - |
| 3 | 0.5 | WH/RD | 6054 | Exhaust Pressure Sensor 5 Volt Reference (1) | I | - |

## B154 Diesel Particulate Filter Exhaust Differential Pressure Sensor

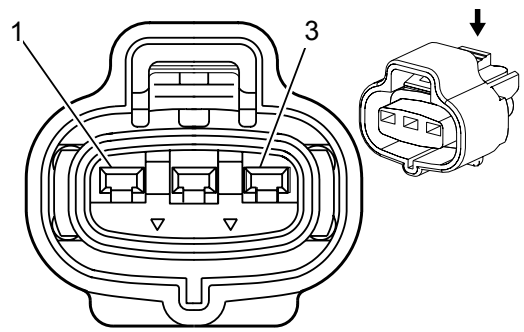


### Connector Part Information

Harness Type: Chassis

OEM Connector: 15401052

Service Connector: 88953311

Description: 3-Way F 090 Series, Sealed (BK)

### *Terminal Part Information*

| Terminal Type ID | Terminated Lead | Diagnostic Test Probe | Terminal Removal Tool | Service Terminal | Tray | Core Crimp | Insulation Crimp |
|---|---|---|---|---|---|---|---|
| I | Not Available | Not Available | Not Available | Not Available | Not Available | Not Available | Not Available |

### *B154 Diesel Particulate Filter Exhaust Differential Pressure Sensor*

| Pin | Size | Color | Circuit | Function | Terminal Type ID | Option |
|---|---|---|---|---|---|---|
| 1 | 0.5 | BK/YE | 6055 | Exhaust Pressure Sensor Low Reference (1) | I | - |
| 2 | 0.5 | D-BU | 6053 | Exhaust Pressure Sensor Signal (1) | I | - |
| 3 | 0.5 | WH/RD | 6054 | Exhaust Pressure Sensor 5 Volt Reference (1) | I | - |

## B181 Fuel Filter Pressure Sensor (LML)

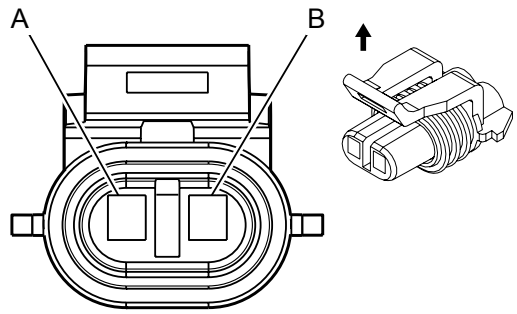


### Connector Part Information

Harness Type: Engine

OEM Connector: 12052641

Service Connector: 13586114

Description: 2-Way F 150 Metri Pack Series (BK)

### *Terminal Part Information*

| Terminal Type ID | Terminated Lead | Diagnostic Test Probe | Terminal Removal Tool | Service Terminal | Tray | Core Crimp | Insulation Crimp |
|---|---|---|---|---|---|---|---|
| I | Pending | J-35616-14 (GN) | J-38125-12A | 12160223 | 3 | Not Available | Not Available |

### *B181 Fuel Filter Pressure Sensor (LML)*

| Pin | Size | Color | Circuit | Function | Terminal Type ID | Option |
|---|---|---|---|---|---|---|
| A | 0 | GY/BK | 5765 | Fuel Filter Pressure Switch Signal | I | LML |
| B | 0 | BK | 450 | Ground | I | LML |

## B192 Throttle Inlet Absolute Pressure Sensor

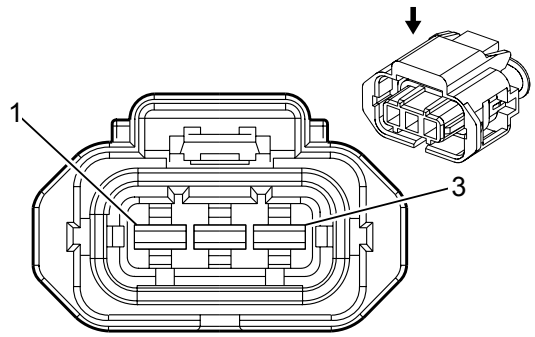


### Connector Part Information

Harness Type: Engine

OEM Connector: 13639747

Service Connector: POPA

Description: 3-Way F 2.8 Junior Power Timer Series, Sealed (BK)

### *Terminal Part Information*

| Terminal Type ID | Terminated Lead | Diagnostic Test Probe | Terminal Removal Tool | Service Terminal | Tray | Core Crimp | Insulation Crimp |
|---|---|---|---|---|---|---|---|
| I | 13578877 | J-35616-35 (VT) | J-38125-36 | 4-964286-1 | 16 | E | 1 |

### *B192 Throttle Inlet Absolute Pressure Sensor*

| Pin | Size | Color | Circuit | Function | Terminal Type ID | Option |
|---|---|---|---|---|---|---|
| 1 | 0.5 | WH/RD | 3201 | Throttle Inlet Absolute Pressure Sensor 5V Reference | I | - |
| 2 | 0.5 | WH/YE | 3202 | Throttle Inlet Absolute Pressure Sensor 5V Return | I | - |
| 3 | 0.5 | YE/WH | 3200 | Throttle Inlet Absolute Pressure Sensor Signal | I | - |

## B193A Charge Air Cooler Inlet Temperature Sensor (LML)

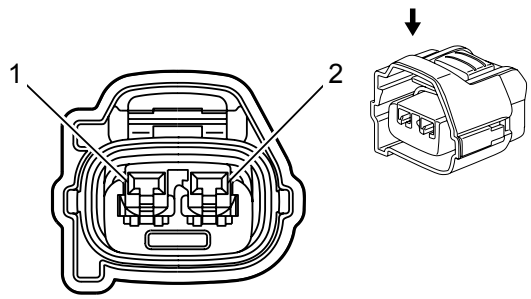


### Connector Part Information

Harness Type: Engine

OEM Connector: 7283-7020-10

Service Connector: 13576415

Description: 2-Way F 090 Series, Sealed (D-GY)

### *Terminal Part Information*

| Terminal Type ID | Terminated Lead | Diagnostic Test Probe | Terminal Removal Tool | Service Terminal | Tray | Core Crimp | Insulation Crimp |
|---|---|---|---|---|---|---|---|
| I | Pending | Pending | Pending | Not Available | Not Available | Not Available | Not Available |

### *B193A Charge Air Cooler Inlet Temperature Sensor (LML)*

| Pin | Size | Color | Circuit | Function | Terminal Type ID | Option |
|---|---|---|---|---|---|---|
| 1 | 0 | D-GN | 3683 | Charge Air Cooler Inlet Temperature Sensor Signal | I | LML |
| 2 | 0 | BK | 3682 | Charge Air Cooler Inlet Temperature Sensor Return | I | LML |

## B195A Nitrogen Oxides Sensor 1 (LML)

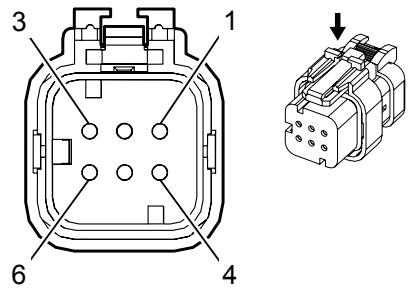


### Connector Part Information

Harness Type: Chassis

OEM Connector: 13734132

Service Connector: 13579574

Description: 6-Way F  (BK)

### *Terminal Part Information*

| Terminal Type ID | Terminated Lead | Diagnostic Test Probe | Terminal Removal Tool | Service Terminal | Tray | Core Crimp | Insulation Crimp |
|---|---|---|---|---|---|---|---|
| I | Pending | Pending | Pending | Not Available | Not Available | Not Available | Not Available |
| II | Pending | J-35616-4A (PU) | J-38125-11A | Not Available | Not Available | Not Available | Not Available |

### *B195A Nitrogen Oxides Sensor 1 (LML)*

| Pin | Size | Color | Circuit | Function | Terminal Type ID | Option |
|---|---|---|---|---|---|---|
| 1 | 0.75 | GY | 3672 | Nox Sensor (2) Supply Voltage | I | - |
| 2 | 0.5 | WH | 7494 | High Speed GMLAN Serial Data (-)(3) | II | - |
| 3 | 0.5 | D-BU/BK | 7493 | High Speed GMLAN Serial Data (+)(3) | II | - |
| 4 | 0.75 | BK/GY | 3671 | Nox Sensor (2) Ground | I | - |
| 5-6 | - | - | - | Not Occupied | - | - |

## B195A Nitrogen Oxides Sensor 1

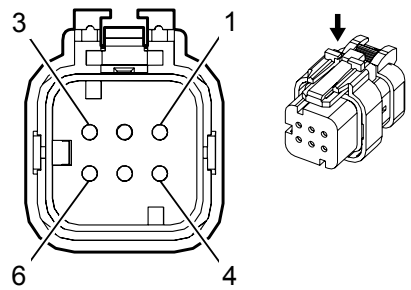


### Connector Part Information

Harness Type: Chassis

OEM Connector: 13734132

Service Connector: 13579574

Description: 6-Way F  (BK)

### *Terminal Part Information*

| Terminal Type ID | Terminated Lead | Diagnostic Test Probe | Terminal Removal Tool | Service Terminal | Tray | Core Crimp | Insulation Crimp |
|---|---|---|---|---|---|---|---|
| I | Not Available | J-35616-4A (PU) | J-38125-11A | Not Available | Not Available | Not Available | Not Available |

### *B195A Nitrogen Oxides Sensor 1*

| Pin | Size | Color | Circuit | Function | Terminal Type ID | Option |
|---|---|---|---|---|---|---|
| 1 | 0.75 | GY | 3672 | Nox Sensor (2) Supply Voltage | I | - |
| 2 | 0.5 | WH | 7494 | High Speed GMLAN Serial Data (-)(3) | I | - |
| 3 | 0.5 | D-BU/BK | 7493 | High Speed GMLAN Serial Data (+)(3) | I | - |
| 4 | 0.75 | BK/GY | 3671 | Nox Sensor (2) Ground | I | - |
| 5-6 | - | - | - | Not Occupied | - | - |

## B195A Nitrogen Oxides Sensor 1

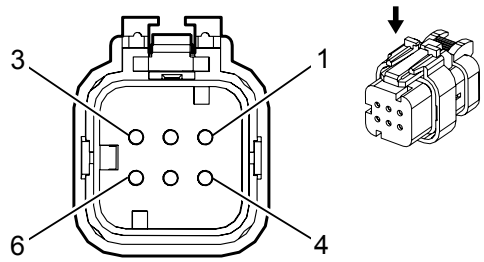


### Connector Part Information

Harness Type: Engine

OEM Connector: 13738257

Service Connector: 13578974

Description: 6-Way F 2.8 Series, Sealed (BK)

### *Terminal Part Information*

| Terminal Type ID | Terminated Lead | Diagnostic Test Probe | Terminal Removal Tool | Service Terminal | Tray | Core Crimp | Insulation Crimp |
|---|---|---|---|---|---|---|---|
| I | Not Available | J-35616-66 (YE) | J-38125-11A | 776491-1 | 17 | C | Not Available |
| II | Not Available | J-35616-4A (PU) | J-38125-11A | Not Available | Not Available | Not Available | Not Available |

### *B195A Nitrogen Oxides Sensor 1*

| Pin | Size | Color | Circuit | Function | Terminal Type ID | Option |
|---|---|---|---|---|---|---|
| 1 | 1.5 | VT/D-BU | 3674 | Nox Sensor (1) Supply Voltage | I | - |
| 2 | 0.5 | WH | 7494 | High Speed GMLAN Serial Data (-)(3) | II | - |
| 3 | 0.5 | D-BU/BK | 7493 | High Speed GMLAN Serial Data (+)(3) | II | - |
| 4 | 1.5 | BK/D-BU | 3673 | Nox Sensor (1) Ground | I | - |
| 5 | 0.5 | WH | 7494 | High Speed GMLAN Serial Data (-)(3) | II | - |
| 6 | 0.5 | D-BU/BK | 7493 | High Speed GMLAN Serial Data (+)(3) | II | - |

## B198 Fuel Composition Sensor

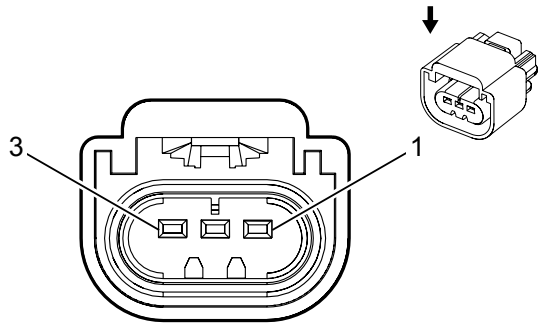


### Connector Part Information

Harness Type: Chassis

OEM Connector: 13511132

Service Connector: 19301582

Description: 3-Way F 150 GT Series, Sealed (BN)

### *Terminal Part Information*

| Terminal Type ID | Terminated Lead | Diagnostic Test Probe | Terminal Removal Tool | Service Terminal | Tray | Core Crimp | Insulation Crimp |
|---|---|---|---|---|---|---|---|
| I | 13575298 | J-35616-2A (GY) | J-38125-553 | 12191819 | 8 | E | 1 |

### *B198 Fuel Composition Sensor*

| Pin | Size | Color | Circuit | Function | Terminal Type ID | Option |
|---|---|---|---|---|---|---|
| 1 | 0.5 | VT/D-BU | 5294 | Powertrain Main Relay Fused Supply (5) | I | - |
| 2 | 0.5 | BK | 2150 | Ground | I | - |
| 3 | 0.5 | WH | 1579 | Fuel Temperature/Composition Signal | I | - |

## B215 Fuel Filter Pressure Switch (LML)

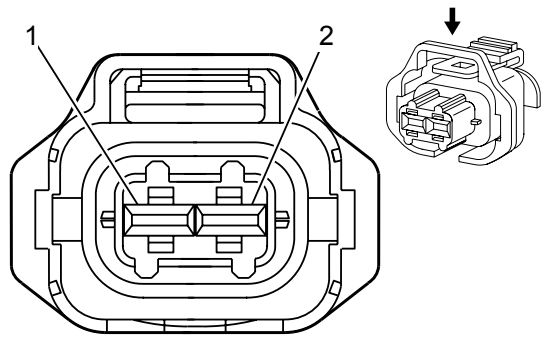


### Connector Part Information

Harness Type: Engine

OEM Connector: 1928403874

Service Connector: 88988963

Description: 2-Way F Kompakt 2.8 Series, Sealed (BK)

### *Terminal Part Information*

| Terminal Type ID | Terminated Lead | Diagnostic Test Probe | Terminal Removal Tool | Service Terminal | Tray | Core Crimp | Insulation Crimp |
|---|---|---|---|---|---|---|---|
| I | Pending | Pending | Pending | Not Available | Not Available | Not Available | Not Available |

### *B215 Fuel Filter Pressure Switch (LML)*

| Pin | Size | Color | Circuit | Function | Terminal Type ID | Option |
|---|---|---|---|---|---|---|
| 1 | 0 | YE | 2928 | Fuel Metering Valve High Control | I | LML |
| 2 | 0 | BK | 2929 | Fuel Metering Valve Low Control | I | LML |

## B227 Gear Position Sensor

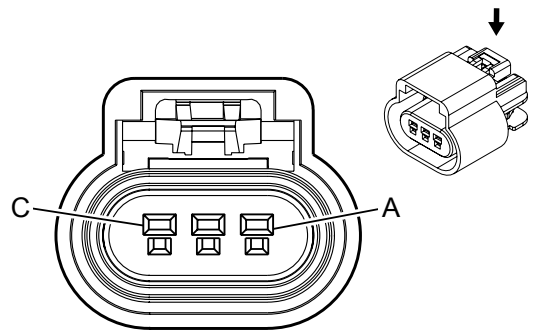


### Connector Part Information

Harness Type: Engine

OEM Connector: 15326808

Service Connector: SEE NOTE

Description: 3-Way F 150 GT Series, Sealed (BK)

### *Terminal Part Information*

| Terminal Type ID | Terminated Lead | Diagnostic Test Probe | Terminal Removal Tool | Service Terminal | Tray | Core Crimp | Insulation Crimp |
|---|---|---|---|---|---|---|---|
| I | 13575298 | J-35616-2A (GY) | J-38125-553 | 12191819 | 8 | E | 1 |

### *B227 Gear Position Sensor*

| Pin | Size | Color | Circuit | Function | Terminal Type ID | Option |
|---|---|---|---|---|---|---|
| A | 0.5 | YE/BK | 7478 | Rotary Position Sensor Return | I | - |
| B | 0.5 | WH/RD | 7477 | Rotary Position Sensor Supply 5V | I | - |
| C | 0.5 | WH/L-GN | 7479 | Rotary Position Sensor Signal | I | - |

## E1C Accent Lamp - Driver Door Handle

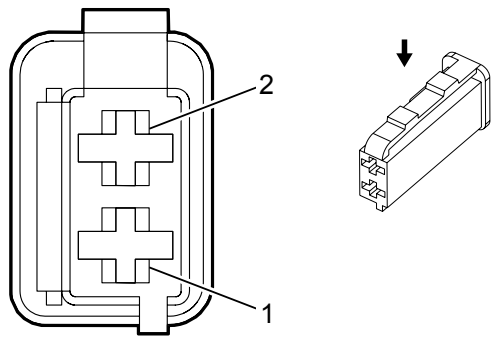


### Connector Part Information

Harness Type: Driver Door Trim

OEM Connector: 13670097

Service Connector: 13580951

Description: 2-Way F 1.6 Timer Series (BK)

### *Terminal Part Information*

| Terminal Type ID | Terminated Lead | Diagnostic Test Probe | Terminal Removal Tool | Service Terminal | Tray | Core Crimp | Insulation Crimp |
|---|---|---|---|---|---|---|---|
| I | Pending | J-35616-14 (GN) | J-38125-560 | 962943-5 | 16 | Not Available | Not Available |

### *E1C Accent Lamp - Driver Door Handle*

| Pin | Size | Color | Circuit | Function | Terminal Type ID | Option |
|---|---|---|---|---|---|---|
| 1 | 0.35 | WH/YE | 7557 | LED Ambient Lighting Control 1 | I | - |
| 2 | 0.35 | BK | 1150 | Ground | I | - |

## E1L Accent Lamp - Overhead Console

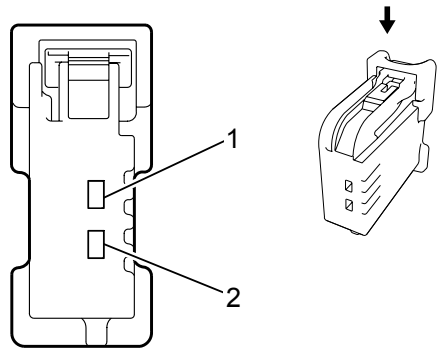


### Connector Part Information

Harness Type: Overhead Console

OEM Connector: 13595207

Service Connector: 13584097

Description: 2-Way F 0.64, 1.5 Series (BK)

### *Terminal Part Information*

| Terminal Type ID | Terminated Lead | Diagnostic Test Probe | Terminal Removal Tool | Service Terminal | Tray | Core Crimp | Insulation Crimp |
|---|---|---|---|---|---|---|---|
| I | 13327110 | J-35616-2A (GY) | J-38125-553 | 12191812 | 19 | E | C |

### *E1L Accent Lamp - Overhead Console*

| Pin | Size | Color | Circuit | Function | Terminal Type ID | Option |
|---|---|---|---|---|---|---|
| 1 | 0.35 | VT/L-GN | 7558 | LED Ambient Lighting Control 2 | I | - |
| 2 | 0.35 | BK | 1050 | Ground | I | - |

## E1M Accent Lamp - Passenger Door Handle

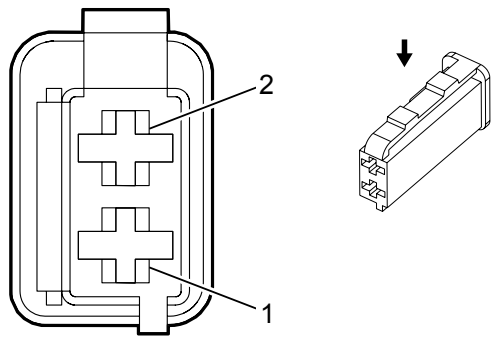


### Connector Part Information

Harness Type: Passenger Door Trim

OEM Connector: 13670097

Service Connector: 13580951

Description: 2-Way F 1.6 Timer Series (BK)

### *Terminal Part Information*

| Terminal Type ID | Terminated Lead | Diagnostic Test Probe | Terminal Removal Tool | Service Terminal | Tray | Core Crimp | Insulation Crimp |
|---|---|---|---|---|---|---|---|
| I | Pending | J-35616-14 (GN) | J-38125-560 | 962943-5 | 16 | Not Available | Not Available |
| II | Pending | J-35616-14 (GN) | J-38125-560 | 964274-2 | 16 | E | 1 |

### *E1M Accent Lamp - Passenger Door Handle*

| Pin | Size | Color | Circuit | Function | Terminal Type ID | Option |
|---|---|---|---|---|---|---|
| 1 | 0.35 | WH/YE | 7557 | LED Ambient Lighting Control 1 | I | - |
| 2 | 0.35 | BK | 1250 | Ground | I | - |

## E2A Marker Lamp - Endgate

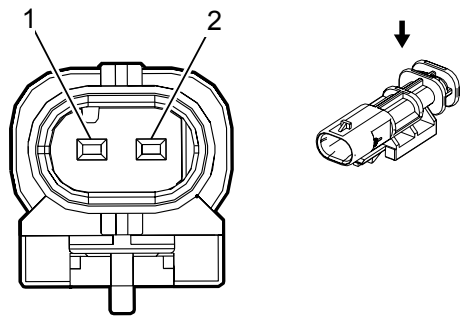


### Connector Part Information

Harness Type: Rear Clearance Lamps (Right) Jumper

OEM Connector: 13788295

Service Connector: Service by Harness - See Part Catalog

Description: 2-Way M 1.2 MLK Series, Sealed (BK)

### *Terminal Part Information*

| Terminal Type ID | Terminated Lead | Diagnostic Test Probe | Terminal Removal Tool | Service Terminal | Tray | Core Crimp | Insulation Crimp |
|---|---|---|---|---|---|---|---|
| I | Pending | Pending | Pending | Not Available | Not Available | Not Available | Not Available |

### *E2A Marker Lamp - Endgate*

| Pin | Size | Color | Circuit | Function | Terminal Type ID | Option |
|---|---|---|---|---|---|---|
| 1 | 0.5 | GY/BN | 309 | Right Park Lamp Supply Voltage | I | - |
| 2 | 0.5 | BK | 1750 | Ground | I | - |

## E3A Roof Clearance Lamp - Left Front Outer

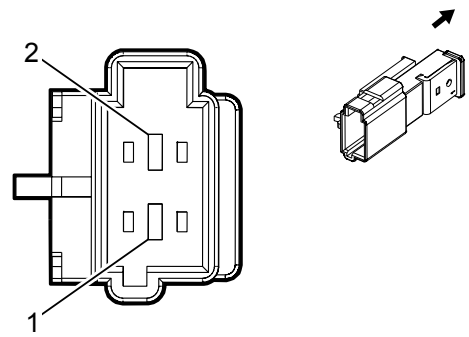


### Connector Part Information

Harness Type: Headliner

OEM Connector: 13662506

Service Connector: 13574780

Description: 2-Way M 1.6 Timer Series (BK)

### *Terminal Part Information*

| Terminal Type ID | Terminated Lead | Diagnostic Test Probe | Terminal Removal Tool | Service Terminal | Tray | Core Crimp | Insulation Crimp |
|---|---|---|---|---|---|---|---|
| I | 13587483 | J-35616-14 (GN) | J-38125-560 | 964265-2 | 28 | E | 2 |

### *E3A Roof Clearance Lamp - Left Front Outer*

| Pin | Size | Color | Circuit | Function | Terminal Type ID | Option |
|---|---|---|---|---|---|---|
| 1 | 0.5 | VT/GY | 709 | Left Park Lamp Supply Voltage | I | - |
| 2 | 0.5 | BK | 1050 | Ground | I | - |

## E3B Roof Clearance Lamp - Left Front Inner

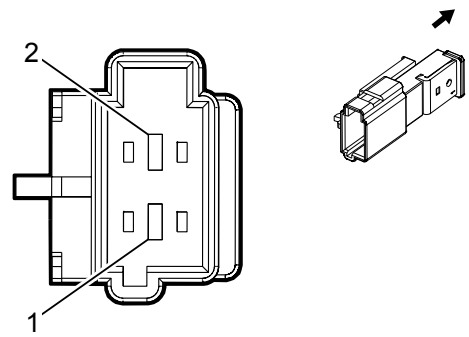


### Connector Part Information

Harness Type: Headliner

OEM Connector: 13662506

Service Connector: 13574780

Description: 2-Way M 1.6 Timer Series (BK)

### *Terminal Part Information*

| Terminal Type ID | Terminated Lead | Diagnostic Test Probe | Terminal Removal Tool | Service Terminal | Tray | Core Crimp | Insulation Crimp |
|---|---|---|---|---|---|---|---|
| I | 13587483 | J-35616-14 (GN) | J-38125-560 | 964265-2 | 28 | E | 2 |

### *E3B Roof Clearance Lamp - Left Front Inner*

| Pin | Size | Color | Circuit | Function | Terminal Type ID | Option |
|---|---|---|---|---|---|---|
| 1 | 0.5 | VT/GY | 709 | Left Park Lamp Supply Voltage | I | - |
| 2 | 0.5 | BK | 1050 | Ground | I | - |

## E3C Roof Clearance Lamp - Front Middle

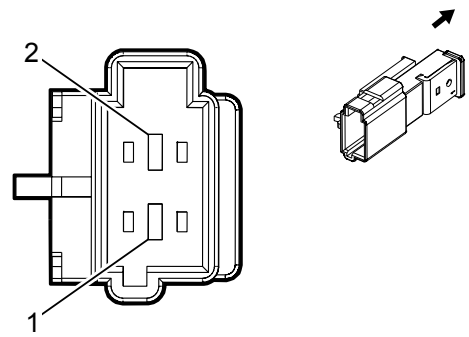


### Connector Part Information

Harness Type: Headliner

OEM Connector: 13662506

Service Connector: 13574780

Description: 2-Way M 1.6 Timer Series (BK)

### *Terminal Part Information*

| Terminal Type ID | Terminated Lead | Diagnostic Test Probe | Terminal Removal Tool | Service Terminal | Tray | Core Crimp | Insulation Crimp |
|---|---|---|---|---|---|---|---|
| I | 13587483 | J-35616-14 (GN) | J-38125-560 | 964265-2 | 28 | E | 2 |

### *E3C Roof Clearance Lamp - Front Middle*

| Pin | Size | Color | Circuit | Function | Terminal Type ID | Option |
|---|---|---|---|---|---|---|
| 1 | 0.5 | VT/GY | 709 | Left Park Lamp Supply Voltage | I | - |
| 2 | 0.5 | BK | 1050 | Ground | I | - |

## E3D Roof Clearance Lamp - Right Front Inner

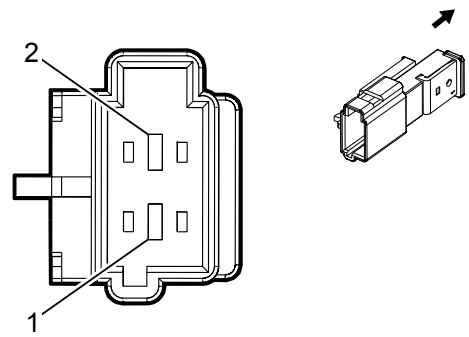


### Connector Part Information

Harness Type: Headliner

OEM Connector: 13662506

Service Connector: 13574780

Description: 2-Way M 1.6 Timer Series (BK)

### *Terminal Part Information*

| Terminal Type ID | Terminated Lead | Diagnostic Test Probe | Terminal Removal Tool | Service Terminal | Tray | Core Crimp | Insulation Crimp |
|---|---|---|---|---|---|---|---|
| I | 13587483 | J-35616-14 (GN) | J-38125-560 | 964265-2 | 28 | E | 2 |

### *E3D Roof Clearance Lamp - Right Front Inner*

| Pin | Size | Color | Circuit | Function | Terminal Type ID | Option |
|---|---|---|---|---|---|---|
| 1 | 0.5 | VT/GY | 709 | Left Park Lamp Supply Voltage | I | - |
| 2 | 0.5 | BK | 1050 | Ground | I | - |

## E3E Roof Clearance Lamp - Right Front Outer

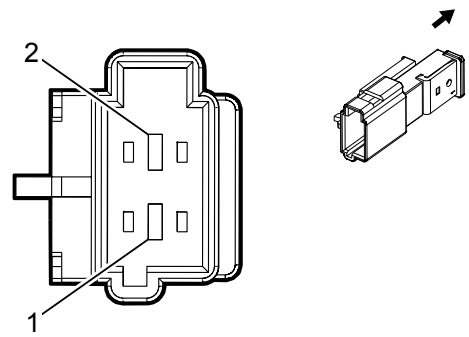


### Connector Part Information

Harness Type: Headliner

OEM Connector: 13662506

Service Connector: 13574780

Description: 2-Way M 1.6 Timer Series (BK)

### *Terminal Part Information*

| Terminal Type ID | Terminated Lead | Diagnostic Test Probe | Terminal Removal Tool | Service Terminal | Tray | Core Crimp | Insulation Crimp |
|---|---|---|---|---|---|---|---|
| I | 13587483 | J-35616-14 (GN) | J-38125-560 | 964265-2 | 28 | E | 2 |

### *E3E Roof Clearance Lamp - Right Front Outer*

| Pin | Size | Color | Circuit | Function | Terminal Type ID | Option |
|---|---|---|---|---|---|---|
| 1 | 0.5 | VT/GY | 709 | Left Park Lamp Supply Voltage | I | - |
| 2 | 0.5 | BK | 1050 | Ground | I | - |

## E3LF Rear Fender Clearance Lamp - Left Front

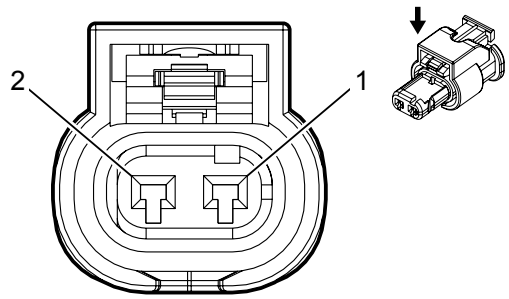


### Connector Part Information

Harness Type: Rear Clearance Lamps (Left) Jumper

OEM Connector: 13627836

Service Connector: No SDC/FSU

Description: 2-Way F 1.2 MCP Series, Sealed (BK)

### *Terminal Part Information*

| Terminal Type ID | Terminated Lead | Diagnostic Test Probe | Terminal Removal Tool | Service Terminal | Tray | Core Crimp | Insulation Crimp |
|---|---|---|---|---|---|---|---|
| I | Pending | J-35616-64B (L-BU) | J-38125-12A | Not Available | Not Available | Not Available | Not Available |

### *E3LF Rear Fender Clearance Lamp - Left Front*

| Pin | Size | Color | Circuit | Function | Terminal Type ID | Option |
|---|---|---|---|---|---|---|
| 1 | 0.5 | VT/GY | 709 | Left Park Lamp Supply Voltage | I | - |
| 2 | 0.5 | BK | 1750 | Ground | I | - |

## E3LR Rear Fender Clearance Lamp - Left Rear

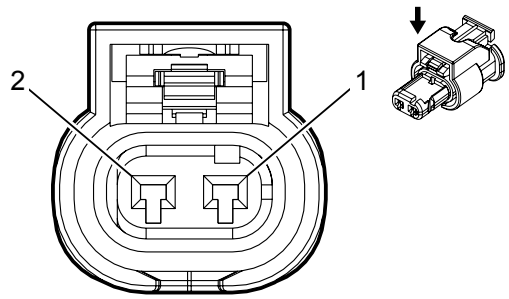


### Connector Part Information

Harness Type: Rear Clearance Lamps (Left) Jumper

OEM Connector: 13627836

Service Connector: No SDC/FSU

Description: 2-Way F 1.2 MCP Series, Sealed (BK)

### *Terminal Part Information*

| Terminal Type ID | Terminated Lead | Diagnostic Test Probe | Terminal Removal Tool | Service Terminal | Tray | Core Crimp | Insulation Crimp |
|---|---|---|---|---|---|---|---|
| I | Pending | J-35616-64B (L-BU) | J-38125-12A | Not Available | Not Available | Not Available | Not Available |

### *E3LR Rear Fender Clearance Lamp - Left Rear*

| Pin | Size | Color | Circuit | Function | Terminal Type ID | Option |
|---|---|---|---|---|---|---|
| 1 | 0.5 | VT/GY | 709 | Left Park Lamp Supply Voltage | I | - |
| 2 | 0.5 | BK | 1750 | Ground | I | - |

## E3RF Rear Fender Clearance Lamp - Right Front

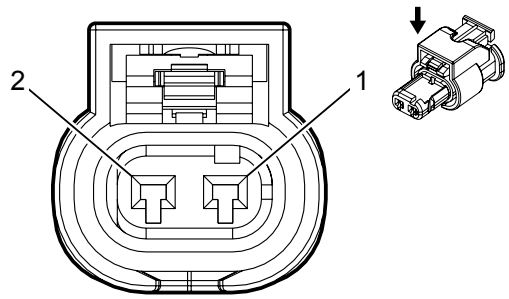


### Connector Part Information

Harness Type: Rear Clearance Lamps (Right) Jumper

OEM Connector: 13627836

Service Connector: No SDC/FSU

Description: 2-Way F 1.2 MCP Series, Sealed (BK)

### *Terminal Part Information*

| Terminal Type ID | Terminated Lead | Diagnostic Test Probe | Terminal Removal Tool | Service Terminal | Tray | Core Crimp | Insulation Crimp |
|---|---|---|---|---|---|---|---|
| I | Pending | J-35616-64B (L-BU) | J-38125-12A | Not Available | Not Available | Not Available | Not Available |

### *E3RF Rear Fender Clearance Lamp - Right Front*

| Pin | Size | Color | Circuit | Function | Terminal Type ID | Option |
|---|---|---|---|---|---|---|
| 1 | 0.5 | GY/BN | 309 | Right Park Lamp Supply Voltage | I | - |
| 2 | 0.5 | BK | 1750 | Ground | I | - |

## E3RR Rear Fender Clearance Lamp - Right Rear

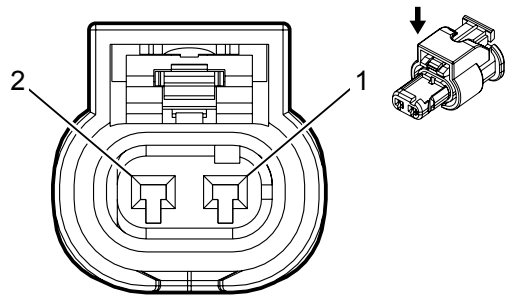


### Connector Part Information

Harness Type: Rear Clearance Lamps (Right) Jumper

OEM Connector: 13627836

Service Connector: No SDC/FSU

Description: 2-Way F 1.2 MCP Series, Sealed (BK)

### *Terminal Part Information*

| Terminal Type ID | Terminated Lead | Diagnostic Test Probe | Terminal Removal Tool | Service Terminal | Tray | Core Crimp | Insulation Crimp |
|---|---|---|---|---|---|---|---|
| I | Pending | J-35616-64B (L-BU) | J-38125-12A | Not Available | Not Available | Not Available | Not Available |

### *E3RR Rear Fender Clearance Lamp - Right Rear*

| Pin | Size | Color | Circuit | Function | Terminal Type ID | Option |
|---|---|---|---|---|---|---|
| 1 | 0.5 | GY/BN | 309 | Right Park Lamp Supply Voltage | I | - |
| 2 | 0.5 | BK | 1750 | Ground | I | - |

## E4AC Park/Daytime Running Lamp - Left

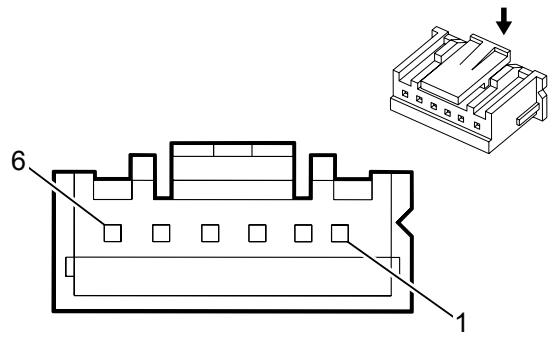


### Connector Part Information

Harness Type:

OEM Connector: PAP-06V-S

Service Connector: Service by Harness – See Part Catalog

Description: 6 F 050 Series (NA)

### *Terminal Part Information*

| Terminal Type ID | Terminated Lead | Diagnostic Test Probe | Terminal Removal Tool | Service Terminal | Tray | Core Crimp | Insulation Crimp |
|---|---|---|---|---|---|---|---|
| I | Not Available | Not Available | Not Available | Not Available | Not Available | Not Available | Not Available |

### *E4AC Park/Daytime Running Lamp - Left*

| Pin | Size | Color | Circuit | Function | Terminal Type ID | Option |
|---|---|---|---|---|---|---|
| 1 | 0.5 | OG | - | Park/DRL LED + | I | Z88 |
| 2 | 0.5 | VT | - | Park/DRL LED - | I | Z88 |
| 3 | 0.5 | PK | - | DRL CTN | I | Z88 |
| 4 | 0.5 | L-GN | - | DRL BIN | I | Z88 |
| 5 | 0.5 | L-BU | - | Ground | I | Z88 |
| 6 | - | - | - | Not Occupied | - | - |

## E4AD Park/Daytime Running Lamp - Right

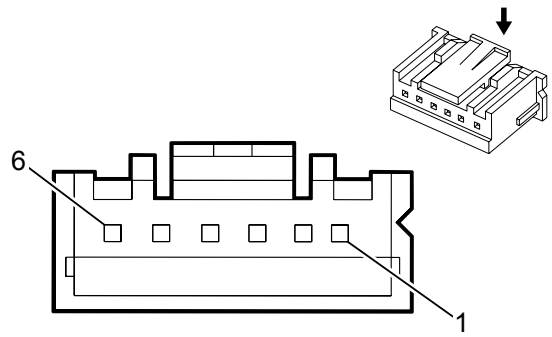


### Connector Part Information

Harness Type:

OEM Connector: PAP-06V-S

Service Connector: Service by Harness – See Part Catalog

Description: 6 F 050 Series (NA)

### *Terminal Part Information*

| Terminal Type ID | Terminated Lead | Diagnostic Test Probe | Terminal Removal Tool | Service Terminal | Tray | Core Crimp | Insulation Crimp |
|---|---|---|---|---|---|---|---|
| I | Not Available | Not Available | Not Available | Not Available | Not Available | Not Available | Not Available |

### *E4AD Park/Daytime Running Lamp - Right*

| Pin | Size | Color | Circuit | Function | Terminal Type ID | Option |
|---|---|---|---|---|---|---|
| 1 | 0.5 | OG | - | Park/DRL LED + | I | Z88 |
| 2 | 0.5 | VT | - | Park/DRL LED - | I | Z88 |
| 3 | 0.5 | PK | - | DRL CTN | I | Z88 |
| 4 | 0.5 | L-GN | - | DRL BIN | I | Z88 |
| 5 | 0.5 | L-BU | - | Ground | I | Z88 |
| 6 | - | - | - | Not Occupied | - | - |

## E4G Headlamp – Left Low Beam

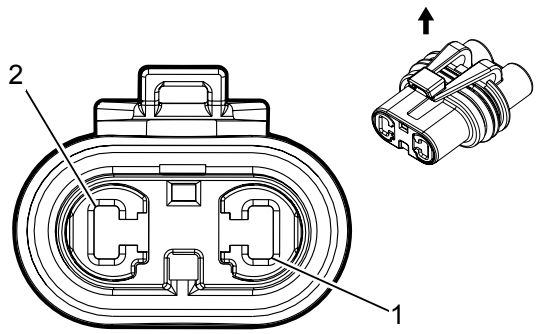


### Connector Part Information

Harness Type:

OEM Connector: F412210

Service Connector: Service by Harness – See Part Catalog

Description: 2 F Sealed (BK)

### *Terminal Part Information*

| Terminal Type ID | Terminated Lead | Diagnostic Test Probe | Terminal Removal Tool | Service Terminal | Tray | Core Crimp | Insulation Crimp |
|---|---|---|---|---|---|---|---|
| I | Not Available | Not Available | Not Available | Not Available | Not Available | Not Available | Not Available |

### *E4G Headlamp – Left Low Beam*

| Pin | Size | Color | Circuit | Function | Terminal Type ID | Option |
|---|---|---|---|---|---|---|
| 1 | 0.5 | RD | 712 | Left Headlamp Low Beam Supply Voltage | I | - |
| 2 | 0.5 | BK | 150 | Ground | I | - |

## E4H Headlamp – Right Low Beam

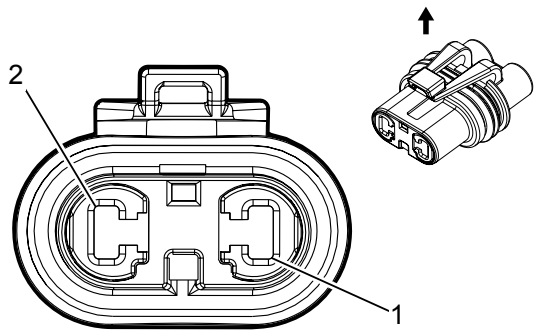


### Connector Part Information

Harness Type:

OEM Connector: F412210

Service Connector: Service by Harness – See Part Catalog

Description: 2 F Sealed (BK)

### *Terminal Part Information*

| Terminal Type ID | Terminated Lead | Diagnostic Test Probe | Terminal Removal Tool | Service Terminal | Tray | Core Crimp | Insulation Crimp |
|---|---|---|---|---|---|---|---|
| I | Not Available | Not Available | Not Available | Not Available | Not Available | Not Available | Not Available |

### *E4H Headlamp – Right Low Beam*

| Pin | Size | Color | Circuit | Function | Terminal Type ID | Option |
|---|---|---|---|---|---|---|
| 1 | 0.5 | RD | 312 | Right Headlamp Low Beam Supply Voltage | I | - |
| 2 | 0.5 | BK | 250 | Ground | I | - |

## E4J Park Lamp - Left Front

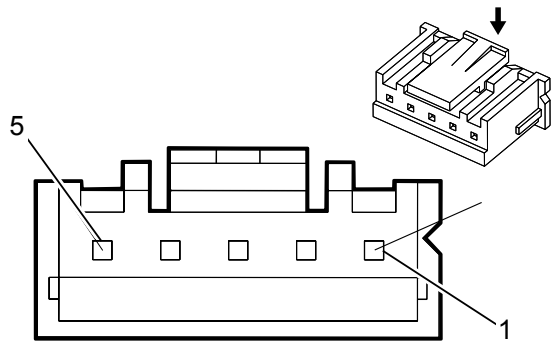


### Connector Part Information

Harness Type:

OEM Connector: PAP-05V-S

Service Connector: Service by Harness – See Part Catalog

Description: 5 F 050 Series (NA)

### *Terminal Part Information*

| Terminal Type ID | Terminated Lead | Diagnostic Test Probe | Terminal Removal Tool | Service Terminal | Tray | Core Crimp | Insulation Crimp |
|---|---|---|---|---|---|---|---|
| I | Not Available | Not Available | Not Available | Not Available | Not Available | Not Available | Not Available |

### *E4J Park Lamp - Left Front*

| Pin | Size | Color | Circuit | Function | Terminal Type ID | Option |
|---|---|---|---|---|---|---|
| 1 | 0.5 | YE | - | Park Lamp LED + | I | Z88 |
| 2 | 0.5 | RD | - | Park Lamp LED - | I | Z88 |
| 3 | 0.5 | D-BU | - | Park Lamp CTN | I | Z88 |
| 4 | 0.5 | D-GN | - | Park Lamp BIN | I | Z88 |
| 5 | 0.5 | WH | - | Ground | I | Z88 |

## E4K Park Lamp - Right Front

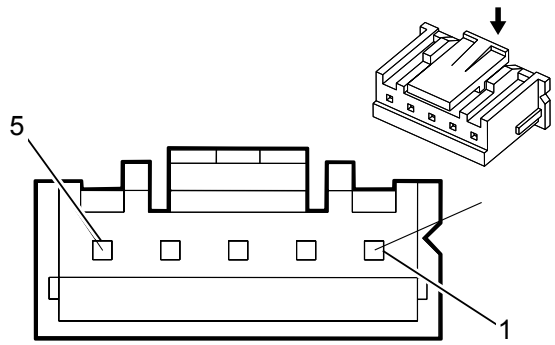


### Connector Part Information

Harness Type:

OEM Connector: PAP-05V-S

Service Connector: Service by Harness – See Part Catalog

Description: 5 F 050 Series (NA)

### *Terminal Part Information*

| Terminal Type ID | Terminated Lead | Diagnostic Test Probe | Terminal Removal Tool | Service Terminal | Tray | Core Crimp | Insulation Crimp |
|---|---|---|---|---|---|---|---|
| I | Not Available | Not Available | Not Available | Not Available | Not Available | Not Available | Not Available |

### *E4K Park Lamp - Right Front*

| Pin | Size | Color | Circuit | Function | Terminal Type ID | Option |
|---|---|---|---|---|---|---|
| 1 | 0.5 | YE | - | Park Lamp LED + | I | Z88 |
| 2 | 0.5 | RD | - | Park Lamp LED - | I | Z88 |
| 3 | 0.5 | D-BU | - | Park Lamp CTN | I | Z88 |
| 4 | 0.5 | D-GN | - | Park Lamp BIN | I | Z88 |
| 5 | 0.5 | WH | - | Ground | I | Z88 |

## E4N Park/Turn Signal Lamp – Left

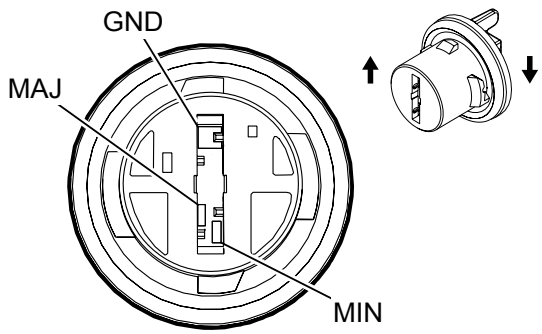


### Connector Part Information

Harness Type:

OEM Connector: EEM0383

Service Connector: Service by Harness – See Part Catalog

Description: 3 F Lamp Socket (BK)

### *Terminal Part Information*

| Terminal Type ID | Terminated Lead | Diagnostic Test Probe | Terminal Removal Tool | Service Terminal | Tray | Core Crimp | Insulation Crimp |
|---|---|---|---|---|---|---|---|
| I | Not Available | Not Available | Not Available | Not Available | Not Available | Not Available | Not Available |

### *E4N Park/Turn Signal Lamp – Left*

| Pin | Size | Color | Circuit | Function | Terminal Type ID | Option |
|---|---|---|---|---|---|---|
| GND | 0.5 | BK | 150 | Ground | I | Z88 |
| MAJ | 0.5 | D-BU | 1314 | Left Front Turn Signal Lamp Supply Voltage | I | Z88 |
| MIN | 0.5 | VT/GY | 709 | Left Park Lamp Supply Voltage | I | Z88 |

## E4P Park/Turn Signal Lamp – Right

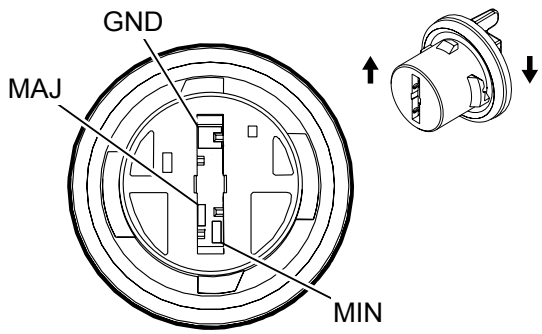


### Connector Part Information

Harness Type:

OEM Connector: EEM0383

Service Connector: Service by Harness – See Part Catalog

Description: 3 F Lamp Socket (BK)

### *Terminal Part Information*

| Terminal Type ID | Terminated Lead | Diagnostic Test Probe | Terminal Removal Tool | Service Terminal | Tray | Core Crimp | Insulation Crimp |
|---|---|---|---|---|---|---|---|
| I | Not Available | Not Available | Not Available | Not Available | Not Available | Not Available | Not Available |

### *E4P Park/Turn Signal Lamp – Right*

| Pin | Size | Color | Circuit | Function | Terminal Type ID | Option |
|---|---|---|---|---|---|---|
| GND | 0.5 | BK | 250 | Ground | I | Z88 |
| MAJ | 0.5 | D-BU | 1315 | Right Front Turn Signal Lamp Supply Voltage | I | Z88 |
| MIN | 0.5 | VT/GY | 309 | Right Park Lamp Supply Voltage | I | Z88 |

## E6 Center High Mounted Stop Lamp

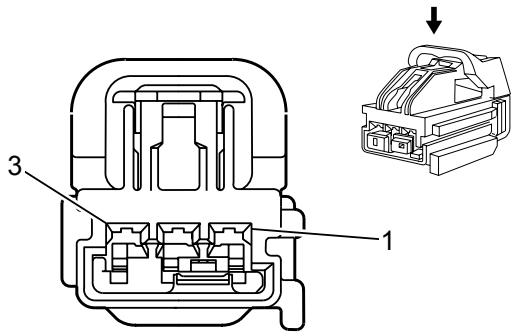


### Connector Part Information

Harness Type: Headliner

OEM Connector: 10847008

Service Connector: 19149536

Description: 3-Way F 1.5 Kaizen Series (L-GY)

### *Terminal Part Information*

| Terminal Type ID | Terminated Lead | Diagnostic Test Probe | Terminal Removal Tool | Service Terminal | Tray | Core Crimp | Insulation Crimp |
|---|---|---|---|---|---|---|---|
| I | Not Available | J-35616-2A (GY) | J-38125-11A | 7116-4101-08 | 9 | E | A |
| II | Not Available | J-35616-2A (GY) | J-38125-11A | 7116-4100-08 | 9 | E | C |

### *E6 Center High Mounted Stop Lamp*

| Pin | Size | Color | Circuit | Function | Terminal Type ID | Option |
|---|---|---|---|---|---|---|
| 1 | 0.75 | WH/VT | 1430 | Exterior Courtesy Lamp Supply Voltage | I | - |
| 2 | 0.5 | VT/GY | 1054 | Stop Lamp Supply Voltage | II | - |
| 3 | 0.5 | BK | 1050 | Ground | II | - |

## E7L License Plate Lamp - Left

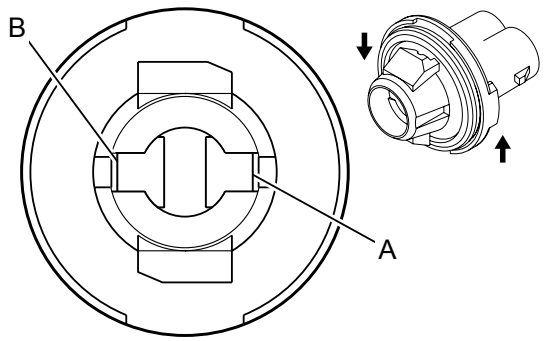


### Connector Part Information

Harness Type: Rear Bumper

OEM Connector: 15324946

Service Connector: Service by Harness - See Part Catalog

Description: 2-Way F Lamp Socket Wedge Base W2 (D-GY)

### *Terminal Part Information*

| Terminal Type ID | Terminated Lead | Diagnostic Test Probe | Terminal Removal Tool | Service Terminal | Tray | Core Crimp | Insulation Crimp |
|---|---|---|---|---|---|---|---|
| I | Not Available | No Tool Required | No Tool Required | 12124471 | 5 | 2 | 3 |

### *E7L License Plate Lamp - Left*

| Pin | Size | Color | Circuit | Function | Terminal Type ID | Option |
|---|---|---|---|---|---|---|
| A | 0.5 | L-GN/YE | 6846 | Rear License Lamp Supply Voltage | I | - |
| B | 0.5 | BK | 1750 | Ground | I | - |

## E7R License Plate Lamp - Right

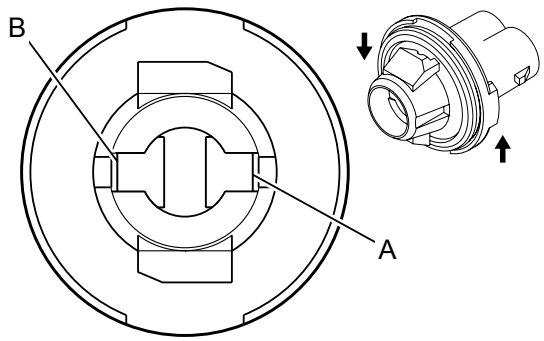


### Connector Part Information

Harness Type: Rear Bumper

OEM Connector: 15324946

Service Connector: Service by Harness - See Part Catalog

Description: 2-Way F Lamp Socket Wedge Base W2 (D-GY)

### *Terminal Part Information*

| Terminal Type ID | Terminated Lead | Diagnostic Test Probe | Terminal Removal Tool | Service Terminal | Tray | Core Crimp | Insulation Crimp |
|---|---|---|---|---|---|---|---|
| I | Not Available | No Tool Required | No Tool Required | 12124471 | 5 | 2 | 3 |

### *E7R License Plate Lamp - Right*

| Pin | Size | Color | Circuit | Function | Terminal Type ID | Option |
|---|---|---|---|---|---|---|
| A | 0.5 | L-GN/YE | 6846 | Rear License Lamp Supply Voltage | I | - |
| B | 0.5 | BK | 1750 | Ground | I | - |

## E8YD Outside Rearview Mirror Courtesy Lamp - Driver

### Connector Part Information

Harness Type:

OEM Connector: MHFC502W

Service Connector: Service by Harness – See Part Catalog

Description: 2 F  (BK)

### *Terminal Part Information*

| Terminal Type ID | Terminated Lead | Diagnostic Test Probe | Terminal Removal Tool | Service Terminal | Tray | Core Crimp | Insulation Crimp |
|---|---|---|---|---|---|---|---|
| I | Not Available | Not Available | Not Available | Not Available | Not Available | Not Available | Not Available |

### *E8YD Outside Rearview Mirror Courtesy Lamp - Driver*

| Pin | Size | Color | Circuit | Function | Terminal Type ID | Option |
|---|---|---|---|---|---|---|
| 1 | 0.35 | OG/WH | 5996 | Driver Outside Rear View Mirror Puddle Lamp Supply Voltage | I | - |
| 2 | 0.35 | BK/WH | 1150 | Ground | I | - |

## E8YP Outside Rearview Mirror Courtesy Lamp - Passenger

### Connector Part Information

Harness Type:

OEM Connector: MHFC502W

Service Connector: Service by Harness – See Part Catalog

Description: 2 F  (BK)

### *Terminal Part Information*

| Terminal Type ID | Terminated Lead | Diagnostic Test Probe | Terminal Removal Tool | Service Terminal | Tray | Core Crimp | Insulation Crimp |
|---|---|---|---|---|---|---|---|
| I | Not Available | Not Available | Not Available | Not Available | Not Available | Not Available | Not Available |

### *E8YP Outside Rearview Mirror Courtesy Lamp - Passenger*

| Pin | Size | Color | Circuit | Function | Terminal Type ID | Option |
|---|---|---|---|---|---|---|
| 1 | 0.35 | OG/WH | 5996 | Driver Outside Rear View Mirror Puddle Lamp Supply Voltage | I | - |
| 2 | 0.35 | BK/WH | 1250 | Ground | I | - |

# GRAPHIC PENDING

## Connector Part Information

Harness Type: Engine

OEM Connector: 7009-1338-02

Service Connector: Pending

Description: 1-Way  Ring Terminal

### *Terminal Part Information*

| Terminal Type ID | Terminated Lead | Diagnostic Test Probe | Terminal Removal Tool | Service Terminal | Tray | Core Crimp | Insulation Crimp |
|---|---|---|---|---|---|---|---|
| I | Pending | Pending | Pending | Not Available | Not Available | Not Available | Not Available |

### *E12A Glow Plug 1 (LML)*

| Pin | Size | Color | Circuit | Function | Terminal Type ID | Option |
|---|---|---|---|---|---|---|
| A | 2 | VT | 1581 | Glow Plug Supply Voltage (1) | I | LML |

# GRAPHIC PENDING

## Connector Part Information

Harness Type: Engine

OEM Connector: 7009-1338-02

Service Connector: Pending

Description: 1-Way  Ring Terminal

## *Terminal Part Information*

| Terminal Type ID | Terminated Lead | Diagnostic Test Probe | Terminal Removal Tool | Service Terminal | Tray | Core Crimp | Insulation Crimp |
|---|---|---|---|---|---|---|---|
| I | Pending | Pending | Pending | Not Available | Not Available | Not Available | Not Available |

## *E12B Glow Plug 2 (LML)*

| Pin | Size | Color | Circuit | Function | Terminal Type ID | Option |
|---|---|---|---|---|---|---|
| A | 2 | VT/WH | 1582 | Glow Plug Supply Voltage (2) | I | LML |

# GRAPHIC PENDING

## Connector Part Information

Harness Type: Engine

OEM Connector: 7009-1338-02

Service Connector: Pending

Description: 1-Way  Ring Terminal

### *Terminal Part Information*

| Terminal Type ID | Terminated Lead | Diagnostic Test Probe | Terminal Removal Tool | Service Terminal | Tray | Core Crimp | Insulation Crimp |
|---|---|---|---|---|---|---|---|
| I | Pending | Pending | Pending | Not Available | Not Available | Not Available | Not Available |

### *E12C Glow Plug 3 (LML)*

| Pin | Size | Color | Circuit | Function | Terminal Type ID | Option |
|---|---|---|---|---|---|---|
| A | 2 | YE | 1583 | Glow Plug Supply Voltage (3) | I | LML |

# GRAPHIC PENDING

## Connector Part Information

Harness Type: Engine

OEM Connector: 7009-1338-02

Service Connector: Pending

Description: 1-Way  Ring Terminal

### *Terminal Part Information*

| Terminal Type ID | Terminated Lead | Diagnostic Test Probe | Terminal Removal Tool | Service Terminal | Tray | Core Crimp | Insulation Crimp |
|---|---|---|---|---|---|---|---|
| I | Pending | Pending | Pending | Not Available | Not Available | Not Available | Not Available |

### *E12D Glow Plug 4 (LML)*

| Pin | Size | Color | Circuit | Function | Terminal Type ID | Option |
|---|---|---|---|---|---|---|
| A | 2 | WH/YE | 1584 | Glow Plug Supply Voltage (4) | I | LML |

# GRAPHIC PENDING

## Connector Part Information

Harness Type: Engine

OEM Connector: 7009-1338-02

Service Connector: Pending

Description: 1-Way  Ring Terminal

### *Terminal Part Information*

| Terminal Type ID | Terminated Lead | Diagnostic Test Probe | Terminal Removal Tool | Service Terminal | Tray | Core Crimp | Insulation Crimp |
|---|---|---|---|---|---|---|---|
| I | Pending | Pending | Pending | Not Available | Not Available | Not Available | Not Available |

### *E12E Glow Plug 5 (LML)*

| Pin | Size | Color | Circuit | Function | Terminal Type ID | Option |
|---|---|---|---|---|---|---|
| A | 2 | GN | 1585 | Glow Plug Supply Voltage (5) | I | LML |

# GRAPHIC PENDING

## Connector Part Information

Harness Type: Engine

OEM Connector: 7009-1338-02

Service Connector: Pending

Description: 1-Way  Ring Terminal

### *Terminal Part Information*

| Terminal Type ID | Terminated Lead | Diagnostic Test Probe | Terminal Removal Tool | Service Terminal | Tray | Core Crimp | Insulation Crimp |
|---|---|---|---|---|---|---|---|
| I | Pending | Pending | Pending | Not Available | Not Available | Not Available | Not Available |

### *E12F Glow Plug 6 (LML)*

| Pin | Size | Color | Circuit | Function | Terminal Type ID | Option |
|---|---|---|---|---|---|---|
| A | 2 | GN/WH | 1586 | Glow Plug Supply Voltage (6) | I | LML |

# GRAPHIC PENDING

## Connector Part Information

Harness Type: Engine

OEM Connector: 7009-1338-02

Service Connector: Pending

Description: 1-Way  Ring Terminal

### *Terminal Part Information*

| Terminal Type ID | Terminated Lead | Diagnostic Test Probe | Terminal Removal Tool | Service Terminal | Tray | Core Crimp | Insulation Crimp |
|---|---|---|---|---|---|---|---|
| I | Pending | Pending | Pending | Not Available | Not Available | Not Available | Not Available |

### *E12G Glow Plug 7 (LML)*

| Pin | Size | Color | Circuit | Function | Terminal Type ID | Option |
|---|---|---|---|---|---|---|
| A | 2 | PK | 1587 | Glow Plug Supply Voltage (7) | I | LML |

# GRAPHIC PENDING

## Connector Part Information

Harness Type: Engine

OEM Connector: 7009-1338-02

Service Connector: Pending

Description: 1-Way  Ring Terminal

### *Terminal Part Information*

| Terminal Type ID | Terminated Lead | Diagnostic Test Probe | Terminal Removal Tool | Service Terminal | Tray | Core Crimp | Insulation Crimp |
|---|---|---|---|---|---|---|---|
| I | Pending | Pending | Pending | Not Available | Not Available | Not Available | Not Available |

### *E12H Glow Plug 8 (LML)*

| Pin | Size | Color | Circuit | Function | Terminal Type ID | Option |
|---|---|---|---|---|---|---|
| A | 2 | PK/WH | 1588 | Glow Plug Supply Voltage (8) | I | LML |

## E14B Seat Heating Element - Driver Cushion

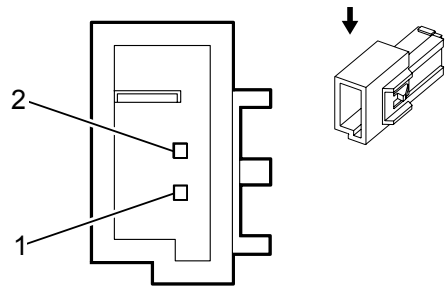


### Connector Part Information

Harness Type: Driver Seat Cushion

OEM Connector: AIT2WSB-02A-1AK

Service Connector: 19260825

Description: 2-Way M 0.64 Series (BK)

### *Terminal Part Information*

| Terminal Type ID | Terminated Lead | Diagnostic Test Probe | Terminal Removal Tool | Service Terminal | Tray | Core Crimp | Insulation Crimp |
|---|---|---|---|---|---|---|---|
| I | Not Available | Not Available | Not Available | Not Available | Not Available | Not Available | Not Available |

### *E14B Seat Heating Element - Driver Cushion*

| Pin | Size | Color | Circuit | Function | Terminal Type ID | Option |
|---|---|---|---|---|---|---|
| 1 | 0.75 | BN/VT | 2077 | Driver Heated Seat Element Supply Voltage | I | - |
| 2 | 0.75 | BK | 1150 | Ground | I | - |

## E14D Seat Heating Element - Passenger Cushion

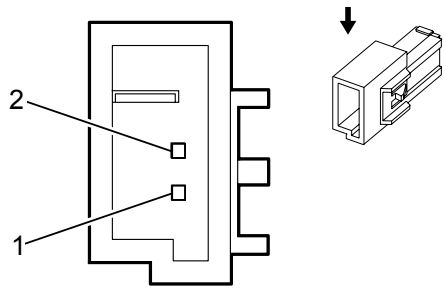


### Connector Part Information

Harness Type: Passenger Seat Cushion

OEM Connector: AIT2WSB-02A-1AK

Service Connector: 19260825

Description: 2-Way M 0.64 Series (BK)

### *Terminal Part Information*

| Terminal Type ID | Terminated Lead | Diagnostic Test Probe | Terminal Removal Tool | Service Terminal | Tray | Core Crimp | Insulation Crimp |
|---|---|---|---|---|---|---|---|
| I | Not Available | Not Available | Not Available | Not Available | Not Available | Not Available | Not Available |

### *E14D Seat Heating Element - Passenger Cushion*

| Pin | Size | Color | Circuit | Function | Terminal Type ID | Option |
|---|---|---|---|---|---|---|
| 1 | 0.75 | BN/L-BU | 2479 | Passenger Heated Seat Element Supply Voltage | I | - |
| 2 | 0.75 | BK | 1250 | Ground | I | - |

## E17D Outside Rearview Mirror Glass - Driver X1

### Connector Part Information

Harness Type:

OEM Connector: MTF0F462

Service Connector: Service by Harness – See Part Catalog

Description: 1 F  (NA)

### *Terminal Part Information*

| Terminal Type ID | Terminated Lead | Diagnostic Test Probe | Terminal Removal Tool | Service Terminal | Tray | Core Crimp | Insulation Crimp |
|---|---|---|---|---|---|---|---|
| I | Not Available | Not Available | Not Available | Not Available | Not Available | Not Available | Not Available |

### *E17D Outside Rearview Mirror Glass - Driver X1*

| Pin | Size | Color | Circuit | Function | Terminal Type ID | Option |
|---|---|---|---|---|---|---|
| 1 | 0.35 | BK | 2267 | Mirror Heating Element Supply Voltage | I | - |

## E17D Outside Rearview Mirror Glass - Driver X2

### Connector Part Information

Harness Type:

OEM Connector: MTF0F462

Service Connector: Service by Harness – See Part Catalog

Description: 1 F  (NA)

### *Terminal Part Information*

| Terminal Type ID | Terminated Lead | Diagnostic Test Probe | Terminal Removal Tool | Service Terminal | Tray | Core Crimp | Insulation Crimp |
|---|---|---|---|---|---|---|---|
| I | Not Available | Not Available | Not Available | Not Available | Not Available | Not Available | Not Available |

### *E17D Outside Rearview Mirror Glass - Driver X2*

| Pin | Size | Color | Circuit | Function | Terminal Type ID | Option |
|---|---|---|---|---|---|---|
| 1 | 0.35 | BK | 1150 | Ground | I | - |

## E17D Outside Rearview Mirror Glass - Driver X3

### Connector Part Information

Harness Type:

OEM Connector: 03-06-1044

Service Connector: Service by Harness – See Part Catalog

Description: 4 F  (BK)

### *Terminal Part Information*

| Terminal Type ID | Terminated Lead | Diagnostic Test Probe | Terminal Removal Tool | Service Terminal | Tray | Core Crimp | Insulation Crimp |
|---|---|---|---|---|---|---|---|
| I | Not Available | Not Available | Not Available | Not Available | Not Available | Not Available | Not Available |

### *E17D Outside Rearview Mirror Glass - Driver X3*

| Pin | Size | Color | Circuit | Function | Terminal Type ID | Option |
|---|---|---|---|---|---|---|
| 1 | 0.35 | RD/BU | 1314 | Left Front Turn Signal Lamp Supply Voltage | I | - |
| 2 | 0.35 | BK/WH | 1150 | Ground | I | - |
| 3 | 0.35 | PK | 1691 | Automatic Day/Night Mirror Low Reference | I | - |
| 4 | 0.35 | GN/BK | 1690 | Automatic Day/Night Mirror Signal | I | - |

## E17P Outside Rearview Mirror Glass - Passenger X1

### Connector Part Information

Harness Type:

OEM Connector: MTF0F462

Service Connector: Service by Harness – See Part Catalog

Description: 1 F  (NA)

### *Terminal Part Information*

| Terminal Type ID | Terminated Lead | Diagnostic Test Probe | Terminal Removal Tool | Service Terminal | Tray | Core Crimp | Insulation Crimp |
|---|---|---|---|---|---|---|---|
| I | Not Available | Not Available | Not Available | Not Available | Not Available | Not Available | Not Available |

### *E17P Outside Rearview Mirror Glass - Passenger X1*

| Pin | Size | Color | Circuit | Function | Terminal Type ID | Option |
|---|---|---|---|---|---|---|
| 1 | 0.35 | BK | 2267 | Mirror Heating Element Supply Voltage | I | - |

## E17P Outside Rearview Mirror Glass - Passenger X2

### Connector Part Information

Harness Type:

OEM Connector: MTF0F462

Service Connector: Service by Harness – See Part Catalog

Description: 1 F  (NA)

### *Terminal Part Information*

| Terminal Type ID | Terminated Lead | Diagnostic Test Probe | Terminal Removal Tool | Service Terminal | Tray | Core Crimp | Insulation Crimp |
|---|---|---|---|---|---|---|---|
| I | Not Available | Not Available | Not Available | Not Available | Not Available | Not Available | Not Available |

### *E17P Outside Rearview Mirror Glass - Passenger X2*

| Pin | Size | Color | Circuit | Function | Terminal Type ID | Option |
|---|---|---|---|---|---|---|
| 1 | 0.35 | BK | 1250 | Ground | I | - |

# E17P Outside Rearview Mirror Glass - Passenger X3

## Connector Part Information

Harness Type:

OEM Connector: 03-06-1044

Service Connector: Service by Harness – See Part Catalog

Description: 4 F  (BK)

## *Terminal Part Information*

| Terminal Type ID | Terminated Lead | Diagnostic Test Probe | Terminal Removal Tool | Service Terminal | Tray | Core Crimp | Insulation Crimp |
|---|---|---|---|---|---|---|---|
| I | Not Available | Not Available | Not Available | Not Available | Not Available | Not Available | Not Available |

## *E17P Outside Rearview Mirror Glass - Passenger X3*

| Pin | Size | Color | Circuit | Function | Terminal Type ID | Option |
|---|---|---|---|---|---|---|
| 1 | 0.35 | RD/BU | 1315 | Right Front Turn Signal Lamp Supply Voltage | I | - |
| 2 | 0.35 | BK/WH | 1250 | Ground | I | - |
| 3-4 | - | - | - | Not Occupied | - | - |

## E18 Rear Defogger Grid

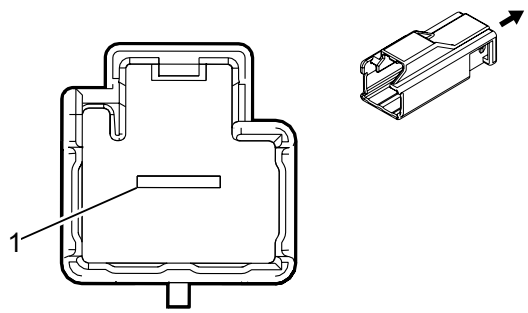


### Connector Part Information

Harness Type: Body

OEM Connector: 13953570

Service Connector: Pending

Description: 1-Way M 6.3 Series (BK)

### *Terminal Part Information*

| Terminal Type ID | Terminated Lead | Diagnostic Test Probe | Terminal Removal Tool | Service Terminal | Tray | Core Crimp | Insulation Crimp |
|---|---|---|---|---|---|---|---|
| I | Pending | Pending | Pending | Not Available | Not Available | Not Available | Not Available |

### *E18 Rear Defogger Grid*

| Pin | Size | Color | Circuit | Function | Terminal Type ID | Option |
|---|---|---|---|---|---|---|
| 1 | 2.5 | BN/VT | 293 | Rear Defog Element Supply Voltage | I | - |

## E24 Intake Air Heater (LML)

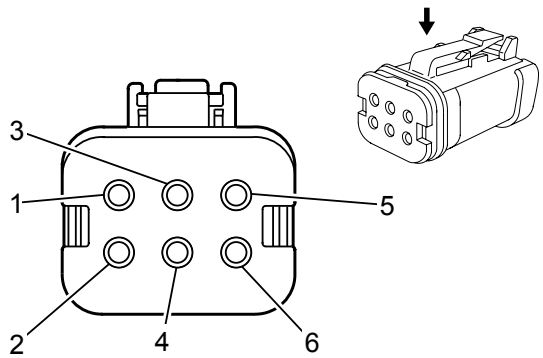


### Connector Part Information

Harness Type: Engine

OEM Connector: DT16-6S-KP01

Service Connector: 13576409

Description: 6-Way F 2.8 Series, Sealed (GN)

### *Terminal Part Information*

| Terminal Type ID | Terminated Lead | Diagnostic Test Probe | Terminal Removal Tool | Service Terminal | Tray | Core Crimp | Insulation Crimp |
|---|---|---|---|---|---|---|---|
| I | Pending | Pending | Pending | Not Available | Not Available | Not Available | Not Available |

### *E24 Intake Air Heater (LML)*

| Pin | Size | Color | Circuit | Function | Terminal Type ID | Option |
|---|---|---|---|---|---|---|
| 1 | 0 | BK | 2923 | Intake Air Heater Temperature Signal | I | LML |
| 2 | 0 | OG/BK | 2921 | Intake Air Heater Switch On/Off Signal | I | LML |
| 3 | 0 | YE | 2920 | Intake Air Heater Heart Beat Signal | I | LML |
| 4 | 0 | D-GN | 2924 | Intake Air Heater Current Feedback Signal | I | LML |
| 5 | 0 | | 2925 | Intake Air Heater Voltage Feedback Signal | I | LML |
| 6 | 0 | VT | 2922 | Intake Air Heater Digital Response Signal | I | LML |

## E28 Center Console Compartment Lamp

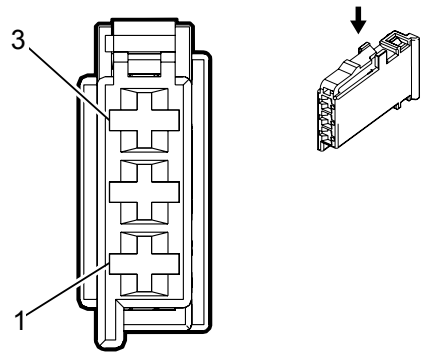


### Connector Part Information

Harness Type: Floor Console

OEM Connector: 10865339

Service Connector: 93186706

Description: 3-Way F 1.6 Micro Timer Series, Sealed (BK)

### *Terminal Part Information*

| Terminal Type ID | Terminated Lead | Diagnostic Test Probe | Terminal Removal Tool | Service Terminal | Tray | Core Crimp | Insulation Crimp |
|---|---|---|---|---|---|---|---|
| I | Pending | J-35616-14 (GN) | J-38125-560 | 962943-5 | 16 | E | A |

### *E28 Center Console Compartment Lamp*

| Pin | Size | Color | Circuit | Function | Terminal Type ID | Option |
|---|---|---|---|---|---|---|
| 1 | 0.5 | WH/BN | 6815 | Inadvertent Power Control | I | - |
| 2 | 0.5 | BK | 1050 | Ground | I | - |
| 3 | - | - | - | Not Occupied | - | - |

## E29LF Fog Lamp - Left Front

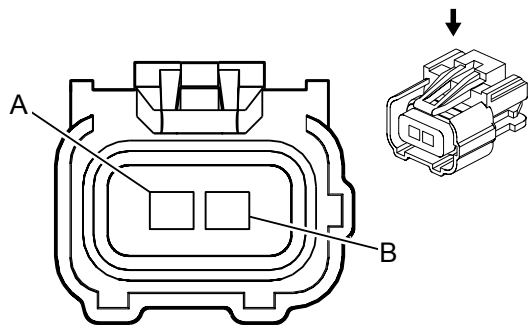


### Connector Part Information

Harness Type: Front Bumper

OEM Connector: 15489797

Service Connector: 19168034

Description: 2-Way F 150 Series (BK)

### *Terminal Part Information*

| Terminal Type ID | Terminated Lead | Diagnostic Test Probe | Terminal Removal Tool | Service Terminal | Tray | Core Crimp | Insulation Crimp |
|---|---|---|---|---|---|---|---|
| I | Pending | J-35616-2A (GY) | J-38125-29 | 15496531 | 8 | E | A |

### *E29LF Fog Lamp - Left Front*

| Pin | Size | Color | Circuit | Function | Terminal Type ID | Option |
|---|---|---|---|---|---|---|
| A | 0.5 | BN/VT | 2234 | Front Fog Lamp Supply Voltage | I | - |
| B | 0.5 | BK | 150 | Ground | I | - |

## E29RF Fog Lamp - Right Front

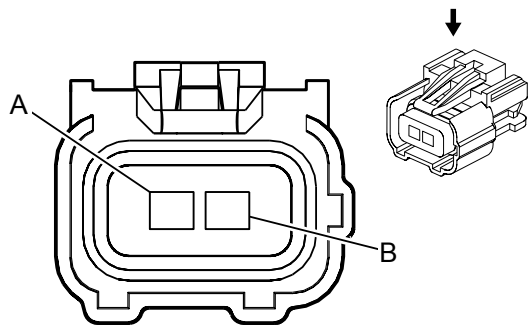


### Connector Part Information

Harness Type: Front Bumper

OEM Connector: 15489797

Service Connector: 19168034

Description: 2-Way F 150 Series (BK)

### *Terminal Part Information*

| Terminal Type ID | Terminated Lead | Diagnostic Test Probe | Terminal Removal Tool | Service Terminal | Tray | Core Crimp | Insulation Crimp |
|---|---|---|---|---|---|---|---|
| I | Pending | J-35616-2A (GY) | J-38125-29 | 15496531 | 8 | E | A |

### *E29RF Fog Lamp - Right Front*

| Pin | Size | Color | Circuit | Function | Terminal Type ID | Option |
|---|---|---|---|---|---|---|
| A | 0.5 | BN/VT | 2234 | Front Fog Lamp Supply Voltage | I | - |
| B | 0.5 | BK | 250 | Ground | I | - |

## E31L Sunshade Mirror Lamp - Left

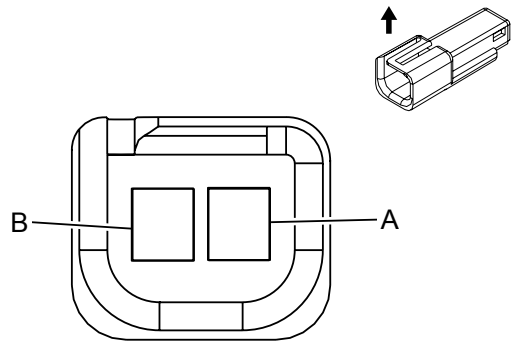


### Connector Part Information

Harness Type: Headliner

OEM Connector: 12047663

Service Connector: 13584278

Description: 2-Way M 150 Metri Pack Series (BK)

### *Terminal Part Information*

| Terminal Type ID | Terminated Lead | Diagnostic Test Probe | Terminal Removal Tool | Service Terminal | Tray | Core Crimp | Insulation Crimp |
|---|---|---|---|---|---|---|---|
| I | Not Available | J-35616-3 (GY) | J-38125-12A | 12047581 | 2 | E | C |

### *E31L Sunshade Mirror Lamp - Left*

| Pin | Size | Color | Circuit | Function | Terminal Type ID | Option |
|---|---|---|---|---|---|---|
| A | 0.5 | WH/BN | 6815 | Inadvertent Power Control | I | - |
| B | 0.5 | BK | 1050 | Ground | I | - |

## E31R Sunshade Mirror Lamp - Right

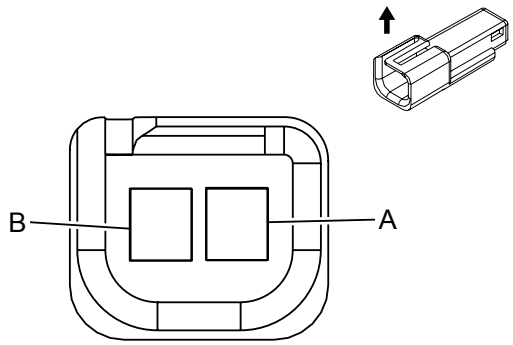


### Connector Part Information

Harness Type: Headliner

OEM Connector: 12047663

Service Connector: 13584278

Description: 2-Way M 150 Metri Pack Series (BK)

### *Terminal Part Information*

| Terminal Type ID | Terminated Lead | Diagnostic Test Probe | Terminal Removal Tool | Service Terminal | Tray | Core Crimp | Insulation Crimp |
|---|---|---|---|---|---|---|---|
| I | Not Available | J-35616-3 (GY) | J-38125-12A | 12047581 | 2 | E | C |

### *E31R Sunshade Mirror Lamp - Right*

| Pin | Size | Color | Circuit | Function | Terminal Type ID | Option |
|---|---|---|---|---|---|---|
| A | 0.5 | WH/BN | 6815 | Inadvertent Power Control | I | - |
| B | 0.5 | BK | 1050 | Ground | I | - |

## E33L Cargo Lamp - Left

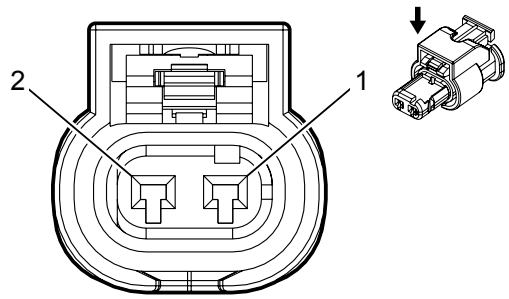


### Connector Part Information

Harness Type:

OEM Connector: 13580179

Service Connector: 13587957

Description: 2 F 1.2 MCP Series, Sealed (BK)

### *Terminal Part Information*

| Terminal Type ID | Terminated Lead | Diagnostic Test Probe | Terminal Removal Tool | Service Terminal | Tray | Core Crimp | Insulation Crimp |
|---|---|---|---|---|---|---|---|
| I | Not Available | Not Available | Not Available | Not Available | Not Available | Not Available | Not Available |

### *E33L Cargo Lamp - Left*

| Pin | Size | Color | Circuit | Function | Terminal Type ID | Option |
|---|---|---|---|---|---|---|
| 1 | 0.5 | RD | 1430 | Exterior Courtesy Lamp Supply Voltage | I | - |
| 2 | 0.5 | BK | 1750 | Ground | I | - |

## E33R Cargo Lamp - Right

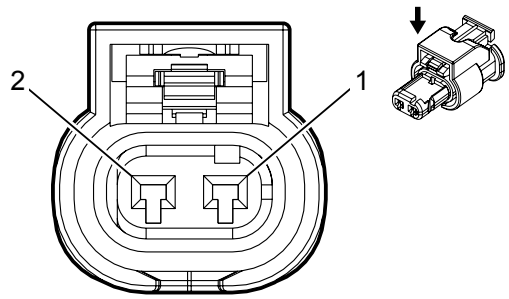


### Connector Part Information

Harness Type:

OEM Connector: 13580179

Service Connector: 13587957

Description: 2 F 1.2 MCP Series, Sealed (BK)

### *Terminal Part Information*

| Terminal Type ID | Terminated Lead | Diagnostic Test Probe | Terminal Removal Tool | Service Terminal | Tray | Core Crimp | Insulation Crimp |
|---|---|---|---|---|---|---|---|
| I | Not Available | Not Available | Not Available | Not Available | Not Available | Not Available | Not Available |

### *E33R Cargo Lamp - Right*

| Pin | Size | Color | Circuit | Function | Terminal Type ID | Option |
|---|---|---|---|---|---|---|
| 1 | 0.5 | RD | 1430 | Exterior Courtesy Lamp Supply Voltage | I | - |
| 2 | 0.5 | BK | 1750 | Ground | I | - |

## E37B Dome/Reading Lamps - 2nd Row

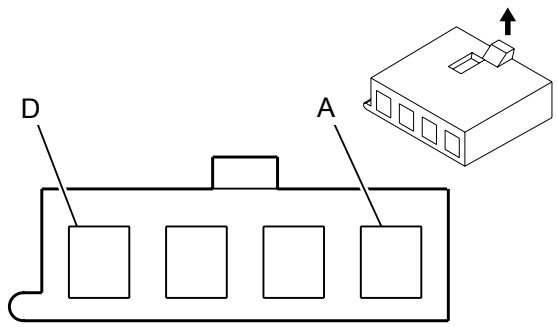


### Connector Part Information

Harness Type: Headliner

OEM Connector: 12092162

Service Connector: 15306021

Description: 4-Way F 150 Metri Pack Series (BK)

### *Terminal Part Information*

| Terminal Type ID | Terminated Lead | Diagnostic Test Probe | Terminal Removal Tool | Service Terminal | Tray | Core Crimp | Insulation Crimp |
|---|---|---|---|---|---|---|---|
| I | Not Available | J-35616-14 (GN) | J-38125-12A | 15326030 | 2 | E | C |

### *E37B Dome/Reading Lamps - 2nd Row*

| Pin | Size | Color | Circuit | Function | Terminal Type ID | Option |
|---|---|---|---|---|---|---|
| A | 0.5 | WH/BN | 6815 | Inadvertent Power Control | I | - |
| B | 0.5 | BK | 1050 | Ground | I | - |
| C | 0.5 | GY | 157 | Interior Lamp Control | I | - |
| D | 0.5 | YE | 6817 | LED Backlight Dimming Control | I | - |

## E37EL Dome/Reading Lamps - Front Overhead Console Left

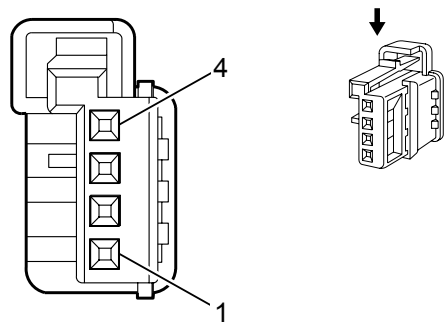


### Connector Part Information

Harness Type: Overhead Console

OEM Connector: 10812166

Service Connector: 19119349

Description: 4-Way F 0.64 Micro Quadlock Series (GY)

### *Terminal Part Information*

| Terminal Type ID | Terminated Lead | Diagnostic Test Probe | Terminal Removal Tool | Service Terminal | Tray | Core Crimp | Insulation Crimp |
|---|---|---|---|---|---|---|---|
| I | 13575390 | J-35616-64B (L-BU) | J-38125-12A | 928999-5 | 15 | H | H |
| II | 13575390 | J-35616-64B (L-BU) | J-38125-12A | 928999-5 | 15 | J | J |

### *E37EL Dome/Reading Lamps - Front Overhead Console Left*

| Pin | Size | Color | Circuit | Function | Terminal Type ID | Option |
|---|---|---|---|---|---|---|
| 1 | 0.35 | YE | 6817 | LED Backlight Dimming Control | I | - |
| 2 | 0.5 | WH/BN | 6815 | Inadvertent Power Control | II | - |
| 3 | 0.5 | GY | 157 | Interior Lamp Control | II | - |
| 4 | 0.5 | BK | 1050 | Ground | II | - |

## E37ER Dome/Reading Lamps - Front Overhead Console Right

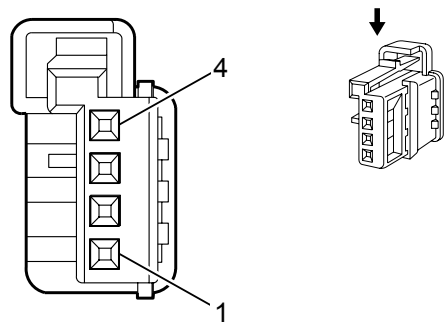


### Connector Part Information

Harness Type: Overhead Console

OEM Connector: 10812166

Service Connector: 19119349

Description: 4-Way F 0.64 Micro Quadlock Series (GY)

### *Terminal Part Information*

| Terminal Type ID | Terminated Lead | Diagnostic Test Probe | Terminal Removal Tool | Service Terminal | Tray | Core Crimp | Insulation Crimp |
|---|---|---|---|---|---|---|---|
| I | 13575390 | J-35616-64B (L-BU) | J-38125-12A | 928999-5 | 15 | H | H |
| II | 13575390 | J-35616-64B (L-BU) | J-38125-12A | 928999-5 | 15 | J | J |

### *E37ER Dome/Reading Lamps - Front Overhead Console Right*

| Pin | Size | Color | Circuit | Function | Terminal Type ID | Option |
|---|---|---|---|---|---|---|
| 1 | 0.35 | YE | 6817 | LED Backlight Dimming Control | I | - |
| 2 | 0.5 | WH/BN | 6815 | Inadvertent Power Control | II | - |
| 3 | 0.5 | GY | 157 | Interior Lamp Control | II | - |
| 4 | 0.5 | BK | 1050 | Ground | II | - |

## F101 Passenger Instrument Panel Air Bag

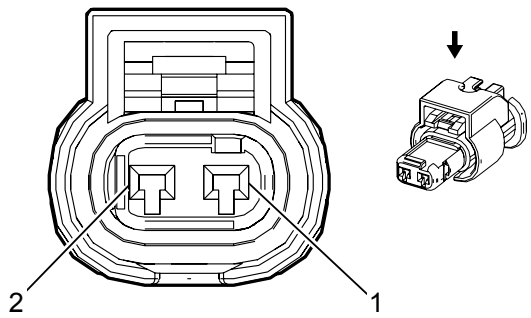


### Connector Part Information

Harness Type: Passenger Air Bag Jumper

OEM Connector: 13863037

Service Connector: 13587886

Description: 2-Way F 1.2 MCP Series, Sealed (YE with BK Inner Connector)

### *Terminal Part Information*

| Terminal Type ID | Terminated Lead | Diagnostic Test Probe | Terminal Removal Tool | Service Terminal | Tray | Core Crimp | Insulation Crimp |
|---|---|---|---|---|---|---|---|
| I | Pending | J-35616-16 (L-GN) | J-38125-22 | Not Available | Not Available | Not Available | Not Available |

### *F101 Passenger Instrument Panel Air Bag*

| Pin | Size | Color | Circuit | Function | Terminal Type ID | Option |
|---|---|---|---|---|---|---|
| 1 | 0.35 | YE/OG | 3025 | Passenger IP Module Stage 1 High Control | I | - |
| 2 | 0.35 | OG/WH | 3024 | Passenger IP Module Stage 1 Low Control | I | - |

## F112D Seat Belt Retractor Pretensioner - Driver

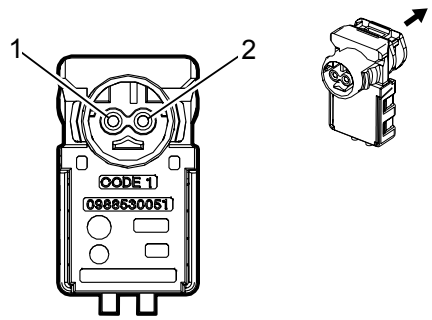


### Connector Part Information

Harness Type: Body

OEM Connector: 13973027

Service Connector: Pending

Description: 2-Way F AK 2 Series (BK with YE cover)

### *Terminal Part Information*

| Terminal Type ID | Terminated Lead | Diagnostic Test Probe | Terminal Removal Tool | Service Terminal | Tray | Core Crimp | Insulation Crimp |
|---|---|---|---|---|---|---|---|
| I | Pending | Pending | Pending | Not Available | Not Available | Not Available | Not Available |

### *F112D Seat Belt Retractor Pretensioner - Driver*

| Pin | Size | Color | Circuit | Function | Terminal Type ID | Option |
|---|---|---|---|---|---|---|
| 1 | 0.5 | RD | 3477 | Driver Seat Belt Retractor Pretensioner High Control | I | - |
| 2 | 0.5 | GY | 3478 | Driver Seat Belt Retractor Pretensioner Low Control | I | - |

## F112P Seat Belt Retractor Pretensioner - Passenger

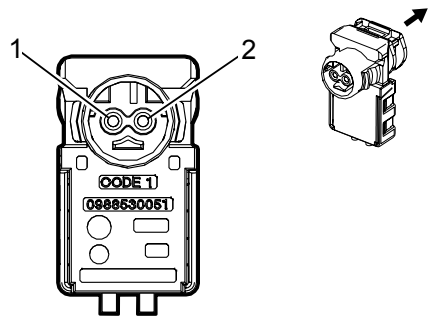


### Connector Part Information

Harness Type: Body

OEM Connector: 13973026

Service Connector: Pending

Description: 2-Way F AK 2 Series

### *Terminal Part Information*

| Terminal Type ID | Terminated Lead | Diagnostic Test Probe | Terminal Removal Tool | Service Terminal | Tray | Core Crimp | Insulation Crimp |
|---|---|---|---|---|---|---|---|
| I | Pending | Pending | Pending | Not Available | Not Available | Not Available | Not Available |

### *F112P Seat Belt Retractor Pretensioner - Passenger*

| Pin | Size | Color | Circuit | Function | Terminal Type ID | Option |
|---|---|---|---|---|---|---|
| 1 | 0.5 | L-GN | 3475 | Passenger Seat Belt Retractor Pretensioner High Control | I | - |
| 2 | 0.5 | WH | 3476 | Passenger Seat Belt Retractor Pretensioner Low Control | I | - |

## F113D Seat Belt Anchor Pretensioner - Driver

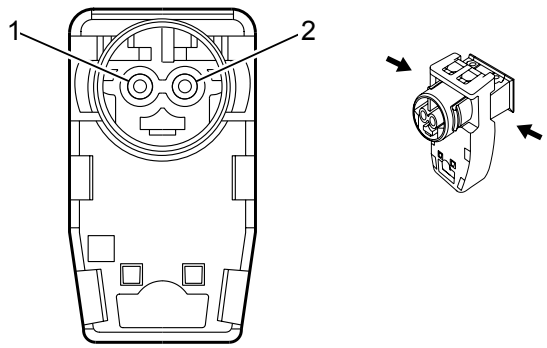


### Connector Part Information

Harness Type: Driver Seat Cushion

OEM Connector: PPI0001721

Service Connector: 19180245

Description: 2-Way F 0.64 Series, Sealed (BK with YE cover)

### *Terminal Part Information*

| Terminal Type ID | Terminated Lead | Diagnostic Test Probe | Terminal Removal Tool | Service Terminal | Tray | Core Crimp | Insulation Crimp |
|---|---|---|---|---|---|---|---|
| I | Not Available | Not Available | Not Available | Not Available | Not Available | Not Available | Not Available |

### *F113D Seat Belt Anchor Pretensioner - Driver*

| Pin | Size | Color | Circuit | Function | Terminal Type ID | Option |
|---|---|---|---|---|---|---|
| 1 | 0.5 | OG/YE | 3481 | Driver Seat Belt Anchor Pretensioner High Control | I | - |
| 2 | 0.5 | YE/OG | 3482 | Driver Seat Belt Anchor Pretensioner Low Control | I | - |

## F113P Seat Belt Anchor Pretensioner - Passenger

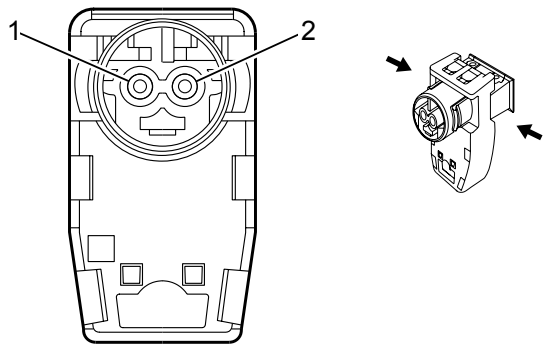


### Connector Part Information

Harness Type: Passenger Seat Cushion

OEM Connector: PPI0001721

Service Connector: 19180245

Description: 2-Way F 0.64 Series, Sealed (BK with YE cover)

### *Terminal Part Information*

| Terminal Type ID | Terminated Lead | Diagnostic Test Probe | Terminal Removal Tool | Service Terminal | Tray | Core Crimp | Insulation Crimp |
|---|---|---|---|---|---|---|---|
| I | Not Available | Not Available | Not Available | Not Available | Not Available | Not Available | Not Available |

### *F113P Seat Belt Anchor Pretensioner - Passenger*

| Pin | Size | Color | Circuit | Function | Terminal Type ID | Option |
|---|---|---|---|---|---|---|
| 1 | 0.5 | OG/BN | 3479 | Passenger Seat Belt Anchor Pretensioner High Control | I | - |
| 2 | 0.5 | GY/OG | 3480 | Passenger Seat Belt Anchor Pretensioner Low Control | I | - |

## G10L Cooling Fan Motor - Left

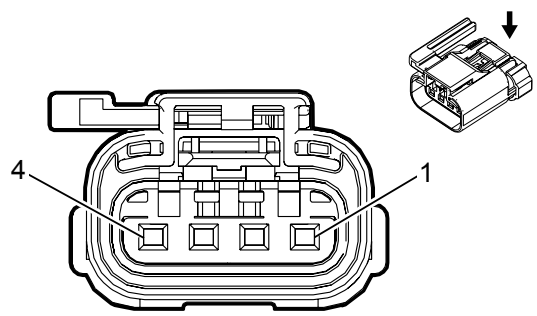


### Connector Part Information

Harness Type: Forward Lamp

OEM Connector: 13949247

Service Connector: 19301718

Description: 4-Way F 2.8 APEX Series, Sealed (BK)

### *Terminal Part Information*

| Terminal Type ID | Terminated Lead | Diagnostic Test Probe | Terminal Removal Tool | Service Terminal | Tray | Core Crimp | Insulation Crimp |
|---|---|---|---|---|---|---|---|
| I | Not Available | Not Available | Not Available | Not Available | Not Available | Not Available | Not Available |
| II | Not Available | J-35616-35 (VT) | J-38125-12A | 54001800 | 22 | 2 | 4 |

### *G10L Cooling Fan Motor - Left*

| Pin | Size | Color | Circuit | Function | Terminal Type ID | Option |
|---|---|---|---|---|---|---|
| 1 | 4 | BK | 150 | Ground | I | - |
| 2 | 4 | RD/WH | 342 | Battery Positive Voltage | I | - |
| 3 | - | - | - | Not Occupied | - | - |
| 4 | 0.5 | BN/YE | 473 | High Speed Cooling Fan Relay Control | II | - |

## G10R Cooling Fan Motor - Right

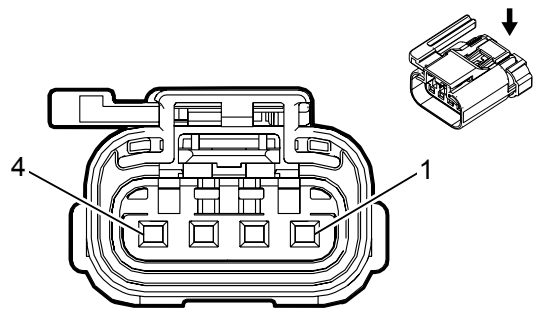


### Connector Part Information

Harness Type: Forward Lamp

OEM Connector: 13949247

Service Connector: 19301718

Description: 4-Way F 2.8 APEX Series, Sealed (BK)

### *Terminal Part Information*

| Terminal Type ID | Terminated Lead | Diagnostic Test Probe | Terminal Removal Tool | Service Terminal | Tray | Core Crimp | Insulation Crimp |
|---|---|---|---|---|---|---|---|
| I | Not Available | Not Available | Not Available | Not Available | Not Available | Not Available | Not Available |
| II | Not Available | J-35616-35 (VT) | J-38125-12A | 54001800 | 22 | 2 | 4 |

### *G10R Cooling Fan Motor - Right*

| Pin | Size | Color | Circuit | Function | Terminal Type ID | Option |
|---|---|---|---|---|---|---|
| 1 | 4 | BK | 250 | Ground | I | - |
| 2 | 4 | RD/GY | 642 | Battery Positive Voltage | I | - |
| 3 | - | - | - | Not Occupied | - | - |
| 4 | 0.5 | BN/YE | 473 | High Speed Cooling Fan Relay Control | II | - |

## G12 Fuel Pump

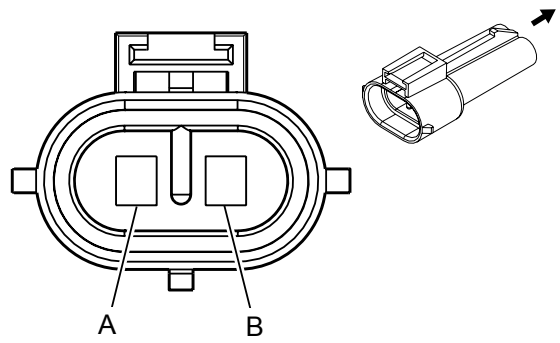


### Connector Part Information

Harness Type: Chassis

OEM Connector: 12059450

Service Connector: 13580868

Description: 2-Way M 280 Metri Pack Series, Sealed (BK)

### *Terminal Part Information*

| Terminal Type ID | Terminated Lead | Diagnostic Test Probe | Terminal Removal Tool | Service Terminal | Tray | Core Crimp | Insulation Crimp |
|---|---|---|---|---|---|---|---|
| I | Pending | J-35616-5 (PU) | J-38125-11A | 12129497 | 1 | 2 | 5 |
| II | Pending | J-35616-5 (PU) | J-38125-11A | 12129497 | 1 | F | 5 |

### *G12 Fuel Pump*

| Pin | Size | Color | Circuit | Function | Terminal Type ID | Option |
|---|---|---|---|---|---|---|
| A | 1.5 | GY | 120 | Fuel Pump Supply Voltage | I | - |
| B | 3 | BK | 2150 | Ground | II | - |

## G13E Generator - Auxiliary

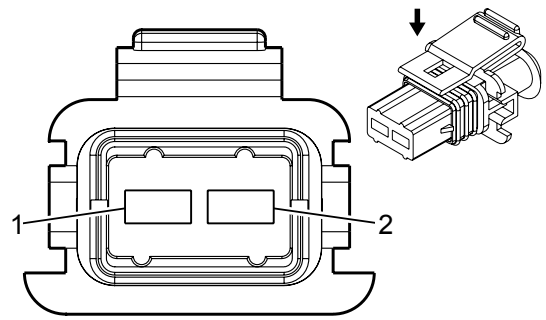


### Connector Part Information

Harness Type: Engine

OEM Connector: 12186308

Service Connector: 13585849

Description: 2-Way F Junior Power Timer Series, Sealed (BK)

### *Terminal Part Information*

| Terminal Type ID | Terminated Lead | Diagnostic Test Probe | Terminal Removal Tool | Service Terminal | Tray | Core Crimp | Insulation Crimp |
|---|---|---|---|---|---|---|---|
| I | 13575415 | J-35616-35 (VT) | J-38125-36 | 4-964286-1 | 16 | E | 1 |

### *G13E Generator - Auxiliary*

| Pin | Size | Color | Circuit | Function | Terminal Type ID | Option |
|---|---|---|---|---|---|---|
| 1 | 0.75 | BN | 25 | Charge Indicator Control | I | - |
| 2 | - | - | - | Not Occupied | - | - |

## G13E Generator - Auxiliary X1

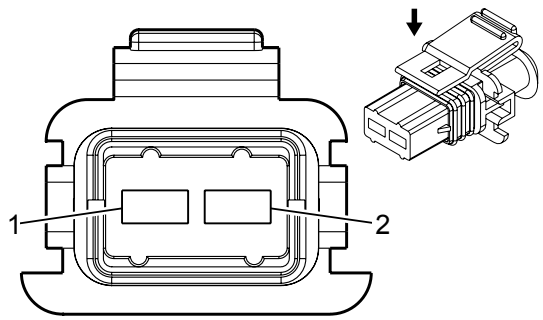


### Connector Part Information

Harness Type: Engine

OEM Connector: 12186308

Service Connector: 13585849

Description: 2-Way F Junior Power Timer Series, Sealed (BK)

### *Terminal Part Information*

| Terminal Type ID | Terminated Lead | Diagnostic Test Probe | Terminal Removal Tool | Service Terminal | Tray | Core Crimp | Insulation Crimp |
|---|---|---|---|---|---|---|---|
| I | 13575415 | J-35616-35 (VT) | J-38125-36 | 4-964286-1 | 16 | E | 1 |

### *G13E Generator - Auxiliary X1*

| Pin | Size | Color | Circuit | Function | Terminal Type ID | Option |
|---|---|---|---|---|---|---|
| 1 | 0.75 | BN | 25 | Charge Indicator Control | I | - |
| 2 | - | - | - | Not Occupied | - | - |

## G13 Generator

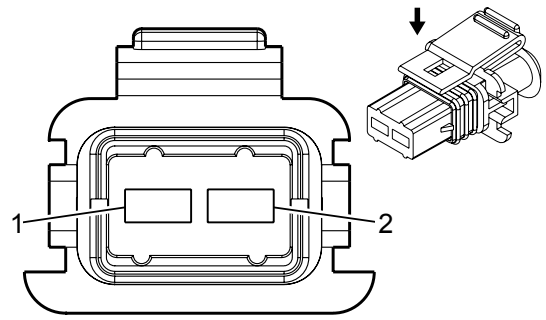


### Connector Part Information

Harness Type: Engine

OEM Connector: 12186308

Service Connector: 13585849

Description: 2-Way F Junior Power Timer Series, Sealed (BK)

### *Terminal Part Information*

| Terminal Type ID | Terminated Lead | Diagnostic Test Probe | Terminal Removal Tool | Service Terminal | Tray | Core Crimp | Insulation Crimp |
|---|---|---|---|---|---|---|---|
| I | Not Available | J-35616-35 (VT) | J-38125-36 | 4-964286-1 | 16 | E | 1 |
| II | 13575415 | J-35616-35 (VT) | J-38125-36 | 4-964286-1 | 16 | E | 1 |
| III | 13575389 | J-35616-35 (VT) | J-38125-36 | 4-964286-1 | 16 | E | 1 |

### *G13 Generator*

| Pin | Size | Color | Circuit | Function | Terminal Type ID | Option |
|---|---|---|---|---|---|---|
| 1 | 0.5<br>0.75 | BN<br>BN | 25<br>25 | Charge Indicator Control<br>Charge Indicator Control | I | - |
| 2 | 0.5<br>0.75 | GY<br>GY | 23<br>23 | Generator Field Duty Cycle Signal<br>Generator Field Duty Cycle Signal | I | - |

## G13 Generator X2

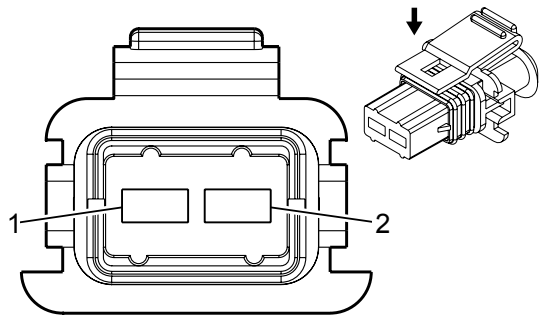


### Connector Part Information

Harness Type: Engine

OEM Connector: 12186308

Service Connector: 13585849

Description: 2-Way F Junior Power Timer Series, Sealed (BK)

### *Terminal Part Information*

| Terminal Type ID | Terminated Lead | Diagnostic Test Probe | Terminal Removal Tool | Service Terminal | Tray | Core Crimp | Insulation Crimp |
|---|---|---|---|---|---|---|---|
| I | 13575389 | J-35616-35 (VT) | J-38125-36 | 4-964286-1 | 16 | E | 1 |
| II | 13575415 | J-35616-35 (VT) | J-38125-36 | 4-964286-1 | 16 | E | 1 |

### *G13 Generator X2*

| Pin | Size | Color | Circuit | Function | Terminal Type ID | Option |
|---|---|---|---|---|---|---|
| 1 | 0.5<br>0.75 | BN<br>BN | 25<br>25 | Charge Indicator Control<br>Charge Indicator Control | I | - |
| 2 | 0.5<br>0.75 | GY<br>GY | 23<br>23 | Generator Field Duty Cycle Signal<br>Generator Field Duty Cycle Signal | I | - |

## G18 High Pressure Fuel Pump

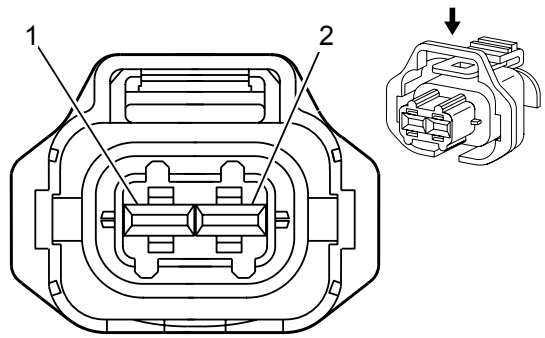


### Connector Part Information

Harness Type:

OEM Connector: 1928403874

Service Connector: 88988963

Description: 2 F Kompakt 2.8 Series, Sealed (BK)

### *Terminal Part Information*

| Terminal Type ID | Terminated Lead | Diagnostic Test Probe | Terminal Removal Tool | Service Terminal | Tray | Core Crimp | Insulation Crimp |
|---|---|---|---|---|---|---|---|
| I | Not Available | Not Available | Not Available | Not Available | Not Available | Not Available | Not Available |

### *G18 High Pressure Fuel Pump*

| Pin | Size | Color | Circuit | Function | Terminal Type ID | Option |
|---|---|---|---|---|---|---|
| 1 | 0.5 | YE | 7301 | High Pressure Fuel Pump Actuator High - Control | I | - |
| 2 | 0.5 | VT/BK | 7300 | High Pressure Fuel Pump Actuator Low - Control | I | - |

## G24 Windshield Washer Pump

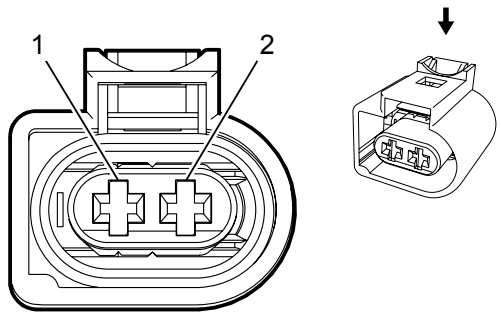


### Connector Part Information

Harness Type: Forward Lamp

OEM Connector: 10863916

Service Connector: 13576532

Description: 2-Way F 2.8 MDK5 Series, Sealed (BK)

### *Terminal Part Information*

| Terminal Type ID | Terminated Lead | Diagnostic Test Probe | Terminal Removal Tool | Service Terminal | Tray | Core Crimp | Insulation Crimp |
|---|---|---|---|---|---|---|---|
| I | Pending | J-35616-35 (VT) | J-38125-557 | 1-968857-3 | 7 | Not Available | Not Available |

### *G24 Windshield Washer Pump*

| Pin | Size | Color | Circuit | Function | Terminal Type ID | Option |
|---|---|---|---|---|---|---|
| 1 | 0.75 | GY/VT | 228 | Windshield Washer Pump Control | I | - |
| 2 | 0.75 | BK | 150 | Ground | I | - |

## K9 Body Control Module X1

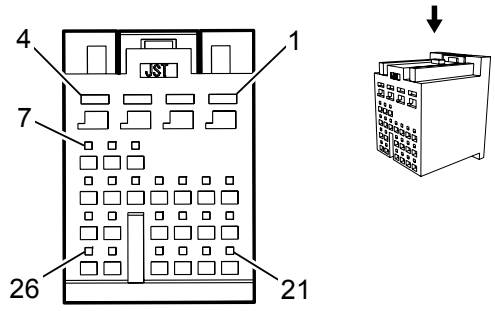


### Connector Part Information

Harness Type: Instrument Panel

OEM Connector: 13943345

Service Connector: Pending

Description: 26-Way F 0.64, 2.8 Series (NA)

### *Terminal Part Information*

| Terminal Type ID | Terminated Lead | Diagnostic Test Probe | Terminal Removal Tool | Service Terminal | Tray | Core Crimp | Insulation Crimp |
|---|---|---|---|---|---|---|---|
| I | Pending | J-35616-35 (VT) | J-38125-12A | SNAC-A061T-M2.8 | 20 | E | A |
| II | Pending | J-35616-64B (L-BU) | J-38125-22 | Not Available | Not Available | Not Available | Not Available |
| III | Pending | J-35616-35 (VT) | J-38125-12A | SNAC-A061T-M2.8 | 20 | C | A |

### *K9 Body Control Module X1*

| Pin | Size | Color | Circuit | Function | Terminal Type ID | Option |
|---|---|---|---|---|---|---|
| 1 | 0.75 | BK | 1850 | Ground | I | - |
| 2 | 0.75 | RD/D-BU | 2540 | Battery Positive Voltage | I | - |
| 3 | 1 | RD/GY | 2140 | Battery Positive Voltage | III | - |
| 4 | 0.5 | RD/BN | 2240 | Battery Positive Voltage | I | - |
| 5 | 0.5 | WH | 6816 | Indicator Dimming Control | II | - |
| 6 | - | - | - | Not Occupied | - | - |
| 7 | 0.35 | BK/YE | 5005 | Instrument Panel Lamp Dimmer Switch Low Reference | II | - |
| 8-9 | - | - | - | Not Occupied | - | - |
| 10 | 0.5 | D-BU/VT | 1134 | Park Brake Switch Signal | II | - |
| 11 | 0.35 | L-GN/BN | 306 | Headlamp Switch Headlamps Off Signal Control | II | - |
| 12 | - | - | - | Not Occupied | - | - |
| 13 | 0.35 | D-BU/RD | 1688 | 5 Volt Reference | II | - |
| 14 | 0.35 | GY/L-GN | 328 | Interior Lamp Control Switch Signal | II | - |

| | | | | | | |
|---|---|---|---|---|---|---|
| 15 | 0.35 | D-BU/GY | 192 | Front Fog Lamp Switch Signal | II | - |
| 16 | 0.35 | WH/VT | 103 | Headlamp Switch On Signal | II | - |
| 17-18 | - | - | - | Not Occupied | - | - |
| 19 | 0.35 | BK/L-GN | 552 | Sensor Low Reference | II | - |
| 20 | - | - | - | Not Occupied | - | - |
| 21 | 0.35 | GY | 728 | Security Indicator Control | II | - |
| 22 | 0.35 | L-GN/GY | 13 | Headlamp Switch Park Lamp Signal | II | - |
| 23 | 0.5 | VT/L-GN | 7558 | LED Ambient Lighting Control 2 | II | - |
| 24 | 0.5 | WH | 2501 | High Speed GMLAN Serial Data (-) (1) | II | - |
| 25 | 0.5 | D-BU | 2500 | High Speed GMLAN Serial Data (+) (1) | II | - |
| 26 | 0.35 | D-BU/WH | 3275 | Remote Function Actuator Receive Signal | II | - |

## K9 Body Control Module X2

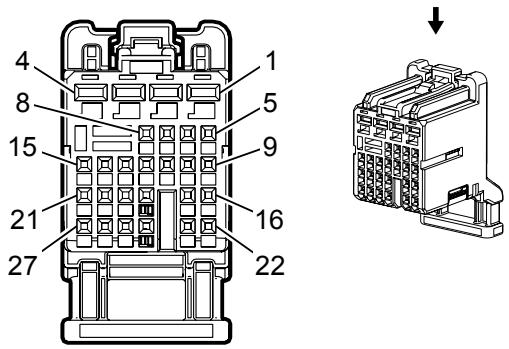


### Connector Part Information

Harness Type: Instrument Panel

OEM Connector: 13943361

Service Connector: 13576637

Description: 27-Way F 0.64, 2.8 Series (L-BU)

### *Terminal Part Information*

| Terminal Type ID | Terminated Lead | Diagnostic Test Probe | Terminal Removal Tool | Service Terminal | Tray | Core Crimp | Insulation Crimp |
|---|---|---|---|---|---|---|---|
| I | Pending | J-35616-35 (VT) | J-38125-12A | SNAC-A061T-M2.8 | 20 | E | A |
| II | Pending | J-35616-64B (L-BU) | J-38125-22 | Not Available | Not Available | Not Available | Not Available |

### *K9 Body Control Module X2*

| Pin | Size | Color | Circuit | Function | Terminal Type ID | Option |
|---|---|---|---|---|---|---|
| 1 | 0.5 | RD/WH | 2740 | Battery Positive Voltage | I | - |
| 2 | 0.75 | BK | 1850 | Ground | I | - |
| 3 | 0.5 | RD/BN | 2940 | Battery Positive Voltage | I | - |
| 4 | 0.75 | RD/VT | 4040 | Battery Positive Voltage | I | - |
| 5 | - | - | - | Not Occupied | - | - |
| 6 | 0.35 | GY | 5697 | Child Lockout Indicator | II | - |
| 7 | 0.35 | WH/L-GN | 526 | Stop Lamp Switch Signal | II | - |
| 8 | 0.5 | YE | 6817 | LED Backlight Dimming Control | II | - |
| 9 | 0.35 | YE/GY | 44 | Instrument Panel Lamp Dimmer Switch Signal | II | - |
| 10 | 0.35 | WH/D-BU | 278 | Ambient Light Sensor Signal | II | - |
| 11-12 | - | - | - | Not Occupied | - | - |
| 13 | 0.35 | GY/RD | 598 | 5 Volt Reference | II | - |
| 14 | 0.35 | D-BU/VT | 1788 | Traction Control Switch Signal (1) | II | - |
| 15 | 0.35 | BN/WH | 781 | Driver Door Lock Switch Unlock Signal | II | - |

| | | | | | | |
|---|---|---|---|---|---|---|
| 16 | 0.35 | GY | 3273 | Remote Function Actuator Return | II | - |
| 17 | - | - | - | Not Occupied | - | - |
| 18 | 0.5 | GY | 158 | Cargo Lamp Switch Signal | II | - |
| 19 | 0.35 | BN/YE | 780 | Driver Door Lock Switch Lock Signal | II | - |
| 20 | 0.5 | WH/D-BU | 3691 | Trailer Brake Apply Signal | II | - |
| 21 | 0.5 | L-GN/GY | 6135 | Linear Interconnect Network Bus 4 | II | - |
| 22-24 | - | - | - | Not Occupied | - | - |
| 25 | 0.35 | GY/WH | 3272 | Remote Function Actuator Supply Voltage | II | - |
| 26 | 0.35 | L-GN/WH | 111 | Hazard Switch Signal | II | - |
| 27 | 0.35 | YE/L-GN | 3274 | Remote Function Actuator Transmit Signal | II | - |

## K9 Body Control Module X3

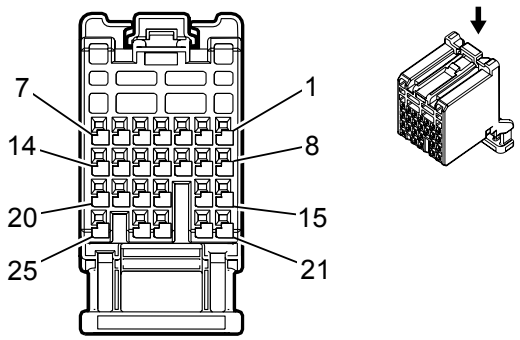


### Connector Part Information

Harness Type:

OEM Connector: HATTPB-25-3C-LM

Service Connector: Service by Harness - See Part Catalog

Description: 25 F 0.64 Series (GN)

### *Terminal Part Information*

| Terminal Type ID | Terminated Lead | Diagnostic Test Probe | Terminal Removal Tool | Service Terminal | Tray | Core Crimp | Insulation Crimp |
|---|---|---|---|---|---|---|---|
| I | Not Available | Not Available | Not Available | Not Available | Not Available | Not Available | Not Available |

### *K9 Body Control Module X3*

| Pin | Size | Color | Circuit | Function | Terminal Type ID | Option |
|---|---|---|---|---|---|---|
| 1 | 0.5 | GN/GY | 3277 | Vehicle Anti-Theft System Immobilizer Return | I | - |
| 2 | 0.5 | GN/VT | 7533 | Linear Interconnect Network Bus 11 | I | - |
| 3 | 0.5 | GY/BK | 3276 | Vehicle Anti-Theft System Immobilizer Supply Voltage | I | - |
| 4 | 0.5 | WH/RD | 1444 | 12 Volt Reference | I | - |
| 5 | 0.5 | VT/YE | 4 | Accessory Voltage | I | - |
| 6 | 0.5 | VT/BK | 3 | Run/Crank Ignition 1 Voltage | I | - |
| 7-8 | - | - | - | Not Occupied | - | - |
| 9 | 0.5 | BN/GN | 1884 | Cruise Control Set/Coast/Resume/Accelerate Switch Signal | I | - |
| 10 | 0.5 | BK/GY | 6009 | Low Reference | I | - |
| 11 | 0.5 | WH | 524 | Headlamp Dimmer Switch High Beam Signal | I | - |
| 12 | 0.5 | WH/GN | 663 | Hazard Switch Left Turn Signal | I | - |
| 13 | 0.5 | YE/BU | 1714 | Windshield Wiper Switch Low Signal | I | - |
| 14 | 0.5 | BU/GY | 553 | Shift Select Switch Performance Signal | I | - |
| 15 | 0.5 | WH/VT | 1020 | Off/Run/Crank Voltage | I | - |
| 16 | 0.5 | GY/GN | 5737 | Adaptive Cruise Control Gap Up/Down Switch Signal | I | - |

| | | | | | | |
|---|---|---|---|---|---|---|
| 17 | 0.5 | YE/BN | 307 | Headlamp Switch Flash To Pass Signal | I | - |
| 18 | 0.5 | GN/WH | 3287 | Horn Switch Signal | I | - |
| 19 | 0.5 | OG | 7527 | Linear Interconnect Network Bus 5 | I | - |
| 20 | 0.5 | GY | 1715 | Windshield Wiper Switch High Signal | I | - |
| 21 | 0.5 | VT/YE | 5526 | Tap Up/Tap Down Switch Signal | I | - |
| 22 | 0.5 | WH/BK | 1073 | Ignition Key Resistor Signal | I | - |
| 23 | 0.5 | GY/YE | 7595 | Auto Wiper On Signal | I | - |
| 24 | 0.5 | VT/BU | 664 | Hazard Switch Right Turn Signal | I | - |
| 25 | 0.5 | WH/BK | 94 | Windshield Washer Switch Signal | I | - |

## K9 Body Control Module X4

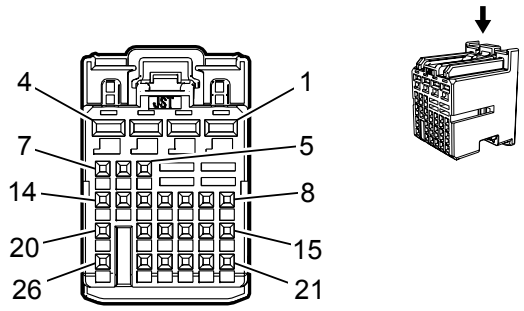


### Connector Part Information

Harness Type: Body

OEM Connector: 13962485

Service Connector: 13587579

Description: 26-Way F 0.64, 2.8 Series (BK)

### *Terminal Part Information*

| Terminal Type ID | Terminated Lead | Diagnostic Test Probe | Terminal Removal Tool | Service Terminal | Tray | Core Crimp | Insulation Crimp |
|---|---|---|---|---|---|---|---|
| I | Pending | J-35616-35 (VT) | J-38125-12A | SNAC-A061T-M2.8 | 20 | E | A |
| II | Pending | J-35616-64B (L-BU) | J-38125-22 | Not Available | Not Available | Not Available | Not Available |

### *K9 Body Control Module X4*

| Pin | Size | Color | Circuit | Function | Terminal Type ID | Option |
|---|---|---|---|---|---|---|
| 1 | 0.75 | YE | 712 | Left Headlamp Low Beam Supply Voltage | I | - |
| 2 | 0.75 | YE | 312 | Right Headlamp Low Beam Supply Voltage | I | - |
| 3 | 0.75 | L-GN/VT | 1315 | Right Front Turn Signal Lamp Supply Voltage | I | - |
| 4 | 0.5 | BN/L-GN | 19 | Right Rear Stop/Turn Lamp Supply Voltage | I | - |
| 5-6 | - | - | - | Not Occupied | - | - |
| 7 | 0.75 | GY/D-BU | 7538 | Left Front DRL Supply Voltage | II | - |
| 8-10 | - | - | - | Not Occupied | - | - |
| 11 | 0.5 | VT/WH | 5065 | Stop Lamp Relay Coil Supply Voltage | II | - |
| 12 | 0.35 | GY/VT | 755 | RAP Relay Coil Control | II | - |
| 13 | 0.5 | L-GN/YE | 6846 | Rear License Lamp Supply Voltage | II | - |
| 14 | 0.35 | BN/GY | 2268 | Windshield Washer Relay Control | II | - |
| 15 | 0.35 | L-GN/VT | 5199 | Run/Crank Relay Coil Control | II | - |
| 16 | 0.35 | GY | 91 | Windshield Wiper Motor Relay Coil Supply Voltage | II | - |
| 17 | 0.5 | BN/L-GN | 196 | Windshield Wiper Motor Park Switch Signal | II | - |

| | | | | | | |
|---|---|---|---|---|---|---|
| 18 | 0.35 | WH/YE | 5075 | Current Sensor Signal | II | - |
| 19 | 0.35 | D-BU/YE | 6844 | ABS/TCS Hill Descent Control Switch Signal | II | - |
| 20 | 0.75 | RD/YE | 2340 | Battery Positive Voltage | II | - |
| 21 | 0.35 | D-BU/VT | 5076 | Current Sensor Supply Voltage | II | - |
| 22 | 0.35 | VT/YE | 5985 | Accessory Wakeup Serial Data | II | - |
| 23 | 0.5 | WH/D-BU | 5986 | Serial Data Communication Enable | II | - |
| 24 | 0.5 | BN/L-GN | 109 | Hood Ajar Switch Signal | II | - |
| 25 | 0.5 | L-GN/YE | 2081 | Exhaust Brake Switch Control | II | - |
| 26 | 0.75 | BK/WH | 451 | Signal Ground | II | - |

## K9 Body Control Module X5

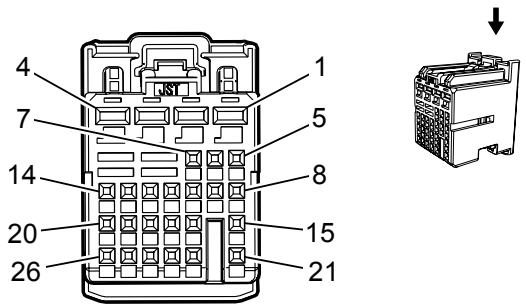


### Connector Part Information

Harness Type: Body

OEM Connector: 13962299

Service Connector: 13587577

Description: 26-Way F 0.64, 2.8 Series (BN)

### *Terminal Part Information*

| Terminal Type ID | Terminated Lead | Diagnostic Test Probe | Terminal Removal Tool | Service Terminal | Tray | Core Crimp | Insulation Crimp |
|---|---|---|---|---|---|---|---|
| I | Pending | J-35616-35 (VT) | J-38125-12A | SNAC-A061T-M2.8 | 20 | E | A |
| II | Pending | J-35616-64B (L-BU) | J-38125-22 | Not Available | Not Available | Not Available | Not Available |

### *K9 Body Control Module X5*

| Pin | Size | Color | Circuit | Function | Terminal Type ID | Option |
|---|---|---|---|---|---|---|
| 1 | 0.5 | YE/D-BU | 18 | Left Rear Stop/Turn Lamp Supply Voltage | I | - |
| 2 | 0.75 | D-BU/WH | 1314 | Left Front Turn Signal Lamp Supply Voltage | I | - |
| 3 | 0.75 | RD/L-GN | 5140 | Battery Positive Voltage | I | - |
| 4 | 0.75 | RD/WH | 3440 | Battery Positive Voltage | I | - |
| 5 | - | - | - | Not Occupied | - | - |
| 6 | 0.35 | BK/VT | 5077 | Current Sensor Low Reference | II | - |
| 7 | 0.75 | D-BU/BN | 7539 | Right Front DRL Supply Voltage | II | - |
| 8 | 0.35 | D-BU/WH | 5186 | Left Trailer Turn Signal Lamp | II | - |
| 9 | - | - | - | Not Occupied | - | - |
| 10 | 0.5 | BN/WH | 1317 | Fog Lamp Relay Control | II | - |
| 11 | - | - | - | Not Occupied | - | - |
| 12 | 0.35 | WH/D-BU | 6311 | Cruise/ETC/TCC Brake Signal | II | - |
| 13 | - | - | - | Not Occupied | - | - |
| 14 | 0.5 | VT/BN | 300 | Run Ignition Voltage | II | - |

| | | | | | | |
|---|---|---|---|---|---|---|
| 15 | 0.35 | L-GN/WH | 3438 | Exhaust Brake Switch Signal | II | - |
| 16 | 0.35 | VT/YE | 3267 | Child Security Lock Relay Control | II | - |
| 17 | 0.35 | YE/GY | 5187 | Right Trailer Turn Signal Lamp | II | - |
| 18 | 0.35 | BN/VT | 1969 | Headlamp High Beam Relay Control | II | - |
| 19 | 0.35 | BN/WH | 28 | Horn Relay Control | II | - |
| 20-21 | - | - | - | Not Occupied | - | - |
| 22 | 0.35 | D-BU | 45 | Park Lamp Relay Control | II | - |
| 23 | 0.35 | YE | 6812 | Out of Park Signal | II | - |
| 24 | 0.35 | WH/VT | 860 | Front Windshield Wiper Switch High Signal | II | - |
| 25 | - | - | - | Not Occupied | - | - |
| 26 | 0.35 | D-BU/BN | 38 | Backup Lamp Relay Control | II | - |

## K9 Body Control Module X6

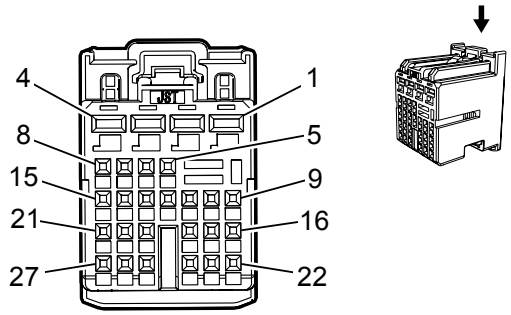


### Connector Part Information

Harness Type: Body

OEM Connector: 13962300

Service Connector: 13587576

Description: 27-Way F 0.64, 2.8 Series (L-PU)

### *Terminal Part Information*

| Terminal Type ID | Terminated Lead | Diagnostic Test Probe | Terminal Removal Tool | Service Terminal | Tray | Core Crimp | Insulation Crimp |
|---|---|---|---|---|---|---|---|
| I | Pending | J-35616-35 (VT) | J-38125-12A | SNAC-A061T-M2.8 | 20 | C | A |
| II | Pending | J-35616-64B (L-BU) | J-38125-22 | Not Available | Not Available | Not Available | Not Available |
| III | Pending | J-35616-35 (VT) | J-38125-12A | SNAC-A061T-M2.8 | 20 | E | A |

### *K9 Body Control Module X6*

| Pin | Size | Color | Circuit | Function | Terminal Type ID | Option |
|---|---|---|---|---|---|---|
| 1 | 1.5 | D-BU/WH | 195 | Door Lock Control | I | - |
| 2 | 1.5 | GY/L-GN | 3271 | Door Lock Control (2) | I | - |
| 3 | 1.5 | BK | 1850 | Ground | I | - |
| 4 | 1.5<br>0.75 | BN/YE<br>BN/YE | 294<br>294 | Door Lock Actuator Unlock Control<br>Door Lock Actuator Unlock Control | I | - |
| 5 | - | - | - | Not Occupied | - | - |
| 6 | 0.35 | D-BU/VT | 1124 | Door Lock Key Switch Unlock Signal | II | - |
| 7 | - | - | - | Not Occupied | - | - |
| 8 | 0.35 | VT/WH | 5908 | Passenger Seat Vent Motor Control (1) | II | - |
| 9 | 0.5 | L-GN/D-BU | 6133 | Linear Interconnect Network Bus 2 | II | - |
| 10 | 0.5 | L-GN/YE | 6134 | Linear Interconnect Network Bus 3 | II | - |
| 11-16 | - | - | - | Not Occupied | - | - |
| 17 | 0.35 | L-GN/VT | 5906 | Driver Seat Vent Motor Control (1) | II | - |
| 18-20 | - | - | - | Not Occupied | - | - |

| | | | | | | |
|---|---|---|---|---|---|---|
| 18-20 | - | - | - | Not Occupied | - | - |
| 21 | 0.35 | WH/VT | 3270 | Driver Door Lock Motor Status | II | - |
| 22-23 | - | - | - | Not Occupied | - | - |
| 24 | 0.5 | D-BU | 2500 | High Speed GMLAN Serial Data (+) (1) | II | - |
| 25 | 0.5 | WH | 2501 | High Speed GMLAN Serial Data (-) (1) | II | - |
| 26 | 0.5 | BN/WH | 1429 | Standing Lamp Relay Control | II | - |
| 27 | - | - | - | Not Occupied | - | - |

## K9 Body Control Module X7

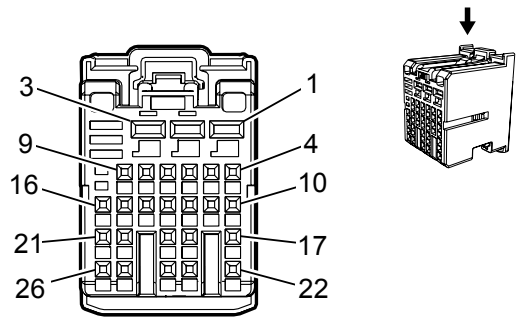


### Connector Part Information

Harness Type: Body

OEM Connector: 13962301

Service Connector: 13587578

Description: 26-Way F 0.64, 2.8 Series (L-GY)

### *Terminal Part Information*

| Terminal Type ID | Terminated Lead | Diagnostic Test Probe | Terminal Removal Tool | Service Terminal | Tray | Core Crimp | Insulation Crimp |
|---|---|---|---|---|---|---|---|
| I | Pending | J-35616-35 (VT) | J-38125-12A | SNAC-A061T-M2.8 | 20 | E | A |
| II | Pending | J-35616-64B (L-BU) | J-38125-22 | Not Available | Not Available | Not Available | Not Available |

### *K9 Body Control Module X7*

| Pin | Size | Color | Circuit | Function | Terminal Type ID | Option |
|---|---|---|---|---|---|---|
| 1 | 0.5 | GY | 157 | Interior Lamp Control | I | - |
| 2 | - | - | - | Not Occupied | - | - |
| 3 | 0.5 | WH/BN | 6815 | Inadvertent Power Control | I | - |
| 4-5 | - | - | - | Not Occupied | - | - |
| 6 | 0.5 | YE/WH | 816 | Brake Transmission Shift Interlock Solenoid Control | II | - |
| 7 | - | - | - | Not Occupied | - | - |
| 8 | 0.5 | GY/L-GN | 5996 | Driver Outside Rear View Mirror Puddle Lamp Supply Voltage | II | - |
| 9 | 0.5 | YE | 6817 | LED Backlight Dimming Control | II | - |
| 10-11 | - | - | - | Not Occupied | - | - |
| 12 | 0.35 | BN/WH | 3269 | Child Security Lock Motor Status Signal Left Rear | II | - |
| 13 | - | - | - | Not Occupied | - | - |
| 14 | 0.35 | GY | 746 | Right Front Door Ajar Switch Signal | II | - |
| 15 | 0.35 | YE/BN | 3265 | Child Security Lock Switch Signal | II | - |
| 16 | 0.5 | WH/D-BU | 3691 | Trailer Brake Activation Signal | II | - |

| | | | | | | |
|---|---|---|---|---|---|---|
| 17 | - | - | - | Not Occupied | - | - |
| 18 | 0.35 | GY/BK | 3268 | Child Security Lock Motor Status Signal Right Rear | II | - |
| 19 | 0.35 | GY | 156 | Courtesy Lamp Switch Signal | II | - |
| 20 | - | - | - | Not Occupied | - | - |
| 21 | 0.35 | YE/VT | 244 | Passenger Door Lock Switch Lock Control | II | - |
| 22 | 0.35 | WH/YE | 7557 | LED Ambient Lighting Control 1 | II | - |
| 23 | 0.5 | L-GN | 5060 | Low Speed GMLAN Serial Data | II | - |
| 24 | 0.35 | BN/VT | 245 | Passenger Door Lock Switch Unlock Control | II | - |
| 25 | 0.35 | GY | 745 | Left Front Door Ajar Switch Signal | II | - |
| 26 | - | - | - | Not Occupied | - | - |

## K17 Electronic Brake Control Module

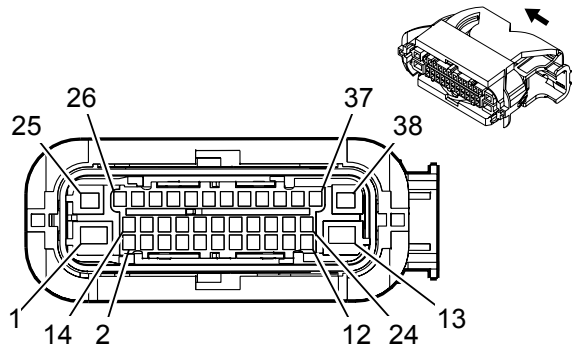


### Connector Part Information

Harness Type: Chassis

OEM Connector: 13964768

Service Connector: 19301816

Description: 38-Way F 1.5, 2.8, 4.8 MCP Series, Sealed

### *Terminal Part Information*

| Terminal Type ID | Terminated Lead | Diagnostic Test Probe | Terminal Removal Tool | Service Terminal | Tray | Core Crimp | Insulation Crimp |
|---|---|---|---|---|---|---|---|
| I | Pending | J-35616-16 (L-GN) | J-38125-12A | Not Available | Not Available | Not Available | Not Available |
| II | Pending | Pending | Pending | Not Available | Not Available | Not Available | Not Available |
| III | Pending | J-35616-64B (L-BU) | J-38125-215A | Not Available | Not Available | Not Available | Not Available |
| IV | Pending | J-35616-42 (RD) | J-38125-11A | Not Available | Not Available | Not Available | Not Available |

### *K17 Electronic Brake Control Module*

| Pin | Size | Color | Circuit | Function | Terminal Type ID | Option |
|---|---|---|---|---|---|---|
| 1 | 5 | RD/YE | 442 | Battery Positive Voltage | I | - |
| 2 | - | - | - | Not Occupied | - | - |
| 3 | 0.5 | GY/YE | 7128 | Wheel Speed Sensor Supply Voltage Right Rear | II | - |
| 4 | 0.5 | VT | 882 | Wheel Speed Sensor Signal Right Rear | II | - |
| 5 | 0.5 | D-BU/YE | 6105 | High Speed GMLAN Serial Data (+) (2) | II | - |
| 6 | 0.5 | WH | 6106 | High Speed GMLAN Serial Data (-) (2) | II | - |
| 7 | - | - | - | Not Occupied | - | - |
| 8 | 0.5 | WH | 2501 | High Speed GMLAN Serial Data (-) (1) | II | - |
| 9 | 0.5 | D-BU | 2500 | High Speed GMLAN Serial Data (+) (1) | II | - |
| 10 | 0.5 | GY/BN | 7065 | Wheel Speed Sensor Supply Voltage Right Front | II | - |
| 11 | 0.5 | YE | 872 | Wheel Speed Sensor Signal Right Front | II | - |
| 12 | - | - | - | Not Occupied | - | - |

| | | | | | | |
|---|---|---|---|---|---|---|
| 13 | 5 | BK | 2150 | Ground | I | - |
| 14-16 | - | - | - | Not Occupied | - | - |
| 17 | 0.5 | L-GN/BN | 2087 | Combined Vehicle Inertial Sensor Supply Voltage | III | - |
| 18 | 0.5 | L-GN/GY | 333 | Brake Fluid Level Sensor Signal | II | - |
| 19 | - | - | - | Not Occupied | - | - |
| 20 | 0.5 | WH | 2501 | High Speed GMLAN Serial Data (-) (1) | II | - |
| 21 | 0.5 | D-BU | 2500 | High Speed GMLAN Serial Data (+) (1) | II | - |
| 22-24 | - | - | - | Not Occupied | - | - |
| 25 | 2.5 | RD/VT | 1640 | Battery Positive Voltage | IV | - |
| 26-27 | - | - | - | Not Occupied | - | - |
| 28 | 0.5 | WH/D-BU | 5986 | Serial Data Communication Enable | II | - |
| 29 | 0.5 | GY/BK | 7127 | Wheel Speed Sensor Supply Voltage Left Rear | II | - |
| 30 | 0.5 | D-BU | 884 | Wheel Speed Sensor Signal Left Rear | II | - |
| 31-32 | - | - | - | Not Occupied | - | - |
| 33 | 0.5 | L-GN/GY | 817 | Vehicle Speed Signal | II | - |
| 34 | - | - | - | Not Occupied | - | - |
| 35 | 0.5 | GY/WH | 7064 | Wheel Speed Sensor Supply Voltage Left Front | II | - |
| 36 | 0.5 | GY | 830 | Wheel Speed Sensor Signal Left Front | II | - |
| 37 | - | - | - | Not Occupied | - | - |
| 38 | 2.5 | BK | 2150 | Ground | IV | - |

## K19 Suspension Control Module

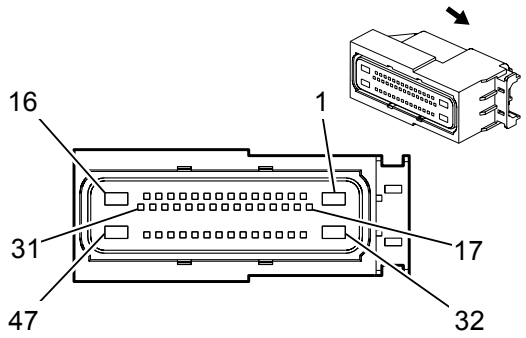


### Connector Part Information

Harness Type: Chassis

OEM Connector: 15491306

Service Connector: 19168025

Description: 47-Way F 0.64, 6.3 Series, Sealed (BK)

### *Terminal Part Information*

| Terminal Type ID | Terminated Lead | Diagnostic Test Probe | Terminal Removal Tool | Service Terminal | Tray | Core Crimp | Insulation Crimp |
|---|---|---|---|---|---|---|---|
| I | 13578883 | J-35616-64B (L-BU) | J-38125-215A | SAITS-A03T-M064 | 14 | 9 | 9 |
| II | 13327187 | J-35616-42 (RD) | J-38125-553 | 15476168 | 5 | F | 3 |
| III | 13579766 | J-35616-64B (L-BU) | J-38125-215A | SAITS-A03T-M064 | 14 | 9 | 9 |
| IV | 13579755 | J-35616-42 (RD) | J-38125-553 | 15476168 | 5 | F | 3 |

### *K19 Suspension Control Module*

| Pin | Size | Color | Circuit | Function | Terminal Type ID | Option |
|---|---|---|---|---|---|---|
| 1 | - | - | - | Not Occupied | - | - |
| 2 | 0.5 | BK/L-GN | 1209 | Left Rear Strut Position Sensor Low Reference | I | - |
| 3 | 0.5 | YE/WH | 1213 | Right Front Strut Position Sensor Signal | I | - |
| 4 | - | - | - | Not Occupied | - | - |
| 5 | 0.5 | BK/YE | 1215 | Right Rear Strut Position Sensor Low Reference | I | - |
| 6 | 0.5 | BN/WH | 1207 | Left Front Strut Position Sensor Signal | I | - |
| 7-11 | - | - | - | Not Occupied | - | - |
| 12 | 0.5 | D-BU/YE | 6105 | High Speed GMLAN Serial Data (+) (2) | I | - |
| 13 | 0.5 | D-BU/YE | 6105 | High Speed GMLAN Serial Data (+) (2) | I | - |
| 14 | 0.5 | WH | 6106 | High Speed GMLAN Serial Data (-) (2) | I | - |
| 15 | 0.5 | WH | 6106 | High Speed GMLAN Serial Data (-) (2) | I | - |
| 16 | 2 | WH/D-BU | 5986 | Serial Data Communication Enable | II | - |

| | | | | | | |
|---|---|---|---|---|---|---|
| 17 | 0.5 | L-GN/WH | 1210 | Left Rear Strut Position Sensor Signal | I | - |
| 18 | 0.5 | BK/GY | 1212 | Right Front Strut Position Sensor Low Reference | I | - |
| 19 | - | - | - | Not Occupied | - | - |
| 20 | 0.5 | L-GN/GY | 1216 | Right Rear Strut Position Sensor Signal | I | - |
| 21 | 0.5 | BK/D-BU | 1206 | Left Front Strut Position Sensor Low Reference | I | - |
| 22-23 | - | - | - | Not Occupied | - | - |
| 24 | 0.5 | WH | 2501 | High Speed GMLAN Serial Data (-) (1) | I | - |
| 25 | 0.5 | WH | 2501 | High Speed GMLAN Serial Data (-) (1) | I | - |
| 26 | - | - | - | Not Occupied | - | - |
| 27 | 0.75 | BN | 1009 | Right Front Strut Motor Decrease Damping Control | III | - |
| 28 | 0.75 | WH/BK | 1006 | Right Front Strut Motor Increase Damping Control | III | - |
| 29 | - | - | - | Not Occupied | - | - |
| 30 | 0.75 | WH/L-GN | 1005 | Left Front Strut Motor Decrease Damping Control | III | - |
| 31 | 0.75 | WH/GY | 1448 | Left Front Strut Motor Increase Damping | III | - |
| 32 | 3 | RD/L-GN | 2440 | Battery Positive Voltage | II | - |
| 33 | 0.5 | YE/RD | 1208 | Left Rear Strut Position Sensor Voltage Reference | I | - |
| 34 | 0.5 | BN/RD | 1211 | Right Front Strut Position Sensor Voltage Reference | I | - |
| 35 | 0.5 | L-GN/RD | 1214 | Right Rear Strut Position Sensor Voltage Reference | I | - |
| 36 | 0.5 | D-BU/RD | 1205 | Left Front Strut Position Sensor Voltage Reference | I | - |
| 37-38 | - | - | - | Not Occupied | - | - |
| 39 | 0.5 | D-BU | 2500 | High Speed GMLAN Serial Data (+) (1) | I | - |
| 40 | 0.5 | D-BU | 2500 | High Speed GMLAN Serial Data (+) (1) | I | - |
| 41 | - | - | - | Not Occupied | - | - |
| 42 | 0.75 | WH/BK | 1013 | Left Rear Strut Motor Decrease Damping Control | III | - |
| 43 | 0.75 | BN/VT | 1010 | Left Rear Strut Motor Increase Damping Control | III | - |
| 44 | - | - | - | Not Occupied | - | - |
| 45 | 0.75 | VT | 1017 | Right Rear Strut Motor Decrease Damping | III | - |
| 46 | 0.75 | YE | 1014 | Right Rear Strut Motor Increase Damping | III | - |
| 47 | 4 | BK | 1750 | Ground | IV | - |

## K20 Engine Control Module X1

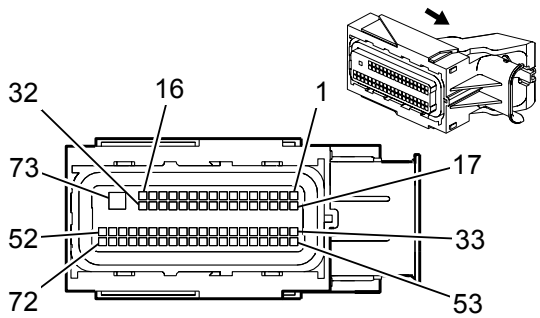


### Connector Part Information

Harness Type: Engine

OEM Connector: 13965965

Service Connector: Not Available

Description: 73-Way F 0.64, 2.8 Series, Sealed (BK with D-BU Terminal Position Assurance)

Harness Type: Engine

OEM Connector: 33113545

Service Connector: Not Available

Description: 73-Way F 0.64, 2.8 Series, Sealed (BK with D-BU Terminal Position Assurance)

### *Terminal Part Information*

| Terminal Type ID | Terminated Lead | Diagnostic Test Probe | Terminal Removal Tool | Service Terminal | Tray | Core Crimp | Insulation Crimp |
|---|---|---|---|---|---|---|---|
| I | Not Available | J-35616-64B | J-38125-12A | Not Available | Not Available | Not Available | Not Available |
| II | 13575291 | J-35616-35 (VT) | J-38125-11A | 7116-4152-02 | 9 | A | 5 |

### *K20 Engine Control Module X1*

| Pin | Size | Color | Circuit | Function | Terminal Type ID | Option |
|---|---|---|---|---|---|---|
| 1 | - | - | - | Not Occupied | - | - |
| 2 | 0.5 | D-BU/WH | 7446 | Fuel Line Pressure Sensor Signal | I | - |
| 3 | - | - | - | Not Occupied | - | - |
| 4 | 0.5 | YE/WH | 3200 | Throttle Inlet Absolute Pressure Sensor Signal | I | - |
| 5 | 0.5 | WH/RD | 3201 | Throttle Inlet Absolute Pressure Sensor 5V Reference | I | - |
| 6 | 0.5 | L-GN | 380 | A/C Refrigerant Pressure Sensor Signal | I | - |
| 7 | - | - | - | Not Occupied | - | - |
| 8 | 0.5 | BK/YE | 7447 | Fuel Line Pressure Sensor Low Reference | I | - |
| 9 | 0.5 | D-BU/WH | 890 | Fuel Tank Pressure Sensor Signal | I | - |
| 10 | 0.5 | YE/RD | 2709 | Fuel Tank Pressure Sensor 5 Volt Reference | I | - |
| 11-12 | - | - | - | Not Occupied | - | - |
| 13 | 0.5 | D-BU/GY | 636 | Outside Ambient Air Temperature Sensor Signal | I | - |

| | | | | | | |
|---|---|---|---|---|---|---|
| 14 | 0.5 | WH/RD | 1164 | Accelerator Pedal Position 5 Volt Reference (1) | I | - |
| 15 | 0.5 | YE/WH | 1161 | Accelerator Pedal Position Signal (1) | I | - |
| 16-20 | - | - | - | Not Occupied | - | - |
| 21 | 0.5 | BN/RD | 2700 | A/C Pressure Sensor 5 Volt Reference | I | - |
| 22 | 0.5 | BK/BN | 5514 | A/C Refrigerant Pressure Sensor Low Reference | I | - |
| 23 | - | - | - | Not Occupied | - | - |
| 24 | 0.5 | BN/RD | 7445 | Fuel Line Pressure Sensor 5V Reference | I | - |
| 25 | 0.5 | D-BU/VT | 1589 | Primary Fuel Level Sensor Signal | I | - |
| 26 | 0.5 | BK/L-GN | 6281 | Fuel Level Sensor Low Reference | I | - |
| 27-29 | - | - | - | Not Occupied | - | - |
| 30 | 0.5 | BK/D-BU | 1271 | Accelerator Pedal Position Low Reference (1) | I | - |
| 31 | - | - | - | Not Occupied | - | - |
| 32 | 0.5 | WH/GY | 459 | A/C Compressor Clutch Relay Control | I | - |
| 33 | 0.5 | BN/RD | 1274 | Accelerator Pedal Position 5 Volt Reference (2) | I | - |
| 34 | 0.5 | L-GN/WH | 1162 | Accelerator Pedal Position Signal (2) | I | - |
| 35 | - | - | - | Not Occupied | - | - |
| 36 | 0.5 | D-BU/BK | 7493 | High Speed GMLAN Serial Data (+)(3) | I | - |
| 37 | 0.5 | WH | 7494 | High Speed GMLAN Serial Data (-)(3) | I | - |
| 38 | 0.5 | WH | 1579 | Fuel Temperature/Composition Signal | I | - |
| 39 | 0.5 | D-BU | 2500 | High Speed GMLAN Serial Data (+) (1) | I | - |
| 40 | 0.5 | WH | 2501 | High Speed GMLAN Serial Data (-) (1) | I | - |
| 41-43 | - | - | - | Not Occupied | - | - |
| 44 | 0.5 | GY | 5660 | Fuel Pump Controller Data Out Signal | I | - |
| 45 | - | - | - | Not Occupied | - | - |
| 46 | 0.5 | BN/WH | 419 | Check Engine Indicator Control | I | - |
| 47 | 0.5<br>0.5 | GY/RD<br>WH | 6109<br>5359 | Clutch Apply Sensor Voltage Reference<br>Brake Apply Sensor Supply Voltage | I | - |
| 48 | 0.5<br>0.5 | D-BU/YE<br>YE | 5361<br>6111 | Brake Apply Sensor Signal<br>Clutch Apply Sensor Signal | I | - |
| 49-50 | - | - | - | Not Occupied | - | - |
| 51 | 0.5 | VT/L-GN | 439 | Run/Crank Ignition 1 Voltage | I | - |
| 52 | 0.5 | RD/BN | 440 | Battery Positive Voltage | I | - |

| | | | | | | |
|---|---|---|---|---|---|---|
| 52 | 0.5 | RD/BN | 440 | Battery Positive Voltage | I | - |
| 53 | 0.5 | BK/PU | 1272 | Accelerator Pedal Position Low Reference (2) | I | - |
| 54-56 | - | - | - | Not Occupied | - | - |
| 57 | 0.5 | WH/D-BU | 6311 | Cruise/ETC/TCC Brake Signal | I | - |
| 58 | - | - | - | Not Occupied | - | - |
| 59 | 0.5 | BN/YE | 473 | High Speed Cooling Fan Relay Control | I | - |
| 60 | 0.5 | YE/WH | 1695 | Four Wheel Drive Wheel Lock Indicator | I | - |
| 61 | 0.5 | GY/BK | 1694 | Four Wheel Drive Low Signal | I | - |
| 62 | 0.5 | VT/D-BU | 5291 | Powertrain Main Relay Fused Supply (2) | I | - |
| 63 | 0.5 | YE/BK | 625 | Starter Enable Relay Control | I | - |
| 64-65 | - | - | - | Not Occupied | - | - |
| 66 | 0.5 | WH | 1310 | EVAP Canister Vent Solenoid Control | I | - |
| 67 | 0.5 | VT/D-BU | 5292 | Powertrain Main Relay Fused Supply (3) | I | - |
| 68 | 0.5<br>0.5 | BK/GY<br>BK/BN | 6110<br>5360 | Clutch Apply Sensor Low Reference<br>Brake Apply Sensor Low Reference | I | - |
| 69 | - | - | - | Not Occupied | - | - |
| 70 | 0.5 | VT/YE | 5985 | Accessory Wakeup Serial Data | I | - |
| 71 | - | - | - | Not Occupied | - | - |
| 72 | 0.5 | YE | 5991 | Powertrain Relay Coil Control | I | - |
| 73 | 2.5 | VT/D-BU | 5290 | Powertrain Main Relay Fused Supply (1) | II | - |

## K20 Engine Control Module X1

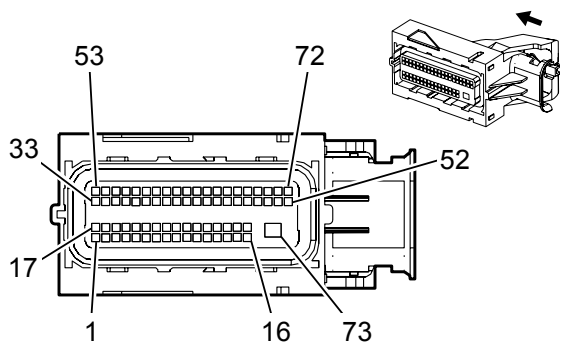


### Connector Part Information

Harness Type: Engine

OEM Connector: 13869716

Service Connector: Not Available

Description: 73-Way F 0.64, 2.8 Series, Sealed (BK w/ BU Terminal Postion Assurance)

### *Terminal Part Information*

| Terminal Type ID | Terminated Lead | Diagnostic Test Probe | Terminal Removal Tool | Service Terminal | Tray | Core Crimp | Insulation Crimp |
|---|---|---|---|---|---|---|---|
| I | Not Available | J-35616-64B | J-38125-12A | Not Available | Not Available | Not Available | Not Available |
| II | 13575291 | J-35616-35 (VT) | J-38125-11A | 7116-4152-02 | 9 | A | 5 |

### *K20 Engine Control Module X1*

| Pin | Size | Color | Circuit | Function | Terminal Type ID | Option |
|---|---|---|---|---|---|---|
| 1 | 0.75 | BN/WH | 3100 | DEF Dosing Valve Low Control | I | - |
| 2 | 0.75 | BN | 3099 | DEF Dosing Valve High Control | I | - |
| 3 | 0.5 | D-BU | 3105 | DEF Smart Pump Control | I | - |
| 4 | - | - | - | Not Occupied | - | - |
| 5 | 0.5 | YE/BK | 625 | Starter Enable Relay Control | I | - |
| 6 | 0.75 | L-GN | 3101 | DEF Reverting Valve High Control | I | - |
| 7 | 0.5 | BK/D-BU | 6783 | Exhaust Gas Temperature Sensor 2 Low Reference | I | - |
| 8 | - | - | - | Not Occupied | - | - |
| 9 | 0.5 | WH/D-BU | 6311 | Cruise/ETC/TCC Brake Signal | I | - |
| 10 | 0.5 | YE/WH | 1695 | Four Wheel Drive Wheel Lock Indicator | I | - |
| 11 | 0.5 | GY/BK | 1694 | Four Wheel Drive Low Signal | I | - |
| 12-13 | - | - | - | Not Occupied | - | - |
| 14 | 0.5 | GY/RD | 2365 | Cooling Fan Speed 5 Volt Reference | I | - |
| 15 | 0.5 | BK/GY | 2931 | Mass Air Flow Sensor Low Reference | I | - |

| | | | | | | |
|---|---|---|---|---|---|---|
| 16 | 0.5 | BK/D-BU | 6288 | Induction Air Temperature Sensor Low Reference | I | - |
| 17 | 0.5 | BN/WH | 419 | Check Engine Indicator Control | I | - |
| 18 | 0.5 | VT/BN | 2927 | Hydrocarbon Injector Low Control | I | - |
| 19 | 0.5 | WH/BK | 2366 | Cooling Fan Control Relay Speed Signal | I | - |
| 20 | 0.5 | L-GN/BN | 507 | Wait To Start Indicator Control | I | - |
| 21 | - | - | - | Not Occupied | - | - |
| 22 | 0.5 | BK/L-GN | 3657 | Exhaust Gas Temperature Sensor #3 Low Reference | I | - |
| 23-24 | - | - | - | Not Occupied | - | - |
| 25 | 0.5 | WH/GY | 1786 | Transmission Park/Neutral Signal (1) | I | - |
| 26 | 0.5 | VT/YE | 5985 | Accessory Wakeup Serial Data | I | - |
| 27 | 0.5 | BK/PU | 3661 | Exhaust Gas Temperature Sensor #5 Low Reference | I | - |
| 28 | 0.5 | BK/L-GN | 6281 | Fuel Level Sensor Low Reference | I | - |
| 29 | 0.5 | BN/YE | 3108 | DEF Pressure Sensor Signal | I | - |
| 30 | 0.5 | YE/RD | 3106 | DEF Pressure Sensor 5V Reference | I | - |
| 31 | 0.5 | BK/L-GN | 3107 | DEF Pressure Sensor Low Reference | I | - |
| 32 | - | - | - | Not Occupied | - | - |
| 33 | 0.5 | BN/D-BU | 2926 | Hydrocarbon Injector High Control | I | - |
| 34 | 0.5 | WH/GY | 459 | A/C Compressor Clutch Relay Control | I | - |
| 35 | 0.5 | BK/PU | 3104 | DEF Smart Pump Low Reference | I | - |
| 36 | 0.5 | BK/BN | 5514 | A/C Refrigerant Pressure Sensor Low Reference | I | - |
| 37 | - | - | - | Not Occupied | - | - |
| 38 | 0.5 | D-BU/L-GN | 5377 | Exhaust Gas Temperature Sensor (2) | I | - |
| 39 | 0.5 | L-GN/WH | 1162 | Accelerator Pedal Position Signal (2) | I | - |
| 40 | 0.5 | WH/D-BU | 6289 | Induction Air Temperature Sensor Signal | I | - |
| 41 | 0.5 | D-BU | 6053 | Exhaust Pressure Sensor Signal (1) | I | - |
| 42 | 0.5 | WH/RD | 1164 | Accelerator Pedal Position 5 Volt Reference (1) | I | - |
| 43 | 0.5 | WH/RD | 6054 | Exhaust Pressure Sensor 5 Volt Reference (1) | I | - |
| 44 | 0.5 | BK/YE | 6055 | Exhaust Pressure Sensor Low Reference (1) | I | - |
| 45 | 0.5 | WH | 7494 | High Speed GMLAN Serial Data (-)(3) | I | - |
| 46 | 0.5 | WH | 2501 | High Speed GMLAN Serial Data (-) (1) | I | - |
| 47 | - | - | - | Not Occupied | - | - |

| | | | | | | |
|---|---|---|---|---|---|---|
| 47 | - | - | - | Not Occupied | - | - |
| 48 | 0.5 | VT/L-GN | 439 | Run/Crank Ignition 1 Voltage | I | - |
| 49 | 0.5 | L-GN/WH | 492 | Mass Air Flow Sensor Signal | I | - |
| 50 | 0.75 | BN | 25 | Charge Indicator Control | I | - |
| 51 | 0.5 | BK/PU | 1272 | Accelerator Pedal Position Low Reference (2) | I | - |
| 52 | - | - | - | Not Occupied | - | - |
| 53 | 0.75 | WH/BK | 3102 | DEF Reverting Valve Low Control | I | - |
| 54 | 0.5 | GY | 3103 | DEF Smart Pump Supply Voltage | I | - |
| 55 | 0.5 | BK/D-BU | 1271 | Accelerator Pedal Position Low Reference (1) | I | - |
| 56 | 0.5 | D-BU/GY | 3660 | Exhaust Gas Temperature Sensor #5 Signal | I | - |
| 57 | 0.5 | GY/L-GN | 5378 | Exhaust Gas Temperature Sensor (3) | I | - |
| 58 | 0.5 | D-BU/VT | 1589 | Primary Fuel Level Sensor Signal | I | - |
| 59 | 0.5 | L-GN | 380 | A/C Refrigerant Pressure Sensor Signal | I | - |
| 60 | - | - | - | Not Occupied | - | - |
| 61 | 0.5 | YE/WH | 1161 | Accelerator Pedal Position Signal (1) | I | - |
| 62 | 0.5 | BN/RD | 1274 | Accelerator Pedal Position 5 Volt Reference (2) | I | - |
| 63 | 0.5 | BN/RD | 2700 | A/C Pressure Sensor 5 Volt Reference | I | - |
| 64 | - | - | - | Not Occupied | - | - |
| 65 | 0.5 | D-BU/BK | 7493 | High Speed GMLAN Serial Data (+)(3) | I | - |
| 66 | 0.5 | D-BU | 2500 | High Speed GMLAN Serial Data (+) (1) | I | - |
| 67 | 0.5 | RD/BN | 440 | Battery Positive Voltage | I | - |
| 68 | 0.5 | YE | 5991 | Powertrain Relay Coil Control | I | - |
| 69 | 0.5 | D-BU/VT | 2364 | Cooling Fan Speed Signal | I | - |
| 70 | 0.75 | GY | 23 | Generator Field Duty Cycle Signal | I | - |
| 71 | 0.5 | BK/BN | 6141 | Cooling Fan Speed Low Reference | I | - |
| 72 | 0.5 | BN/VT | 6399 | Replicated TOS Signal | I | - |
| 73 | 2.5 | VT/D-BU | 5290 | Powertrain Main Relay Fused Supply (1) | II | - |

# K20 Engine Control Module X1 (L96)

## Connector Part Information

Harness Type: Engine

OEM Connector: 13820449

Service Connector: Pending

Description: 56 F 0.64 Series, Sealed

### *Terminal Part Information*

| Terminal Type ID | Terminated Lead | Diagnostic Test Probe | Terminal Removal Tool | Service Terminal | Tray | Core Crimp | Insulation Crimp |
|---|---|---|---|---|---|---|---|
| I | Pending | J-35616-64B | J-38125-12A | Not Available | Not Available | Not Available | Not Available |

### *K20 Engine Control Module X1 (L96)*

| Pin | Size | Color | Circuit | Function | Terminal Type ID | Option |
|---|---|---|---|---|---|---|
| 1 | - | - | - | Not Occupied | - | - |
| 2 | 0.5 | L-GN/WH | 1162 | Accelerator Pedal Position Signal (2) | I | - |
| 3 | 0.5 | L-GN/WH | 492 | Mass Air Flow Sensor Signal | I | - |
| 4 | 0.5 | GY/BK | 1694 | Four Wheel Drive Low Signal | I | - |
| 5 | 0.5 | YE/WH | 1695 | Four Wheel Drive Wheel Lock Indicator | I | - |
| 6-9 | - | - | - | Not Occupied | - | - |
| 10 | 0.5 | YE/WH | 1161 | Accelerator Pedal Position Signal (1) | I | - |
| 11 | 0.5 | YE/WH | 3200 | Throttle Inlet Absolute Pressure Sensor Signal | I | - |
| 12 | 0.5 | L-GN | 380 | A/C Refrigerant Pressure Sensor Signal | I | - |
| 13 | 0.5 | BK/BN | 5514 | A/C Refrigerant Pressure Sensor Low Reference | I | - |
| 14 | 0.5 | YE/D-BU | 1465 | Secondary Fuel Pump Relay Control | I | - |
| 15 | - | - | - | Not Occupied | - | - |
| 16 | 0.5 | BN/RD | 1274 | Accelerator Pedal Position 5 Volt Reference (2) | I | - |
| 17 | - | - | - | Not Occupied | - | - |
| 18 | 0.5 | VT/YE | 5985 | Accessory Wakeup Serial Data | I | - |
| 19 | 0.5 | VT/L-GN | 439 | Run/Crank Ignition 1 Voltage | I | - |
| 20 | 0.5 | RD/BN | 440 | Battery Positive Voltage | I | - |
| 21-23 | - | - | - | Not Occupied | - | - |
| 24 | 0.5 | WH/RD | 1164 | Accelerator Pedal Position 5 Volt Reference (1) | I | - |
| 25 | 0.5 | WH/RD | 3201 | Throttle Inlet Absolute Pressure Sensor 5V Reference | I | - |
| 26 | 0.5 | BN/RD | 2700 | A/C Pressure Sensor 5 Volt Reference | I | - |

| | | | | | | |
|---|---|---|---|---|---|---|
| 27 | 0.5 | YE/BK | 625 | Starter Enable Relay Control | I | - |
| 28 | 0.5 | L-GN/GY | 465 | Fuel Pump Primary Relay Control | I | - |
| 29 | 0.5 | D-BU | 2500 | High Speed GMLAN Serial Data (+) (1) | I | - |
| 30 | 0.5 | BK/PU | 1272 | Accelerator Pedal Position Low Reference (2) | I | - |
| 31 | 0.5 | BK/PU | 2760 | Intake Air Temperature Sensor Low Reference | I | - |
| 32 | - | - | - | Not Occupied | - | - |
| 33 | 0.5 | WH/D-BU | 6311 | Cruise/ETC/TCC Brake Signal | I | - |
| 34 | 0.5 | WH/GY | 1786 | Transmission Park/Neutral Signal (1) | I | - |
| 35-37 | - | - | - | Not Occupied | - | - |
| 38 | 0.5 | BK/D-BU | 1271 | Accelerator Pedal Position Low Reference (1) | I | - |
| 39 | 0.5 | WH/YE | 3202 | Throttle Inlet Absolute Pressure Sensor 5V Return | I | - |
| 40 | 0.5 | YE | 5991 | Powertrain Relay Coil Control | I | - |
| 41-42 | - | - | - | Not Occupied | - | - |
| 43 | 0.5 | WH | 2501 | High Speed GMLAN Serial Data (-) (1) | I | - |
| 44 | - | - | - | Not Occupied | - | - |
| 45 | 0.5 | WH/D-BU | 6289 | Induction Air Temperature Sensor Signal | I | - |
| 46 | - | - | - | Not Occupied | - | - |
| 47 | 0.5 | BN | 25 | Charge Indicator Control | I | - |
| 48-51 | - | - | - | Not Occupied | - | - |
| 52 | 0.5 | BN/WH | 419 | Check Engine Indicator Control | I | - |
| 53 | 0.5 | WH/GY | 459 | A/C Compressor Clutch Relay Control | I | - |
| 54-55 | - | - | - | Not Occupied | - | - |
| 56 | 0.5 | WH | 1310 | EVAP Canister Vent Solenoid Control | I | - |

## K20 Engine Control Module X1 (LML)

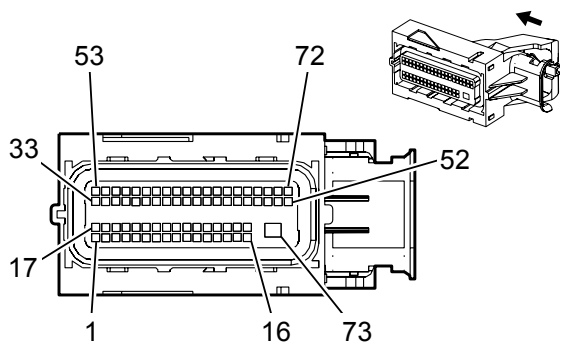


### Connector Part Information

Harness Type: Engine

OEM Connector: 13869716

Service Connector: Pending

Description: 73-Way F 0.64, 2.8 Series, Sealed (BK w/ BU Terminal Postion Assurance)

### *Terminal Part Information*

| Terminal Type ID | Terminated Lead | Diagnostic Test Probe | Terminal Removal Tool | Service Terminal | Tray | Core Crimp | Insulation Crimp |
|---|---|---|---|---|---|---|---|
| I | Pending | J-35616-64B | J-38125-12A | Not Available | Not Available | Not Available | Not Available |
| II | 13575291 | J-35616-35 (VT) | J-38125-11A | 7116-4152-02 | 9 | A | 5 |

### *K20 Engine Control Module X1 (LML)*

| Pin | Size | Color | Circuit | Function | Terminal Type ID | Option |
|---|---|---|---|---|---|---|
| 1 | 0.75 | BN/WH | 3100 | DEF Dosing Valve Low Control | I | - |
| 2 | 0.75 | BN | 3099 | DEF Dosing Valve High Control | I | - |
| 3 | 0.5 | D-BU | 3105 | DEF Smart Pump Control | I | - |
| 4 | - | - | - | Not Occupied | - | - |
| 5 | 0.5 | YE/BK | 625 | Starter Enable Relay Control | I | - |
| 6 | 0.75 | L-GN | 3101 | DEF Reverting Valve High Control | I | - |
| 7 | 0.5 | BK/D-BU | 6783 | Exhaust Gas Temperature Sensor 2 Low Reference | I | - |
| 8 | - | - | - | Not Occupied | - | - |
| 9 | 0.5 | WH/D-BU | 6311 | Cruise/ETC/TCC Brake Signal | I | - |
| 10 | 0.5 | YE/WH | 1695 | Four Wheel Drive Wheel Lock Indicator | I | - |
| 11 | 0.5 | GY/BK | 1694 | Four Wheel Drive Low Signal | I | - |
| 12-13 | - | - | - | Not Occupied | - | - |
| 14 | 0.5 | GY/RD | 2365 | Cooling Fan Speed 5 Volt Reference | I | - |
| 15 | 0.5 | BK/GY | 2931 | Mass Air Flow Sensor Low Reference | I | - |

| | | | | | | |
|---|---|---|---|---|---|---|
| 16 | 0.5 | BK/D-BU | 6288 | Induction Air Temperature Sensor Low Reference | I | - |
| 17 | 0.5 | BN/WH | 419 | Check Engine Indicator Control | I | - |
| 18 | 0.5 | VT/BN | 2927 | Hydrocarbon Injector Low Control | I | - |
| 19 | 0.5 | WH/BK | 2366 | Cooling Fan Control Relay Speed Signal | I | - |
| 20 | 0.5 | L-GN/BN | 507 | Wait To Start Indicator Control | I | - |
| 21 | - | - | - | Not Occupied | - | - |
| 22 | 0.5 | BK/L-GN | 3657 | Exhaust Gas Temperature Sensor #3 Low Reference | I | - |
| 23-24 | - | - | - | Not Occupied | - | - |
| 25 | 0.5 | WH/GY | 1786 | Transmission Park/Neutral Signal (1) | I | - |
| 26 | 0.5 | VT/YE | 5985 | Accessory Wakeup Serial Data | I | - |
| 27 | 0.5 | BK/PU | 3661 | Exhaust Gas Temperature Sensor #5 Low Reference | I | - |
| 28 | 0.5 | BK/L-GN | 6281 | Fuel Level Sensor Low Reference | I | - |
| 29 | 0.5 | BN/YE | 3108 | DEF Pressure Sensor Signal | I | - |
| 30 | 0.5 | YE/RD | 3106 | DEF Pressure Sensor 5V Reference | I | - |
| 31 | 0.5 | BK/L-GN | 3107 | DEF Pressure Sensor Low Reference | I | - |
| 32 | - | - | - | Not Occupied | - | - |
| 33 | 0.5 | BN/D-BU | 2926 | Hydrocarbon Injector High Control | I | - |
| 34 | 0.5 | WH/GY | 459 | A/C Compressor Clutch Relay Control | I | - |
| 35 | 0.5 | BK/PU | 3104 | DEF Smart Pump Low Reference | I | - |
| 36 | 0.5 | BK/BN | 5514 | A/C Refrigerant Pressure Sensor Low Reference | I | - |
| 37 | - | - | - | Not Occupied | - | - |
| 38 | 0.5 | D-BU/L-GN | 5377 | Exhaust Gas Temperature Sensor (2) | I | - |
| 39 | 0.5 | L-GN/WH | 1162 | Accelerator Pedal Position Signal (2) | I | - |
| 40 | 0.5 | WH/D-BU | 6289 | Induction Air Temperature Sensor Signal | I | - |
| 41 | 0.5 | D-BU | 6053 | Exhaust Pressure Sensor Signal (1) | I | - |
| 42 | 0.5 | WH/RD | 1164 | Accelerator Pedal Position 5 Volt Reference (1) | I | - |
| 43 | 0.5 | WH/RD | 6054 | Exhaust Pressure Sensor 5 Volt Reference (1) | I | - |
| 44 | 0.5 | BK/YE | 6055 | Exhaust Pressure Sensor Low Reference (1) | I | - |
| 45 | 0.5 | WH | 7494 | High Speed GMLAN Serial Data (-)(3) | I | - |
| 46 | 0.5 | WH | 2501 | High Speed GMLAN Serial Data (-) (1) | I | - |
| 47 | - | - | - | Not Occupied | - | - |

| | | | | | | |
|---|---|---|---|---|---|---|
| 47 | - | - | - | Not Occupied | - | - |
| 48 | 0.5 | VT/L-GN | 439 | Run/Crank Ignition 1 Voltage | I | - |
| 49 | 0.5 | L-GN/WH | 492 | Mass Air Flow Sensor Signal | I | - |
| 50 | 0.75 | BN | 25 | Charge Indicator Control | I | - |
| 51 | 0.5 | BK/PU | 1272 | Accelerator Pedal Position Low Reference (2) | I | - |
| 52 | - | - | - | Not Occupied | - | - |
| 53 | 0.75 | WH/BK | 3102 | DEF Reverting Valve Low Control | I | - |
| 54 | 0.5 | GY | 3103 | DEF Smart Pump Supply Voltage | I | - |
| 55 | 0.5 | BK/D-BU | 1271 | Accelerator Pedal Position Low Reference (1) | I | - |
| 56 | 0.5 | D-BU/GY | 3660 | Exhaust Gas Temperature Sensor #5 Signal | I | - |
| 57 | 0.5 | GY/L-GN | 5378 | Exhaust Gas Temperature Sensor (3) | I | - |
| 58 | 0.5 | D-BU/VT | 1589 | Primary Fuel Level Sensor Signal | I | - |
| 59 | 0.5 | L-GN | 380 | A/C Refrigerant Pressure Sensor Signal | I | - |
| 60 | - | - | - | Not Occupied | - | - |
| 61 | 0.5 | YE/WH | 1161 | Accelerator Pedal Position Signal (1) | I | - |
| 62 | 0.5 | BN/RD | 1274 | Accelerator Pedal Position 5 Volt Reference (2) | I | - |
| 63 | 0.5 | BN/RD | 2700 | A/C Pressure Sensor 5 Volt Reference | I | - |
| 64 | - | - | - | Not Occupied | - | - |
| 65 | 0.5 | D-BU/BK | 7493 | High Speed GMLAN Serial Data (+)(3) | I | - |
| 66 | 0.5 | D-BU | 2500 | High Speed GMLAN Serial Data (+) (1) | I | - |
| 67 | 0.5 | RD/BN | 440 | Battery Positive Voltage | I | - |
| 68 | 0.5 | YE | 5991 | Powertrain Relay Coil Control | I | - |
| 69 | 0.5 | D-BU/VT | 2364 | Cooling Fan Speed Signal | I | - |
| 70 | 0.75 | GY | 23 | Generator Field Duty Cycle Signal | I | - |
| 71 | 0.5 | BK/BN | 6141 | Cooling Fan Speed Low Reference | I | - |
| 72 | 0.5 | BN/VT | 6399 | Replicated TOS Signal | I | - |
| 73 | 2.5 | VT/D-BU | 5290 | Powertrain Main Relay Fused Supply (1) | II | - |

## K20 Engine Control Module X2

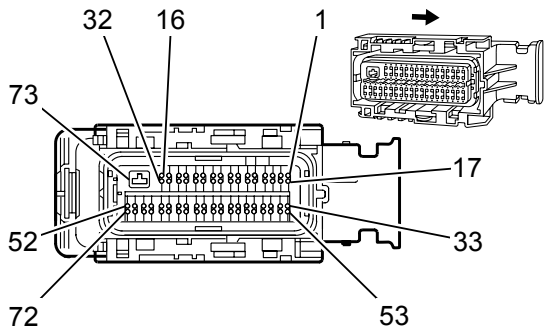


### Connector Part Information

Harness Type: Engine

OEM Connector: 13820450

Service Connector: 19301191

Description: 73-Way F 0.64, 2.8 Series, Sealed (BK)

### *Terminal Part Information*

| Terminal Type ID | Terminated Lead | Diagnostic Test Probe | Terminal Removal Tool | Service Terminal | Tray | Core Crimp | Insulation Crimp |
|---|---|---|---|---|---|---|---|
| I | Not Available | J-35616-64B | J-38125-12A | Not Available | Not Available | Not Available | Not Available |
| II | 13575291 | J-35616-35 (VT) | J-38125-11A | 7116-4152-02 | 9 | A | 5 |

### *K20 Engine Control Module X2*

| Pin | Size | Color | Circuit | Function | Terminal Type ID | Option |
|---|---|---|---|---|---|---|
| 1 | 0.5 | D-BU/VT | 2121 | Ignition Control (1) | I | - |
| 2 | 0.5 | L-GN/YE | 1744 | Fuel Injector Control (1) | I | - |
| 3 | 0.5 | BN/GY | 878 | Fuel Injector Control (8) | I | - |
| 4 | 0.5 | BN/VT | 877 | Fuel Injector Control (7) | I | - |
| 5 | 0.5 | YE/WH | 1745 | Fuel Injector Control (2) | I | - |
| 6 | 0.5 | BN/D-BU | 846 | Fuel Injector Control (6) | I | - |
| 7 | 0.5 | BN/L-GN | 845 | Fuel Injector Control (5) | I | - |
| 8 | 0.5 | BN/YE | 844 | Fuel Injector Control (4) | I | - |
| 9 | 0.5 | BN/VT | 1746 | Fuel Injector Control (3) | I | - |
| 10 | - | - | - | Not Occupied | - | - |
| 11 | 0.5 | VT/BN | 5284 | Camshaft Phaser Intake Solenoid (1) | I | - |
| 12-14 | - | - | - | Not Occupied | - | - |
| 15 | 0.5 | YE | 581 | Throttle Actuator Control Open | I | - |
| 16 | 0.5 | BN/WH | 582 | Throttle Actuator Control Close | I | - |

| | | | | | | |
|---|---|---|---|---|---|---|
| 17 | 0.5 | VT/WH | 2128 | Ignition Control (8) | I | - |
| 18 | 0.5 | YE/D-BU | 2124 | Ignition Control (4) | I | - |
| 19 | 0.5 | BK/GY | 2130 | Ignition Control Low Reference Bank 2 | I | - |
| 20 | 0.5 | BK/PU | 6272 | Crankshaft 60X Sensor Low Reference | I | - |
| 21-23 | - | - | - | Not Occupied | - | - |
| 24 | 0.5 | BK/L-GN | 5301 | Camshaft Position Intake Sensor Low Reference (1) | I | - |
| 25 | 0.5 | BK/PU | 2755 | Oil Pressure Sensor Low Reference | I | - |
| 26-27 | - | - | - | Not Occupied | - | - |
| 28 | 0.75 | VT/D-BU | 5290 | Powertrain Main Relay Fused Supply (1) | I | - |
| 29 | 0.5 | BK/BN | 6753 | Cam Phaser W Return Low Reference | I | - |
| 30-32 | - | - | - | Not Occupied | - | - |
| 33 | 0.5 | L-GN/GY | 2127 | Ignition Control (7) | I | - |
| 34 | 0.5 | D-BU/GY | 2125 | Ignition Control (5) | I | - |
| 35 | 0.5 | BK/D-BU | 2129 | Ignition Control Low Reference Bank 1 | I | - |
| 36 | 0.5 | VT/D-BU | 6270 | Crankshaft 60X Sensor Voltage | I | - |
| 37-39 | - | - | - | Not Occupied | - | - |
| 40 | 0.5 | GY/D-BU | 5300 | Camshaft Position Intake Sensor Supply Voltage (1) | I | - |
| 41 | 0.5 | WH/RD | 2705 | Oil Pressure Sensor 5 Volt Reference | I | - |
| 42 | - | - | - | Not Occupied | - | - |
| 43 | 0.5 | BN/RD | 2701 | Throttle Position Sensor 5 Volt Reference | I | - |
| 44 | 0.5 | BK/BN | 2752 | Throttle Position Sensor Low Reference | I | - |
| 45-46 | - | - | - | Not Occupied | - | - |
| 47 | 0.5 | WH/BK | 3111 | Heated Oxygen Sensor Low Signal Bank 1 Sensor (1) | I | - |
| 48 | 0.5 | YE/WH | 3211 | Heated Oxygen Sensor Low Signal Bank 2 Sensor (1) | I | - |
| 49 | 0.75 | BK/YE | 1716 | Knock Sensor Low Reference (1) | I | - |
| 50 | 0.75 | BK/GY | 2303 | Knock Sensor Low Reference (2) | I | - |
| 51 | - | - | - | Not Occupied | - | - |
| 52 | 0.5 | L-GN/YE | 3212 | Heated Oxygen Sensor Heater Low Control Bank 2 Sensor (1) | I | - |
| 53 | 0.5 | D-BU/WH | 2122 | Ignition Control (2) | I | - |
| 54 | 0.5 | BN/D-BU | 2126 | Ignition Control (6) | I | - |
| 55 | 0.5 | L-GN/D-BU | 2123 | Ignition Control (3) | I | - |

| | | | | | | |
|---|---|---|---|---|---|---|
| 56 | 0.5 | L-GN | 6271 | Crankshaft 60X Sensor Signal | I | - |
| 57-59 | - | - | - | Not Occupied | - | - |
| 60 | 0.5 | YE/VT | 5275 | Camshaft Position Intake Sensor (1) | I | - |
| 61 | 0.5 | YE/BN | 331 | Oil Pressure Sensor Signal | I | - |
| 62 | - | - | - | Not Occupied | - | - |
| 63 | 0.5 | BN/L-GN | 485 | Throttle Position Sensor Signal (1) | I | - |
| 64 | - | - | - | Not Occupied | - | - |
| 65 | 0.5 | BN/D-BU | 486 | Throttle Position Sensor Signal (2) | I | - |
| 66 | - | - | - | Not Occupied | - | - |
| 67 | 0.5 | VT/GY | 3110 | Heated Oxygen Sensor High Signal Bank 1 Sensor (1) | I | - |
| 68 | 0.5 | VT/WH | 3210 | Heated Oxygen Sensor High Signal Bank 2 Sensor (1) | I | - |
| 69 | 0.75 | VT/GY | 496 | Knock Sensor Signal (1) | I | - |
| 70 | 0.75 | WH/GY | 1876 | Knock Sensor Signal (2) | I | - |
| 71 | - | - | - | Not Occupied | - | - |
| 72 | 0.5 | GY/WH | 3113 | Heated Oxygen Sensor Heater Low Control Bank 1 Sensor (1) | I | - |
| 73 | 2.5 | BK/WH | 451 | Signal Ground | II | - |

## K20 Engine Control Module X2

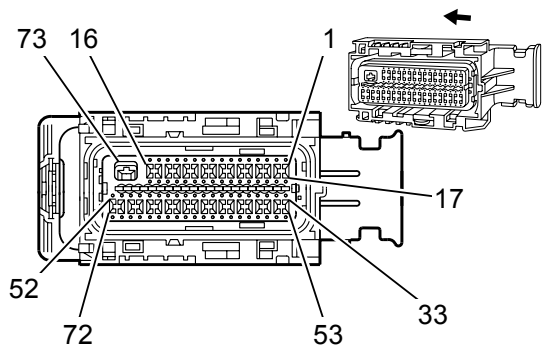


### Connector Part Information

Harness Type: Engine

OEM Connector: 33113542

Service Connector: Not Available

Description: 73-Way F 0.64, 2.8 Series, Sealed (BK with BK Terminal Position Assurance)

Harness Type: Engine

OEM Connector: 13965165

Service Connector: Not Available

Description: 73-Way F 0.64, 2.8 Series, Sealed (BK with BK Terminal Position Assurance)

### *Terminal Part Information*

| Terminal Type ID | Terminated Lead | Diagnostic Test Probe | Terminal Removal Tool | Service Terminal | Tray | Core Crimp | Insulation Crimp |
|---|---|---|---|---|---|---|---|
| I | Not Available | J-35616-64B | J-38125-12A | Not Available | Not Available | Not Available | Not Available |
| II | 13575291 | J-35616-35 (VT) | J-38125-11A | 7116-4152-02 | 9 | A | 5 |

### *K20 Engine Control Module X2*

| Pin | Size | Color | Circuit | Function | Terminal Type ID | Option |
|---|---|---|---|---|---|---|
| 1-2 | - | - | - | Not Occupied | - | - |
| 3 | 0.5 | BK/L-GN | 2919 | Fuel Rail Pressure Sensor Low Reference | I | - |
| 4 | - | - | - | Not Occupied | - | - |
| 5 | 0.5 | GY/BK | 3096 | Output Speed (Digital) 5V Sensor Reference | I | - |
| 6 | 0.5 | VT/WH | 821 | Vehicle Speed Sensor Signal | I | - |
| 7 | 0.5 | BK/L-GN | 822 | Vehicle Speed Sensor Low Reference | I | - |
| 8 | 0.5<br>0.5 | L-GN<br>BN/WH | 3098<br>6354 | Output Speed (Digital) Signal<br>Output Speed High (Replicated TOS) Input Signal | I | - |
| 9 | - | - | - | Not Occupied | - | - |
| 10 | 0.5 | VT/GY | 3110 | Heated Oxygen Sensor High Signal Bank 1 Sensor (1) | I | - |
| 11 | 0.5 | VT/WH | 3210 | Heated Oxygen Sensor High Signal Bank 2 Sensor (1) | I | - |
| 12 | 0.5 | VT/D-BU | 3120 | Heated Oxygen Sensor Low Signal Bank 2 Sensor (1) | I | - |

| | | | | | | |
|---|---|---|---|---|---|---|
| 13 | 0.5 | VT/L-GN | 3220 | Heated Oxygen Sensor High Signal Bank 2 Sensor (2) | I | - |
| 14 | - | - | - | Not Occupied | - | - |
| 15 | 0.5 | GY/D-BU | 7564 | Humidity Sensor Signal | I | - |
| 16 | 0.5 | BN/WH | 582 | Throttle Actuator Control Close | I | - |
| 17 | - | - | - | Not Occupied | - | - |
| 18 | 0.5 | BN/RD | 2917 | Fuel Rail Pressure Sensor (5) Volt Reference | I | - |
| 19 | 0.5 | D-BU/WH | 2918 | Fuel Rail Pressure Sensor Signal | I | - |
| 20 | - | - | - | Not Occupied | - | - |
| 21 | 0.5 | WH/BK | 3097 | Output Speed (Digital) 5V Sensor Return | I | - |
| 22 | - | - | - | Not Occupied | - | - |
| 23 | 0.5 | L-GN/WH | 5007 | Reverse Switch Signal | I | - |
| 24-25 | - | - | - | Not Occupied | - | - |
| 26 | 0.5 | WH/BK | 3111 | Heated Oxygen Sensor Low Signal Bank 1 Sensor (1) | I | - |
| 27 | 0.5 | YE/WH | 3211 | Heated Oxygen Sensor Low Signal Bank 2 Sensor (1) | I | - |
| 28 | 0.5 | WH/YE | 3121 | Heated Oxygen Sensor Low Signal Bank 1 Sensor (2) | I | - |
| 29 | 0.5 | YE/D-BU | 3221 | Heated Oxygen Sensor Low Signal Bank 2 Sensor (2) | I | - |
| 30-31 | - | - | - | Not Occupied | - | - |
| 32 | 0.5 | YE | 581 | Throttle Actuator Control Open | I | - |
| 33 | - | - | - | Not Occupied | - | - |
| 34 | 0.5 | BN/RD | 2701 | Throttle Position Sensor 5 Volt Reference | I | - |
| 35 | - | - | - | Not Occupied | - | - |
| 36 | 0.75 | VT/GY | 496 | Knock Sensor Signal (1) | I | - |
| 37 | 0.75 | WH/GY | 1876 | Knock Sensor Signal (2) | I | - |
| 38-39 | - | - | - | Not Occupied | - | - |
| 40 | 0.5 | VT/D-BU | 6091 | Crankshaft Position Sensor Replicated Signal | I | - |
| 41 | 0.5 | GY/WH | 3113 | Heated Oxygen Sensor Heater Low Control Bank 1 Sensor (1) | I | - |
| 42 | 0.5 | GY/WH | 3122 | Heated Oxygen Sensor Heater Low Control Bank 1 Sensor (2) | I | - |
| 43 | 0.5 | L-GN/WH | 432 | Manifold Absolute Pressure Sensor Signal | I | - |
| 44 | 0.5 | GY/RD | 2704 | Manifold Absolute Pressure Sensor 5 Volt Reference | I | - |
| 45-48 | - | - | - | Not Occupied | - | - |
| 49 | 0.5 | WH/D-BU | 6289 | Induction Air Temperature Sensor Signal | I | - |

| | | | | | | |
|---|---|---|---|---|---|---|
| 50 | - | - | - | Not Occupied | - | - |
| 51 | 0.5 | L-GN/D-BU | 428 | EVAP Canister Purge Solenoid Control | I | - |
| 52 | 0.5 | L-GN/WH | 492 | Mass Air Flow Sensor Signal | I | - |
| 53 | 0.5 | BN | 25 | Charge Indicator Control | I | - |
| 54 | 0.5 | BK/BN | 2752 | Throttle Position Sensor Low Reference | I | - |
| 55 | 0.5 | GY | 23 | Generator Field Duty Cycle Signal | I | - |
| 56 | 0.75 | BK/YE | 1716 | Knock Sensor Low Reference (1) | I | - |
| 57 | 0.75 | BK/GY | 2303 | Knock Sensor Low Reference (2) | I | - |
| 58 | 0.5 | WH/GY | 1786 | Transmission Park/Neutral Signal (1) | I | - |
| 59 | 0.5 | D-BU | 179 | Oil Pump Command Signal | I | - |
| 60 | 0.5 | BN/L-GN | 1174 | Oil Level Switch Signal | I | - |
| 61 | 0.5 | L-GN/YE | 3212 | Heated Oxygen Sensor Heater Low Control Bank 2 Sensor (1) | I | - |
| 62 | 0.5 | WH/BN | 3223 | Heated Oxygen Sensor Heater Low Control Bank 2 Sensor (2) | I | - |
| 63 | 0.5 | BK/L-GN | 469 | Manifold Absolute Pressure Sensor Low Reference | I | - |
| 64 | - | - | - | Not Occupied | - | - |
| 65 | 0.5 | BK/D-BU | 61 | Outside Ambient Temperature Sensor Low Reference | I | - |
| 66-68 | - | - | - | Not Occupied | - | - |
| 69 | 0.5 | WH/YE | 3202 | Throttle Inlet Absolute Pressure Sensor 5V Return | I | - |
| 70 | 0.5 | D-BU/WH | 3630 | Throttle Position Sensor (SENT1) Signal | I | - |
| 71-72 | - | - | - | Not Occupied | - | - |
| 73 | 2.5 | BK/WH | 451 | Signal Ground | II | - |

## K20 Engine Control Module X2 (L96)

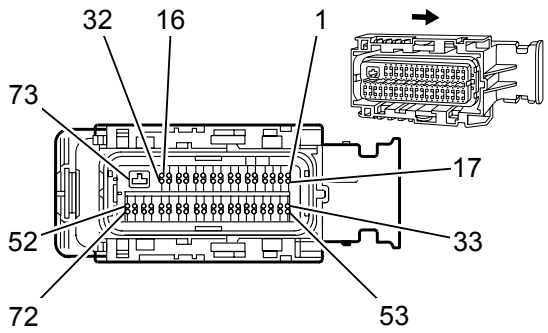


### Connector Part Information

Harness Type: Engine

OEM Connector: 13820450

Service Connector: 13505791

Description: 73-Way F 0.64, 2.8 Series, Sealed (BK)

### *Terminal Part Information*

| Terminal Type ID | Terminated Lead | Diagnostic Test Probe | Terminal Removal Tool | Service Terminal | Tray | Core Crimp | Insulation Crimp |
|---|---|---|---|---|---|---|---|
| I | Pending | J-35616-64B | J-38125-12A | Not Available | Not Available | Not Available | Not Available |
| II | 13575291 | J-35616-35 (VT) | J-38125-11A | 7116-4152-02 | 9 | A | 5 |

### *K20 Engine Control Module X2 (L96)*

| Pin | Size | Color | Circuit | Function | Terminal Type ID | Option |
|---|---|---|---|---|---|---|
| 1 | 0.5 | D-BU/VT | 2121 | Ignition Control (1) | I | - |
| 2 | 0.5 | L-GN/YE | 1744 | Fuel Injector Control (1) | I | - |
| 3 | 0.5 | BN/GY | 878 | Fuel Injector Control (8) | I | - |
| 4 | 0.5 | BN/VT | 877 | Fuel Injector Control (7) | I | - |
| 5 | 0.5 | YE/WH | 1745 | Fuel Injector Control (2) | I | - |
| 6 | 0.5 | BN/D-BU | 846 | Fuel Injector Control (6) | I | - |
| 7 | 0.5 | BN/L-GN | 845 | Fuel Injector Control (5) | I | - |
| 8 | 0.5 | BN/YE | 844 | Fuel Injector Control (4) | I | - |
| 9 | 0.5 | BN/VT | 1746 | Fuel Injector Control (3) | I | - |
| 10 | - | - | - | Not Occupied | - | - |
| 11 | 0.5 | VT/BN | 5284 | Camshaft Phaser Intake Solenoid (1) | I | - |
| 12-14 | - | - | - | Not Occupied | - | - |
| 15 | 0.5 | YE | 581 | Throttle Actuator Control Open | I | - |
| 16 | 0.5 | BN/WH | 582 | Throttle Actuator Control Close | I | - |

| | | | | | | |
|---|---|---|---|---|---|---|
| 17 | 0.5 | VT/WH | 2128 | Ignition Control (8) | I | - |
| 18 | 0.5 | YE/D-BU | 2124 | Ignition Control (4) | I | - |
| 19 | 0.5 | BK/GY | 2130 | Ignition Control Low Reference Bank 2 | I | - |
| 20 | 0.5 | BK/PU | 6272 | Crankshaft 60X Sensor Low Reference | I | - |
| 21-23 | - | - | - | Not Occupied | - | - |
| 24 | 0.5 | BK/L-GN | 5301 | Camshaft Position Intake Sensor Low Reference (1) | I | - |
| 25 | 0.5 | BK/PU | 2755 | Oil Pressure Sensor Low Reference | I | - |
| 26-27 | - | - | - | Not Occupied | - | - |
| 28 | 0.75 | VT/D-BU | 5290 | Powertrain Main Relay Fused Supply (1) | I | - |
| 29 | 0.5 | BK/BN | 6753 | Cam Phaser W Return Low Reference | I | - |
| 30-32 | - | - | - | Not Occupied | - | - |
| 33 | 0.5 | L-GN/GY | 2127 | Ignition Control (7) | I | - |
| 34 | 0.5 | D-BU/GY | 2125 | Ignition Control (5) | I | - |
| 35 | 0.5 | BK/D-BU | 2129 | Ignition Control Low Reference Bank 1 | I | - |
| 36 | 0.5 | VT/D-BU | 6270 | Crankshaft 60X Sensor Voltage | I | - |
| 37-39 | - | - | - | Not Occupied | - | - |
| 40 | 0.5 | GY/D-BU | 5300 | Camshaft Position Intake Sensor Supply Voltage (1) | I | - |
| 41 | 0.5 | WH/RD | 2705 | Oil Pressure Sensor 5 Volt Reference | I | - |
| 42 | - | - | - | Not Occupied | - | - |
| 43 | 0.5 | BN/RD | 2701 | Throttle Position Sensor 5 Volt Reference | I | - |
| 44 | 0.5 | BK/BN | 2752 | Throttle Position Sensor Low Reference | I | - |
| 45-46 | - | - | - | Not Occupied | - | - |
| 47 | 0.5 | WH/BK | 3111 | Heated Oxygen Sensor Low Signal Bank 1 Sensor (1) | I | - |
| 48 | 0.5 | YE/WH | 3211 | Heated Oxygen Sensor Low Signal Bank 2 Sensor (1) | I | - |
| 49 | 0.75 | BK/YE | 1716 | Knock Sensor Low Reference (1) | I | - |
| 50 | 0.75 | BK/GY | 2303 | Knock Sensor Low Reference (2) | I | - |
| 51 | - | - | - | Not Occupied | - | - |
| 52 | 0.5 | L-GN/YE | 3212 | Heated Oxygen Sensor Heater Low Control Bank 2 Sensor (1) | I | - |
| 53 | 0.5 | D-BU/WH | 2122 | Ignition Control (2) | I | - |
| 54 | 0.5 | BN/D-BU | 2126 | Ignition Control (6) | I | - |
| 55 | 0.5 | L-GN/D-BU | 2123 | Ignition Control (3) | I | - |

| | | | | | | |
|---|---|---|---|---|---|---|
| 56 | 0.5 | L-GN | 6271 | Crankshaft 60X Sensor Signal | I | - |
| 57-59 | - | - | - | Not Occupied | - | - |
| 60 | 0.5 | YE/VT | 5275 | Camshaft Position Intake Sensor (1) | I | - |
| 61 | 0.5 | YE/BN | 331 | Oil Pressure Sensor Signal | I | - |
| 62 | - | - | - | Not Occupied | - | - |
| 63 | 0.5 | BN/L-GN | 485 | Throttle Position Sensor Signal (1) | I | - |
| 64 | - | - | - | Not Occupied | - | - |
| 65 | 0.5 | BN/D-BU | 486 | Throttle Position Sensor Signal (2) | I | - |
| 66 | - | - | - | Not Occupied | - | - |
| 67 | 0.5 | VT/GY | 3110 | Heated Oxygen Sensor High Signal Bank 1 Sensor (1) | I | - |
| 68 | 0.5 | VT/WH | 3210 | Heated Oxygen Sensor High Signal Bank 2 Sensor (1) | I | - |
| 69 | 0.75 | VT/GY | 496 | Knock Sensor Signal (1) | I | - |
| 70 | 0.75 | WH/GY | 1876 | Knock Sensor Signal (2) | I | - |
| 71 | - | - | - | Not Occupied | - | - |
| 72 | 0.5 | GY/WH | 3113 | Heated Oxygen Sensor Heater Low Control Bank 1 Sensor (1) | I | - |
| 73 | 2.5 | BK/WH | 451 | Signal Ground | II | - |

## K20 Engine Control Module X2 (LML)

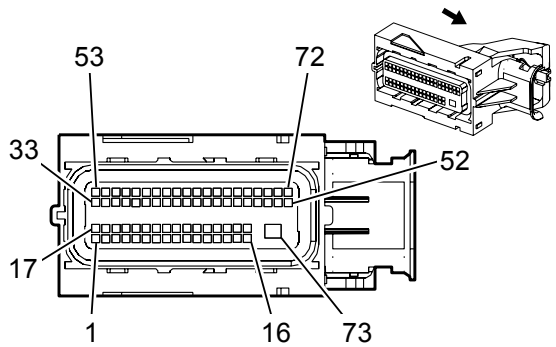


### Connector Part Information

Harness Type: Engine

OEM Connector: 12603596

Service Connector: 13574947

Description: 73-Way F 0.64, 2.8 Series, Sealed (BK with BK Terminal Position Assurance)

### *Terminal Part Information*

| Terminal Type ID | Terminated Lead | Diagnostic Test Probe | Terminal Removal Tool | Service Terminal | Tray | Core Crimp | Insulation Crimp |
|---|---|---|---|---|---|---|---|
| I | Pending | Pending | Pending | Not Available | Not Available | Not Available | Not Available |

### *K20 Engine Control Module X2 (LML)*

| Pin | Size | Color | Circuit | Function | Terminal Type ID | Option |
|---|---|---|---|---|---|---|
| 1 | 0 | L-GN | 497 | Fuel Pump Secondary Relay Control | I | LML |
| 2 | - | - | - | Not Occupied | - | - |
| 3 | 0 | YE | 2928 | Fuel Metering Valve High Control | I | LML |
| 4 | 0.8 | VT/WH | 2530 | Fuel Rail Pressure Solenoid Supply Voltage | I | LML |
| 5 | 0 | BK | 2929 | Fuel Metering Valve Low Control | I | LML |
| 6 | 0.5 | WH | 5931 | Variable Nozzle Turbo Solenoid Low Signal | I | LML |
| 7 | 0 | | 2752 | Throttle Position Sensor Low Reference | I | LML |
| 8 | 0 | | 2753 | Exhaust Gas Recirculation Sensor Low Reference | I | LML |
| 9 | 0 | BR | 1174 | Oil Level Switch Signal | I | LML |
| 10 | 0 | BR | 6782 | Exhaust Gas Temperature Sensor 1 Low Reference | I | LML |
| 11 | 0 | | 3653 | EGR Cooler Bypass Position Sensor Low Reference | I | LML |
| 12 | - | - | - | Not Occupied | - | - |
| 13 | 0.8 | BR/WH | 4901 | Direct Fuel Injector (DFI) High Voltage Supply Cylinder 1 | I | LML |
| 14 | 0.8 | WH | 4907 | Direct Fuel Injector (DFI) High Voltage Supply Cylinder 7 | I | LML |
| 15 | 0.8 | L-BU | 4804 | Direct Fuel Injector (DFI) High Voltage Control Cylinder 4 | I | LML |

| | | | | | | |
|---|---|---|---|---|---|---|
| 16 | 0.8 | BR | 4801 | Direct Fuel Injector (DFI) High Voltage Control Cylinder 1 | I | LML |
| 17 | 0.8 | BK/WH | 451 | Signal Ground | I | LML |
| 18 | 0.8 | BK/WH | 451 | Signal Ground | I | LML |
| 19 | 0.8 | YE | 2834 | Fuel Rail Pressure Solenoid Low Reference | I | LML |
| 20 | - | - | - | Not Occupied | - | - |
| 21 | 0.8 | BK/WH | 451 | Signal Ground | I | LML |
| 22 | 0.5 | BU | 5930 | Variable Nozzle Turbo Solenoid High Signal | I | LML |
| 23-24 | - | - | - | Not Occupied | - | - |
| 25 | 0 | OG/BK | 5929 | Variable Nozzle Turbo Position Sensor Low Reference | I | LML |
| 26 | 0 | L-BU/BK | 6813 | Coolant Temperature Sensor #2 Low Reference | I | LML |
| 27 | 0 | YE/BK | 1827 | Vehicle Speed Signal | I | LML |
| 28 | - | - | - | Not Occupied | - | - |
| 29 | 0.8 | L-BU/WH | 4904 | Direct Fuel Injector (DFI) High Voltage Supply Cylinder 4 | I | LML |
| 30 | 0.8 | VT/WH | 4906 | Direct Fuel Injector (DFI) High Voltage Supply Cylinder 6 | I | LML |
| 31 | 0.8 | | 4807 | Direct Fuel Injector (DFI) High Voltage Control Cylinder 7 | I | LML |
| 32 | 0.8 | VT | 4806 | Direct Fuel Injector (DFI) High Voltage Control Cylinder 6 | I | LML |
| 33-40 | - | - | - | Not Occupied | - | - |
| 41 | 0 | BK | 2755 | Oil Pressure Sensor Low Reference | I | LML |
| 42-46 | - | - | - | Not Occupied | - | - |
| 47 | 0 | GY | 2702 | Exhaust Gas Recirculation 5 Volt Reference (2) | I | LML |
| 48 | 0 | GY | 3652 | EGR Cooler Bypass Position Sensor 5V Reference | I | LML |
| 49-65 | - | - | - | Not Occupied | - | - |
| 66 | 0 | | 5928 | Variable Nozzle Turbo Position Sensor Voltage Reference | I | LML |
| 67 | 0 | VT/WH | 6270 | Crankshaft 60X Sensor Voltage | I | LML |
| 68-72 | - | - | - | Not Occupied | - | - |
| 73 | 3 | BK/WH | 451 | Signal Ground | I | LML |

## K20 Engine Control Module X3

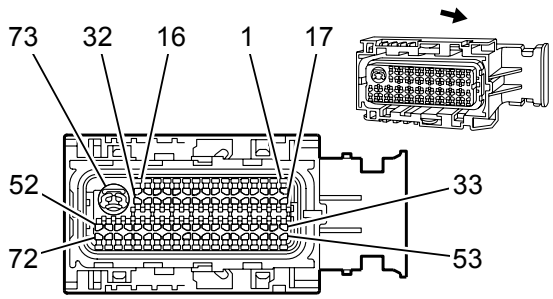


### Connector Part Information

Harness Type: Engine

OEM Connector: 33113547

Service Connector: Not Available

Description: 73-Way F 0.64, 2.8 Series, Sealed (BK with GY Terminal Position Assurance)

Harness Type: Engine

OEM Connector: 13965166

Service Connector: Not Available

Description: 73-Way F 0.64, 2.8 Series, Sealed (BK with GY Terminal Position Assurance)

### *Terminal Part Information*

| Terminal Type ID | Terminated Lead | Diagnostic Test Probe | Terminal Removal Tool | Service Terminal | Tray | Core Crimp | Insulation Crimp |
|---|---|---|---|---|---|---|---|
| I | Not Available | J-35616-64B | J-38125-12A | Not Available | Not Available | Not Available | Not Available |
| II | 13575291 | J-35616-35 (VT) | J-38125-11A | 7116-4152-02 | 9 | A | 5 |

### *K20 Engine Control Module X3*

| Pin | Size | Color | Circuit | Function | Terminal Type ID | Option |
|---|---|---|---|---|---|---|
| 1 | 0.5 | YE/BN | 331 | Oil Pressure Sensor Signal | I | - |
| 2 | 0.5 | WH/RD | 2705 | Oil Pressure Sensor 5 Volt Reference | I | - |
| 3 | 0.5 | BN/YE | 2161 | Fuel Rail Pressure Sensor #2 Signal | I | - |
| 4-7 | - | - | - | Not Occupied | - | - |
| 8 | 0.5 | D-BU | 410 | Engine Coolant Temperature Sensor Signal | I | - |
| 9 | - | - | - | Not Occupied | - | - |
| 10 | 0.5 | VT/D-BU | 6270 | Crankshaft 60X Sensor Voltage | I | - |
| 11 | 0.5 | L-GN/D-BU | 2123 | Ignition Control (3) | I | - |
| 12 | 0.5 | YE/D-BU | 2124 | Ignition Control (4) | I | - |
| 13 | 0.5<br>0.5 | D-BU/WH<br>D-BU/GY | 2122<br>2125 | Ignition Control (2)<br>Ignition Control (5) | I | - |
| 14 | 0.5<br>0.5 | L-GN/D-BU<br>BN/D-BU | 2123<br>2126 | Ignition Control (3)<br>Ignition Control (6) | I | - |

| | | | | | | |
|---|---|---|---|---|---|---|
| | 0.5 | BN/D-BU | 2126 | Ignition Control (6) | | |
| 15 | 0.5 | BK/GY | 2130 | Ignition Control Low Reference Bank 2 | I | - |
| 16 | 0.75 | YE | 7301 | High Pressure Fuel Pump Actuator High - Control | I | - |
| 17 | 0.5 | BK/PU | 2755 | Oil Pressure Sensor Low Reference | I | - |
| 18-23 | - | - | - | Not Occupied | - | - |
| 24 | 0.5 | BK/BN | 2761 | Coolant Temperature Sensor Low Reference | I | - |
| 25 | 0.5 | BK/PU | 6272 | Crankshaft 60X Sensor Low Reference | I | - |
| 26 | 0.5 | L-GN | 6271 | Crankshaft 60X Sensor Signal | I | - |
| 27 | 0.5<br>0.5 | YE/D-BU<br>D-BU/WH | 2124<br>2122 | Ignition Control (4)<br>Ignition Control (2) | I | - |
| 28 | 0.5<br>0.5 | D-BU/GY<br>L-GN/GY | 2125<br>2127 | Ignition Control (5)<br>Ignition Control (7) | I | - |
| 29 | 0.5<br>0.5 | BN/D-BU<br>VT/WH | 2126<br>2128 | Ignition Control (6)<br>Ignition Control (8) | I | - |
| 30 | 0.5 | D-BU/VT | 2121 | Ignition Control (1) | I | - |
| 31 | 0.5 | BK/D-BU | 2129 | Ignition Control Low Reference Bank 1 | I | - |
| 32 | 0.75 | VT/BK | 7300 | High Pressure Fuel Pump Actuator Low - Control | I | - |
| 33 | 0.5 | YE/VT | 5275 | Camshaft Position Intake Sensor (1) | I | - |
| 34 | 0.5 | GY/D-BU | 5300 | Camshaft Position Intake Sensor Supply Voltage (1) | I | - |
| 35-38 | - | - | - | Not Occupied | - | - |
| 39 | 0.5 | VT/BN | 5284 | Camshaft Phaser Intake Solenoid (1) | I | - |
| 40-42 | - | - | - | Not Occupied | - | - |
| 43 | 0.5 | GY | 5493 | Cylinder Shutoff Solenoid Control (3) | I | - |
| 44 | 0.5 | YE/D-BU | 5494 | Cylinder Shutoff Solenoid Control (4) | I | - |
| 45 | 0.75 | GY/D-BU | 4804 | Direct Fuel Injector (DFI) High Voltage Control Cylinder 4 | I | - |
| 46 | 0.75<br>0.75 | GY/D-BU<br>D-BU | 4804<br>4802 | Direct Fuel Injector (DFI) High Voltage Control Cylinder 4<br>Direct Fuel Injector (DFI) High Voltage Control Cylinder 2 | I | - |
| 47 | 0.75<br>0.75 | L-GN<br>PU/L-GN | 4803<br>4806 | Direct Fuel Injector (DFI) High Voltage Control Cylinder 3<br>Direct Fuel Injector (DFI) High Voltage Control Cylinder 6 | I | - |
| 48 | 0.75<br>0.75 | PU/L-GN<br>GY | 4806<br>4808 | Direct Fuel Injector (DFI) High Voltage Control Cylinder 6<br>Direct Fuel Injector (DFI) High Voltage Control Cylinder 8 | I | - |
| 49 | 0.75 | L-GN | 4803 | Direct Fuel Injector (DFI) High Voltage Control Cylinder 3 | I | - |
| 50 | 0.75<br>0.75 | WH/L-GN<br>YE/GY | 4805<br>4807 | Direct Fuel Injector (DFI) High Voltage Control Cylinder 5<br>Direct Fuel Injector (DFI) High Voltage Control Cylinder 7 | I | - |

| | | | | | | |
|---|---|---|---|---|---|---|
| | 0.75 | YE/GY | 4807 | Direct Fuel Injector (DFI) High Voltage Control Cylinder 7 | | |
| 51 | 0.75<br>0.75 | D-BU<br>WH/L-GN | 4802<br>4805 | Direct Fuel Injector (DFI) High Voltage Control Cylinder 2<br>Direct Fuel Injector (DFI) High Voltage Control Cylinder 5 | I | - |
| 52 | 0.75 | BN | 4801 | Direct Fuel Injector (DFI) High Voltage Control Cylinder 1 | I | - |
| 53 | 0.5 | BK/L-GN | 5301 | Camshaft Position Intake Sensor Low Reference (1) | I | - |
| 54-58 | - | - | - | Not Occupied | - | - |
| 59 | 0.5 | BK/BN | 6753 | Cam Phaser W Return Low Reference | I | - |
| 60-62 | - | - | - | Not Occupied | - | - |
| 63 | 0.5 | D-BU | 5491 | Cylinder Shutoff Solenoid Control (1) | I | - |
| 64 | 0.5 | L-GN | 5492 | Cylinder Shutoff Solenoid Control (2) | I | - |
| 65 | 0.75 | D-BU/WH | 4904 | Direct Fuel Injector (DFI) High Voltage Supply Cylinder 4 | I | - |
| 66 | 0.75<br>0.75 | D-BU/WH<br>D-BU/YE | 4904<br>4902 | Direct Fuel Injector (DFI) High Voltage Supply Cylinder 4<br>Direct Fuel Injector (DFI) High Voltage Supply Cylinder 2 | I | - |
| 67 | 0.75<br>0.75 | L-GN/BK<br>VT | 4903<br>4906 | Direct Fuel Injector (DFI) High Voltage Supply Cylinder 3<br>Direct Fuel Injector (DFI) High Voltage Supply Cylinder 6 | I | - |
| 68 | 0.75<br>0.75 | VT<br>GY/D-BU | 4906<br>4908 | Direct Fuel Injector (DFI) High Voltage Supply Cylinder 6<br>Direct Fuel Injector (DFI) High Voltage Supply Cylinder 8 | I | - |
| 69 | 0.75 | L-GN/BK | 4903 | Direct Fuel Injector (DFI) High Voltage Supply Cylinder 3 | I | - |
| 70 | 0.75<br>0.75 | L-GN/WH<br>WH/YE | 4905<br>4907 | Direct Fuel Injector (DFI) High Voltage Supply Cylinder 5<br>Direct Fuel Injector (DFI) High Voltage Supply Cylinder 7 | I | - |
| 71 | 0.75<br>0.75 | D-BU/YE<br>L-GN/WH | 4902<br>4905 | Direct Fuel Injector (DFI) High Voltage Supply Cylinder 2<br>Direct Fuel Injector (DFI) High Voltage Supply Cylinder 5 | I | - |
| 72 | 0.75 | BN/WH | 4901 | Direct Fuel Injector (DFI) High Voltage Supply Cylinder 1 | I | - |
| 73 | 2.5 | BK/WH | 451 | Signal Ground | II | - |

## K20 Engine Control Module X3

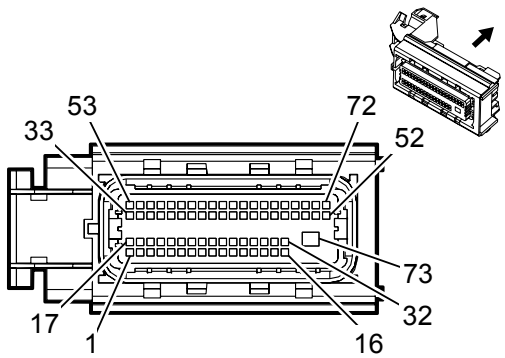


### Connector Part Information

Harness Type: Engine

OEM Connector: 13820451

Service Connector: 19260918

Description: 73-Way F 0.64, 2.8 Series, Sealed (BK with GY Terminal Position Assurance)

### *Terminal Part Information*

| Terminal Type ID | Terminated Lead | Diagnostic Test Probe | Terminal Removal Tool | Service Terminal | Tray | Core Crimp | Insulation Crimp |
|---|---|---|---|---|---|---|---|
| I | Not Available | J-35616-64B | J-38125-12A | Not Available | Not Available | Not Available | Not Available |

### *K20 Engine Control Module X3*

| Pin | Size | Color | Circuit | Function | Terminal Type ID | Option |
|---|---|---|---|---|---|---|
| 1 | 0.5 | L-GN/WH | 5007 | Reverse Switch Signal | I | - |
| 2-9 | - | - | - | Not Occupied | - | - |
| 10 | 0.5 | L-GN/D-BU | 428 | EVAP Canister Purge Solenoid Control | I | - |
| 11-15 | - | - | - | Not Occupied | - | - |
| 16 | 0.5 | WH/BN | 3223 | Heated Oxygen Sensor Heater Low Control Bank 2 Sensor (2) | I | - |
| 17 | 0.5 | GY | 23 | Generator Field Duty Cycle Signal | I | - |
| 18-21 | - | - | - | Not Occupied | - | - |
| 22 | 0.5<br>0.5 | BK/BN<br>BK/GY | 5360<br>6110 | Brake Apply Sensor Low Reference<br>Clutch Apply Sensor Low Reference | I | - |
| 23-26 | - | - | - | Not Occupied | - | - |
| 27 | 0.5 | BK/L-GN | 6281 | Fuel Level Sensor Low Reference | I | - |
| 28 | 0.5 | GY/RD | 2704 | Manifold Absolute Pressure Sensor 5 Volt Reference | I | - |
| 29 | 0.5 | BK/L-GN | 469 | Manifold Absolute Pressure Sensor Low Reference | I | - |
| 30 | 0.5 | BK/BN | 2761 | Coolant Temperature Sensor Low Reference | I | - |
| 31 | - | - | - | Not Occupied | - | - |
| 32 | 0.5 | GY/WH | 3122 | Heated Oxygen Sensor Heater Low Control Bank 1 Sensor (2) | I | - |

| | | | | | | |
|---|---|---|---|---|---|---|
| 32 | 0.5 | GY/WH | 3122 | Heated Oxygen Sensor Heater Low Control Bank 1 Sensor (2) | I | - |
| 33-37 | - | - | - | Not Occupied | - | - |
| 38 | 0.5<br>0.5 | WH<br>GY/RD | 5359<br>6109 | Brake Apply Sensor Supply Voltage<br>Clutch Apply Sensor Voltage Reference | I | - |
| 39-42 | - | - | - | Not Occupied | - | - |
| 43 | 0.5 | YE/RD | 2709 | Fuel Tank Pressure Sensor 5 Volt Reference | I | - |
| 44 | 0.5 | D-BU/WH | 1937 | Secondary Fuel Level Sensor Signal | I | - |
| 45 | 0.5 | L-GN/WH | 432 | Manifold Absolute Pressure Sensor Signal | I | - |
| 46 | 0.5 | D-BU | 410 | Engine Coolant Temperature Sensor Signal | I | - |
| 47 | - | - | - | Not Occupied | - | - |
| 48 | 0.5 | VT/WH | 821 | Vehicle Speed Sensor Signal | I | - |
| 49 | 0.5 | BK/L-GN | 822 | Vehicle Speed Sensor Low Reference | I | - |
| 50-54 | - | - | - | Not Occupied | - | - |
| 55 | 0.5 | BN/WH | 6354 | Output Speed High (Replicated TOS) Input Signal | I | - |
| 56-57 | - | - | - | Not Occupied | - | - |
| 58 | 0.5<br>0.5 | D-BU/YE<br>YE | 5361<br>6111 | Brake Apply Sensor Signal<br>Clutch Apply Sensor Signal | I | - |
| 59-62 | - | - | - | Not Occupied | - | - |
| 63 | 0.5 | D-BU/WH | 890 | Fuel Tank Pressure Sensor Signal | I | - |
| 64 | 0.5 | D-BU/VT | 1589 | Primary Fuel Level Sensor Signal | I | - |
| 65 | 0.5 | VT/L-GN | 3220 | Heated Oxygen Sensor High Signal Bank 2 Sensor (2) | I | - |
| 66 | 0.5 | YE/D-BU | 3221 | Heated Oxygen Sensor Low Signal Bank 2 Sensor (2) | I | - |
| 67 | 0.5 | VT/D-BU | 3120 | Heated Oxygen Sensor High Signal Bank 1 Sensor (2) | I | - |
| 68 | 0.5 | WH/YE | 3121 | Heated Oxygen Sensor Low Signal Bank 1 Sensor (2) | I | - |
| 69-73 | - | - | - | Not Occupied | - | - |

## K20 Engine Control Module X3 (L96)

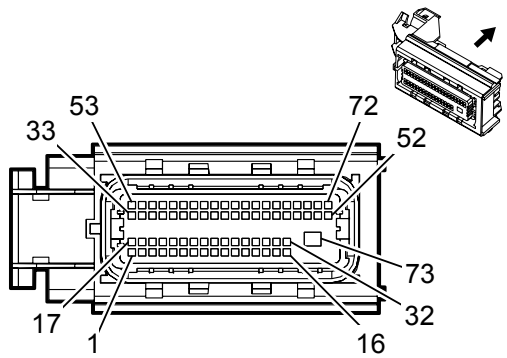


### Connector Part Information

Harness Type: Engine

OEM Connector: 13820451

Service Connector: 13587276

Description: 73-Way F 0.64, 2.8 Series, Sealed (BK with GY Terminal Position Assurance)

### *Terminal Part Information*

| Terminal Type ID | Terminated Lead | Diagnostic Test Probe | Terminal Removal Tool | Service Terminal | Tray | Core Crimp | Insulation Crimp |
|---|---|---|---|---|---|---|---|
| I | Pending | J-35616-64B | J-38125-12A | Not Available | Not Available | Not Available | Not Available |

### *K20 Engine Control Module X3 (L96)*

| Pin | Size | Color | Circuit | Function | Terminal Type ID | Option |
|---|---|---|---|---|---|---|
| 1 | 0.5 | L-GN/WH | 5007 | Reverse Switch Signal | I | - |
| 2-9 | - | - | - | Not Occupied | - | - |
| 10 | 0.5 | L-GN/D-BU | 428 | EVAP Canister Purge Solenoid Control | I | - |
| 11-15 | - | - | - | Not Occupied | - | - |
| 16 | 0.5 | WH/BN | 3223 | Heated Oxygen Sensor Heater Low Control Bank 2 Sensor (2) | I | - |
| 17 | 0.5 | GY | 23 | Generator Field Duty Cycle Signal | I | - |
| 18-21 | - | - | - | Not Occupied | - | - |
| 22 | 0.5<br>0.5 | BK/GY<br>BK/BN | 6110<br>5360 | Clutch Apply Sensor Low Reference<br>Brake Apply Sensor Low Reference | I | - |
| 23-26 | - | - | - | Not Occupied | - | - |
| 27 | 0.5 | BK/L-GN | 6281 | Fuel Level Sensor Low Reference | I | - |
| 28 | 0.5 | GY/RD | 2704 | Manifold Absolute Pressure Sensor 5 Volt Reference | I | - |
| 29 | 0.5 | BK/L-GN | 469 | Manifold Absolute Pressure Sensor Low Reference | I | - |
| 30 | 0.5 | BK/BN | 2761 | Coolant Temperature Sensor Low Reference | I | - |
| 31 | - | - | - | Not Occupied | - | - |
| 32 | 0.5 | GY/WH | 3122 | Heated Oxygen Sensor Heater Low Control Bank 1 Sensor (2) | I | - |

| | | | | | | |
|---|---|---|---|---|---|---|
| 32 | 0.5 | GY/WH | 3122 | Heated Oxygen Sensor Heater Low Control Bank 1 Sensor (2) | I | - |
| 33-37 | - | - | - | Not Occupied | - | - |
| 38 | 0.5<br>0.5 | WH<br>GY/RD | 5359<br>6109 | Brake Apply Sensor Supply Voltage<br>Clutch Apply Sensor Voltage Reference | I | - |
| 39-42 | - | - | - | Not Occupied | - | - |
| 43 | 0.5 | YE/RD | 2709 | Fuel Tank Pressure Sensor 5 Volt Reference | I | - |
| 44 | 0.5 | D-BU/WH | 1937 | Secondary Fuel Level Sensor Signal | I | - |
| 45 | 0.5 | L-GN/WH | 432 | Manifold Absolute Pressure Sensor Signal | I | - |
| 46 | 0.5 | D-BU | 410 | Engine Coolant Temperature Sensor Signal | I | - |
| 47 | - | - | - | Not Occupied | - | - |
| 48 | 0.5 | VT/WH | 821 | Vehicle Speed Sensor Signal | I | - |
| 49 | 0.5 | BK/L-GN | 822 | Vehicle Speed Sensor Low Reference | I | - |
| 50-54 | - | - | - | Not Occupied | - | - |
| 55 | 0.5 | BN/WH | 6354 | Output Speed High (Replicated TOS) Input Signal | I | - |
| 56-57 | - | - | - | Not Occupied | - | - |
| 58 | 0.5<br>0.5 | YE<br>D-BU/YE | 6111<br>5361 | Clutch Apply Sensor Signal<br>Brake Apply Sensor Signal | I | - |
| 59-62 | - | - | - | Not Occupied | - | - |
| 63 | 0.5 | D-BU/WH | 890 | Fuel Tank Pressure Sensor Signal | I | - |
| 64 | 0.5 | D-BU/VT | 1589 | Primary Fuel Level Sensor Signal | I | - |
| 65 | 0.5 | VT/L-GN | 3220 | Heated Oxygen Sensor High Signal Bank 2 Sensor (2) | I | - |
| 66 | 0.5 | YE/D-BU | 3221 | Heated Oxygen Sensor Low Signal Bank 2 Sensor (2) | I | - |
| 67 | 0.5 | VT/D-BU | 3120 | Heated Oxygen Sensor High Signal Bank 1 Sensor (2) | I | - |
| 68 | 0.5 | WH/YE | 3121 | Heated Oxygen Sensor Low Signal Bank 1 Sensor (2) | I | - |
| 69-73 | - | - | - | Not Occupied | - | - |

## K20 Engine Control Module X3 (LML)

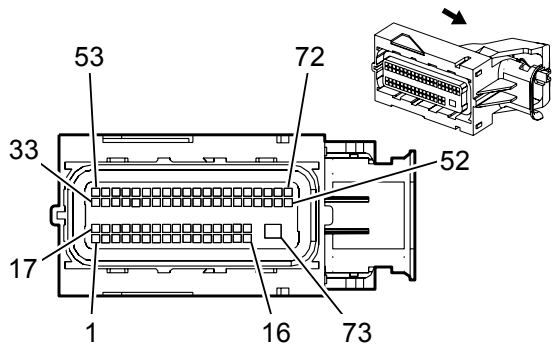


### Connector Part Information

Harness Type: Engine

OEM Connector: 12603597

Service Connector: 13574948

Description: 73-Way F 0.64, 2.8 Series, Sealed (BK with GY Terminal Position Assurance)

### *Terminal Part Information*

| Terminal Type ID | Terminated Lead | Diagnostic Test Probe | Terminal Removal Tool | Service Terminal | Tray | Core Crimp | Insulation Crimp |
|---|---|---|---|---|---|---|---|
| I | Pending | Pending | Pending | Not Available | Not Available | Not Available | Not Available |

### *K20 Engine Control Module X3 (LML)*

| Pin | Size | Color | Circuit | Function | Terminal Type ID | Option |
|---|---|---|---|---|---|---|
| 1 | - | - | - | Not Occupied | - | - |
| 2 | 0 | BU/YE | 6861 | Water In Fuel Sensor Signal | I | LML |
| 3 | 0 | L-BU | 1937 | Secondary Fuel Level Sensor Signal | I | LML |
| 4 | 0 | WH | 331 | Oil Pressure Sensor Signal | I | LML |
| 5 | 0 | YE | 5361 | Brake Apply Sensor Signal | I | LML |
| 6 | 0 | VT/WH | 7584 | Exhaust Gas Recirculation Temperature Sensor #1 Supply Voltage | I | LML |
| 7 | 0 | BU | 7583 | Exhaust Gas Recirculation Temperature Sensor #2 Supply Voltage | I | LML |
| 8 | 0 | L-GN | 2032 | Coolant Temperature Sensor Signal | I | LML |
| 9 | 0 | BR/WH | 5763 | Exhaust Gas Recirculation Valve Sensor Signal | I | LML |
| 10 | 0 | YE | 5947 | Variable Nozzle Turbo Position Sensor Signal | I | LML |
| 11 | - | - | - | Not Occupied | - | - |
| 12 | 0 | BR | 3681 | Charge Air Cooler Outlet Temperature Sensor Signal | I | LML |
| 13 | 0 |  | 3680 | Charge Air Cooler Outlet Temperature Sensor Return | I | LML |
| 14 | 0 |  | 2917 | Fuel Rail Pressure Sensor (5) Volt Reference | I | LML |
| 15 | 0 | WH | 5359 | Brake Apply Sensor Supply Voltage | I | LML |

| | | | | | | |
|---|---|---|---|---|---|---|
| 16 | 0 | GY | 2704 | Manifold Absolute Pressure Sensor 5 Volt Reference | I | LML |
| 17 | 0 | BU | 6863 | Water In Fuel Sensor Low Reference | I | LML |
| 18 | 0 | BU | 5277 | Exhaust Gas Temperature Sensor (1) | I | LML |
| 19 | - | - | - | Not Occupied | - | - |
| 20 | 0 | YE | 2918 | Fuel Rail Pressure Sensor Signal | I | LML |
| 21 | 0 | L-GN | 432 | Manifold Absolute Pressure Sensor Signal | I | LML |
| 22-23 | - | - | - | Not Occupied | - | - |
| 24 | 0 | YE | 410 | Engine Coolant Temperature Sensor Signal | I | LML |
| 25 | 0 | GN/WH | 3654 | EGR Cooler Bypass Position Sensor Signal | I | LML |
| 26 | - | - | - | Not Occupied | - | - |
| 27 | 0 | BR/GY | 7072 | Sensor Fuel Temperature 1 Signal | I | LML |
| 28 | 0 | D-GN | 3683 | Charge Air Cooler Inlet Temperature Sensor Signal | I | LML |
| 29 | 0 | BK | 3682 | Charge Air Cooler Inlet Temperature Sensor Return | I | LML |
| 30 | 0 | GY | 2705 | Oil Pressure Sensor 5 Volt Reference | I | LML |
| 31 | 0 | BU | 6259 | Camshaft CAM W Supply Voltage | I | LML |
| 32 | 0 | GY | 2701 | Throttle Position Sensor 5 Volt Reference | I | LML |
| 33-35 | - | - | - | Not Occupied | - | - |
| 36 | 0 | OG/BK | 2919 | Fuel Rail Pressure Sensor Low Reference | I | LML |
| 37 | 0 | OG/BK | 469 | Manifold Absolute Pressure Sensor Low Reference | I | LML |
| 38 | 0 | BR/WH | 5360 | Brake Apply Sensor Low Reference | I | LML |
| 39 | - | - | - | Not Occupied | - | - |
| 40 | 0 | | 2761 | Coolant Temperature Sensor Low Reference | I | LML |
| 41 | 0 | L-BU | 7564 | Humidity Sensor Signal | I | LML |
| 42-43 | - | - | - | Not Occupied | - | - |
| 44 | 0 | GY/BK | 5765 | Fuel Filter Pressure Switch Signal | I | LML |
| 45 | - | - | - | Not Occupied | - | - |
| 46 | 0 | BR/WH | 7073 | Sensor Fuel Temperature 1 Return | I | LML |
| 47-48 | - | - | - | Not Occupied | - | - |
| 49 | 0.8 | GY/WH | 4908 | Direct Fuel Injector (DFI) High Voltage Supply Cylinder 8 | I | LML |
| 50 | 0.8 | WH | 4902 | Direct Fuel Injector (DFI) High Voltage Supply Cylinder 2 | I | LML |
| 51 | 0.8 | | 4802 | Direct Fuel Injector (DFI) High Voltage Supply Cylinder 2 | I | LML |

| | | | | | | |
|---|---|---|---|---|---|---|
| 52 | 0.8 | L-GN | 4805 | Direct Fuel Injector (DFI) High Voltage Control Cylinder 5 | I | LML |
| 53 | - | - | - | Not Occupied | - | - |
| 54 | 0 | L-GN/BK | 5746 | Exhaust Gas Recirculation Valve Motor Low Signal | I | LML |
| 55 | 0 | OG/BK | 5764 | Exhaust Gas Recirculation Valve Motor High Signal | I | LML |
| 56 | 0.8 | BR | 582 | Throttle Actuator Control Close | I | LML |
| 57 | 0.8 | YE | 581 | Throttle Actuator Control Open | I | LML |
| 58 | 0 | OG/BK | 3656 | EGR Cooler Bypass Motor Close Control | I | LML |
| 59 | 0 | L-GN | 3655 | EGR Cooler Bypass Motor Open Control | I | LML |
| 60 | 0 | GY/BK | 6272 | Crankshaft 60X Sensor Low Reference | I | LML |
| 61 | 0 | WH/BK | 6271 | Crankshaft 60X Sensor Signal | I | LML |
| 62 | 0 | D-GN | 485 | Throttle Position Sensor Signal (1) | I | LML |
| 63 | - | - | - | Not Occupied | - | - |
| 64 | 0 | GN/WH | 6142 | Power Take Off Engine Shutdown Signal | I | LML |
| 65 | 0 | BU/WH | 6265 | Camshaft CAM W Signal | I | LML |
| 66 | 0 | BR | 6266 | Camshaft CAM W Ground | I | LML |
| 67 | 0 | BR | 6274 | Exhaust Gas Recirculation Temperature Sensor Low Reference | I | LML |
| 68 | 0 | WH | 6275 | Exhaust Gas Recirculation Temperature Sensor #2 Low Reference | I | LML |
| 69 | 0.8 | D-GN/WH | 4903 | Direct Fuel Injector (DFI) High Voltage Supply Cylinder 3 | I | LML |
| 70 | 0.8 | L-GN/WH | 4905 | Direct Fuel Injector (DFI) High Voltage Supply Cylinder 5 | I | LML |
| 71 | 0.8 | D-GN | 4803 | Direct Fuel Injector (DFI) High Voltage Control Cylinder 3 | I | LML |
| 72 | 0.8 | GY | 4808 | Direct Fuel Injector (DFI) High Voltage Control Cylinder 8 | I | LML |
| 73 | 3 | BK/WH | 451 | Signal Ground | I | LML |

## K22 Cooling Fan Control Module (LML)

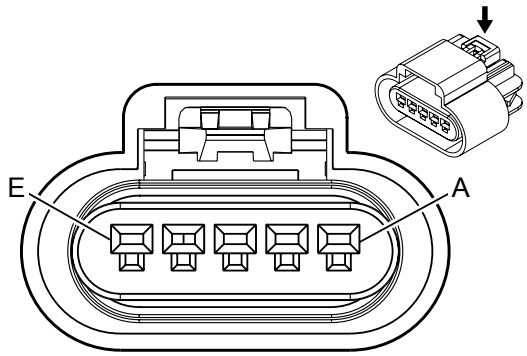


### Connector Part Information

Harness Type: Engine

OEM Connector: 13519051

Service Connector: 13585858

Description: 5-Way F 150 GT Series, Sealed (BK)

### *Terminal Part Information*

| Terminal Type ID | Terminated Lead | Diagnostic Test Probe | Terminal Removal Tool | Service Terminal | Tray | Core Crimp | Insulation Crimp |
|---|---|---|---|---|---|---|---|
| I | 13575412 | J-35616-2A (GY) | J-38125-553 | 12191819 | 8 | 2 | 1 |
| II | 13575298 | J-35616-2A (GY) | J-38125-553 | 12191819 | 8 | E | 1 |

### *K22 Cooling Fan Control Module (LML)*

| Pin | Size | Color | Circuit | Function | Terminal Type ID | Option |
|---|---|---|---|---|---|---|
| A | 0.75 | BK | 550 | Ground | I | - |
| B | 0.5 | WH | 2368 | Cooling Fan Control Signal | II | - |
| C | 0.5 | BK/BN | 6141 | Cooling Fan Speed Low Reference | II | - |
| D | 0.5 | D-BU/VT | 2364 | Cooling Fan Speed Signal | II | - |
| E | 0.5 | GY/RD | 2365 | Cooling Fan Speed 5 Volt Reference | II | - |

## K27 Fuel Pump Control Module

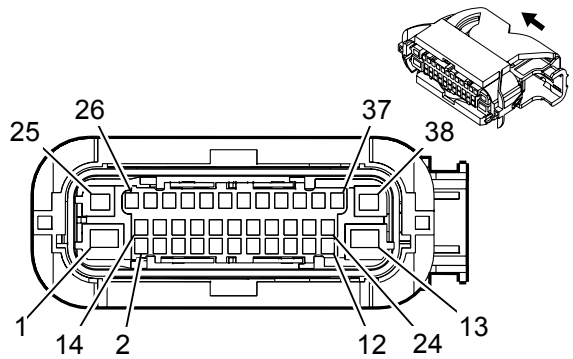


### Connector Part Information

Harness Type: Chassis

OEM Connector: 13962189

Service Connector: 19301817

Description: 38-Way F 1.5, 2.8, 4.8 MCP Series, Sealed

### *Terminal Part Information*

| Terminal Type ID | Terminated Lead | Diagnostic Test Probe | Terminal Removal Tool | Service Terminal | Tray | Core Crimp | Insulation Crimp |
|---|---|---|---|---|---|---|---|
| I | Pending | Pending | Pending | Not Available | Not Available | Not Available | Not Available |

### *K27 Fuel Pump Control Module*

| Pin | Size | Color | Circuit | Function | Terminal Type ID | Option |
|---|---|---|---|---|---|---|
| 1 | 0.75 | RD/WH | 2040 | Battery Positive Voltage | I | - |
| 2-12 | - | - | - | Not Occupied | - | - |
| 13 | 0.75 | BK | 1750 | Ground | I | - |
| 14 | 0.5 | VT/YE | 5985 | Accessory Wakeup Serial Data | I | - |
| 15 | - | - | - | Not Occupied | - | - |
| 16 | 0.5 | D-BU/RD | 7632 | Integrated Trailer Brake Controller Switch 5 Volt Reference | I | - |
| 17 | 0.5 | D-BU | 47 | Trailer Auxiliary Supply Voltage | I | - |
| 18 | 0.5 | BN | 7634 | Integrated Trailer Brake Contoller Redundant Manual Apply Signal | I | - |
| 19 | 0.5 | BK/BN | 7631 | Integrated Trailer Brake Controller Switch Low Reference | I | - |
| 20 | 0.5 | YE | 7635 | Integrated Trailer Brake Controller Manual Apply Signal | I | - |
| 21 | 0.5 | L-GN/BK | 7633 | Integrated Trailer Brake Controller User Gain Signal | I | - |
| 22 | 0.5 | YE/BK | 2224 | Trailer Brake Enable Signal | I | - |
| 23 | 0.5 | WH/BK | 2223 | Trailer Brake Control Signal | I | - |
| 24 | - | - | - | Not Occupied | - | - |
| 25 | 0.75 | PU/L-GN | 439 | Run/Crank Ignition 1 Voltage | I | - |

| | | | | | | |
|---|---|---|---|---|---|---|
| 26 | 0.5 | D-BU | 2500 | High Speed GMLAN Serial Data (+) (1) | I | - |
| 27 | 0.5 | D-BU | 2500 | High Speed GMLAN Serial Data (+) (1) | I | - |
| 28 | 0.5 | WH | 2501 | High Speed GMLAN Serial Data (-) (1) | I | - |
| 29 | 0.5 | WH | 2501 | High Speed GMLAN Serial Data (-) (1) | I | - |
| 30 | 0.5 | GY | 2225 | Trailer Brake Current Feedback Signal | I | - |
| 31-38 | - | - | - | Not Occupied | - | - |

## K29 Seat Heating Control Module X1

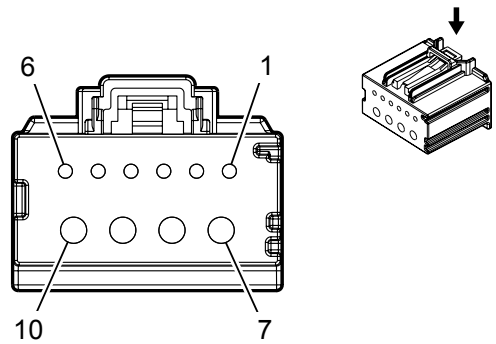


### Connector Part Information

Harness Type: Passenger Seat Cushion

OEM Connector: 31372-1000

Service Connector: Service by Harness - See Part Catalog

Description: 10-Way F 1.5, 2.8 Series (BK)

### *Terminal Part Information*

| Terminal Type ID | Terminated Lead | Diagnostic Test Probe | Terminal Removal Tool | Service Terminal | Tray | Core Crimp | Insulation Crimp |
|---|---|---|---|---|---|---|---|
| I | Not Available | Not Available | Not Available | Not Available | Not Available | Not Available | Not Available |

### *K29 Seat Heating Control Module X1*

| Pin | Size | Color | Circuit | Function | Terminal Type ID | Option |
|---|---|---|---|---|---|---|
| 1 | 0.75 | RD/L-GN | 6140 | Battery Positive Voltage | I | - |
| 2 | - | - | - | Not Occupied | - | - |
| 3 | 0.75 | WH/BN | 2481 | Passenger Heated Back Element Supply Voltage | I | - |
| 4 | 0.75 | BN/L-BU | 2479 | Passenger Heated Seat Element Supply Voltage | I | - |
| 5 | 0.75 | BN | 2432 | Driver Heated Back Element Supply Voltage | I | - |
| 6 | 0.75 | BN/VT | 2077 | Driver Heated Seat Element Supply Voltage | I | - |
| 7 | - | - | - | Not Occupied | - | - |
| 8 | 0.75 | BK | 1250 | Ground | I | - |
| 9 | - | - | - | Not Occupied | - | - |
| 10 | 0.75 | RD/L-GN | 5140 | Battery Positive Voltage | I | - |

## K29 Seat Heating Control Module X2

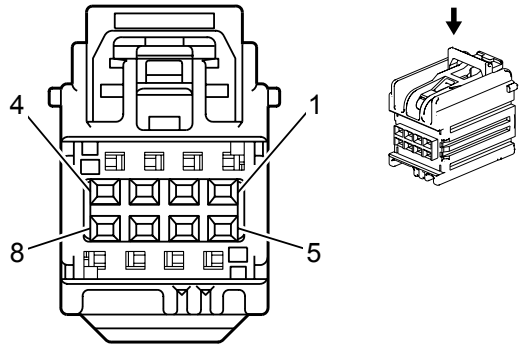


### Connector Part Information

Harness Type: Passenger Seat Cushion

OEM Connector: 7283-9028-30

Service Connector: 13576542

Description: 8-Way F YESC Kaizen Series (BK)

### *Terminal Part Information*

| Terminal Type ID | Terminated Lead | Diagnostic Test Probe | Terminal Removal Tool | Service Terminal | Tray | Core Crimp | Insulation Crimp |
|---|---|---|---|---|---|---|---|
| I | Not Available | Not Available | Not Available | Not Available | Not Available | Not Available | Not Available |

### *K29 Seat Heating Control Module X2*

| Pin | Size | Color | Circuit | Function | Terminal Type ID | Option |
|---|---|---|---|---|---|---|
| 1-5 | - | - | - | Not Occupied | - | - |
| 6 | 0.35 | L-GN/L-BU | 6133 | Linear Interconnect Network Bus 2 | I | - |
| 7-8 | - | - | - | Not Occupied | - | - |

## K33 HVAC Control Module X1

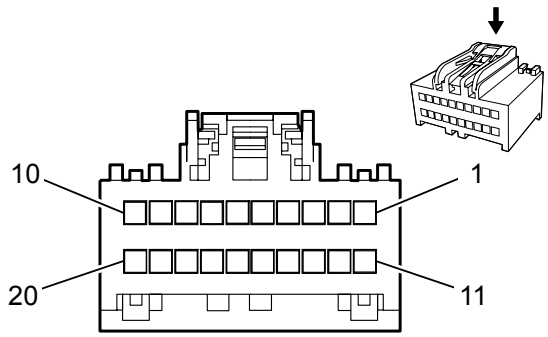


### Connector Part Information

Harness Type: HVAC

OEM Connector: 13611322

Service Connector: 13576644

Description: 20-Way F 0.64 Series (GN with WH Terminal Position Assurance)

### *Terminal Part Information*

| Terminal Type ID | Terminated Lead | Diagnostic Test Probe | Terminal Removal Tool | Service Terminal | Tray | Core Crimp | Insulation Crimp |
|---|---|---|---|---|---|---|---|
| I | Not Available | Not Available | Not Available | Not Available | Not Available | Not Available | Not Available |

### *K33 HVAC Control Module X1*

| Pin | Size | Color | Circuit | Function | Terminal Type ID | Option |
|---|---|---|---|---|---|---|
| 1-3 | - | - | - | Not Occupied | - | - |
| 4 | 0.35 | D-BU/WH | 734 | Inside Air Temperature Sensor Signal | I | - |
| 5-12 | - | - | - | Not Occupied | - | - |
| 13 | 0.35 | YE/VT | 1783 | Twilight Sentinel Delay Signal | I | - |
| 14 | 0.35 | YE/VT | 1783 | Twilight Sentinel Delay Signal | I | - |
| 15-17 | - | - | - | Not Occupied | - | - |
| 18 | 0.35 | BN | 404 | Upper Air Temperature Sensor Signal | I | - |
| 19 | 0.35 | BN/BK | 405 | Lower Air Temperature Sensor Signal | I | - |
| 20 | 0.35 | GY | 590 | Solar Sensor Driver Signal | I | - |

## K33 HVAC Control Module X2

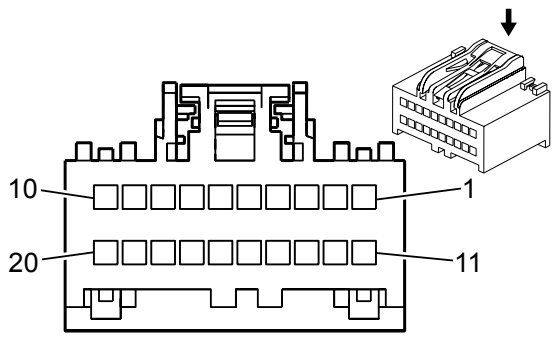


### Connector Part Information

Harness Type: HVAC

OEM Connector: 15491305

Service Connector: 15126709

Description: 20-Way F USCAR 64 Series (BN)

### *Terminal Part Information*

| Terminal Type ID | Terminated Lead | Diagnostic Test Probe | Terminal Removal Tool | Service Terminal | Tray | Core Crimp | Insulation Crimp |
|---|---|---|---|---|---|---|---|
| I | Not Available | Not Available | Not Available | Not Available | Not Available | Not Available | Not Available |

### *K33 HVAC Control Module X2*

| Pin | Size | Color | Circuit | Function | Terminal Type ID | Option |
|---|---|---|---|---|---|---|
| 1 | 0.5 | RD/VT | 3340 | Battery Positive Voltage | I | - |
| 2 | 0.35 | L-GN | 5060 | Low Speed GMLAN Serial Data | I | - |
| 3 | - | - | - | Not Occupied | - | - |
| 4 | 0.35 | D-GN/YE | 7531 | Linear Interconnect Network Bus 9 | I | - |
| 5 | 0.5 | YE/D-GN | 3196 | Auxiliary Heater Status Signal | I | - |
| 6 | - | - | - | Not Occupied | - | - |
| 7 | 0.5 | VT | 3195 | Auxiliary Heater Control | I | - |
| 8 | 0.35 | BK/WH | 1851 | Signal Ground | I | - |
| 9 | 0.5 | VT/GY | 539 | Run/Crank Ignition 1 Voltage | I | - |
| 10 | 0.5 | D-BU/YE | 7574 | Electric Variable Displacement Control | I | - |
| 11 | 0.5 | L-BU/BN | 7573 | Electric Variable Displacement Supply | I | - |
| 12-14 | - | - | - | Not Occupied | - | - |
| 15 | 0.35 | D-BU/GY | 754 | Blower Motor Speed Control | I | - |
| 16 | 0.35 | L-GN/BK | 2211 | Rear Blower Motor Speed Control | I | - |
| 17 | 0.35 | GY/RD | 598 | 5 Volt Reference | I | - |

| | | | | | | |
|---|---|---|---|---|---|---|
| 18 | 0.35 | BK/YE | 1791 | Air Temperature Door Control Low Reference | I | - |
| 19 | 0.35 | BN/VT | 193 | Rear Defog Relay Control | I | - |
| 20 | - | - | - | Not Occupied | - | - |

## K33 HVAC Control Module X3

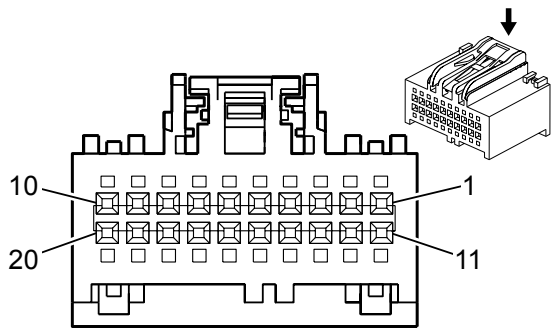


### Connector Part Information

Harness Type: HVAC

OEM Connector: 15489824

Service Connector: 15126711

Description: 20-Way F 0.64 Series (BK with WH Terminal Position Assurance)

### *Terminal Part Information*

| Terminal Type ID | Terminated Lead | Diagnostic Test Probe | Terminal Removal Tool | Service Terminal | Tray | Core Crimp | Insulation Crimp |
|---|---|---|---|---|---|---|---|
| I | Not Available | Not Available | Not Available | Not Available | Not Available | Not Available | Not Available |

### *K33 HVAC Control Module X3*

| Pin | Size | Color | Circuit | Function | Terminal Type ID | Option |
|---|---|---|---|---|---|---|
| 1 | 0.35 | D-BU | 516 | Upper Left Air Temperature Sensor Signal | I | - |
| 2 | 0.35 | YE/BN | 2273 | Mode Door Control | I | - |
| 3 | 0.35 | WH | 119 | Mode Door Control | I | - |
| 4 | 0.35 | WH/D-GN | 2275 | Mode 1 Valve Position Sensor Signal | I | - |
| 5-8 | - | - | - | Not Occupied | - | - |
| 9 | 0.35 | BK/YE | 407 | Sensor Low Reference | I | - |
| 10 | - | - | - | Not Occupied | - | - |
| 11 | 0.35 | GY/D-GN | 2210 | Air Temperature Door Control | I | - |
| 12 | 0.35 | L-BU/BN | 1199 | Air Temperature Door Control | I | - |
| 13 | 0.35 | D-BU/YE | 733 | Air Temperature Door Position Signal | I | - |
| 14-15 | - | - | - | Not Occupied | - | - |
| 16 | 0.35 | YE/BK | 2274 | Recirculation Door Control | I | - |
| 17 | 0.35 | D-GN | 1614 | Recirculation Door Control | I | - |
| 18 | 0.35 | VT/L-GN | 1838 | Recirculation Door Position Signal | I | - |
| 19 | - | - | - | Not Occupied | - | - |

| | | | | | | |
|---|---|---|---|---|---|---|
| 20 | 0.35 | GY | 6137 | EVAP Core Temperature Sensor Signal | I | - |

## K33 HVAC Control Module X4

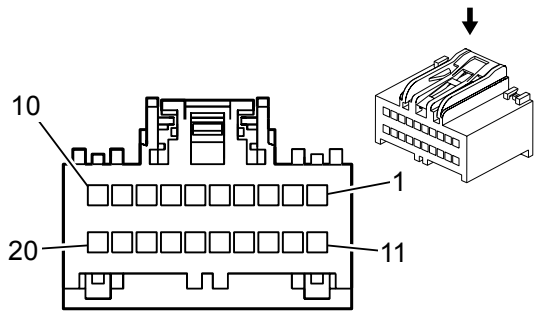


### Connector Part Information

Harness Type: HVAC

OEM Connector: 15491304

Service Connector: 15126710

Description: 20-Way F USCAR 64  Series (GY)

### *Terminal Part Information*

| Terminal Type ID | Terminated Lead | Diagnostic Test Probe | Terminal Removal Tool | Service Terminal | Tray | Core Crimp | Insulation Crimp |
|---|---|---|---|---|---|---|---|
| I | Not Available | Not Available | Not Available | Not Available | Not Available | Not Available | Not Available |

### *K33 HVAC Control Module X4*

| Pin | Size | Color | Circuit | Function | Terminal Type ID | Option |
|---|---|---|---|---|---|---|
| 1-4 | - | - | - | Not Occupied | - | - |
| 5 | 0.35 | GY/BK | 2778 | Passenger Air Temperature Motor Control | I | - |
| 6 | 0.35 | WH/BK | 1236 | Passenger Air Temperature Door Control | I | - |
| 7 | 0.35 | BN/L-BU | 1646 | Passenger Air Temperature Door Position Signal | I | - |
| 8 | - | - | - | Not Occupied | - | - |
| 9 | 0.35 | YE | 517 | Upper Right Air Temperature Sensor Signal | I | - |
| 10 | - | - | - | Not Occupied | - | - |
| 11 | 0.35 | L-GN | 518 | Lower Left Air Temperature Sensor Signal | I | - |
| 12 | 0.35 | RD | 520 | Lower Right Air Temperature Sensor Signal | I | - |
| 13 | 0.35 | D-GN/WH | 5729 | Rear Mode Motor Supply Voltage | I | - |
| 14 | 0.35 | BK/L-GN | 5730 | Rear Mode Motor Low Reference | I | - |
| 15 | 0.35 | GY | 2599 | Rear Mode Motor Signal | I | - |
| 16 | - | - | - | Not Occupied | - | - |
| 17 | 0.35 | WH/BN | 2775 | Rear Air Temperature Motor Control | I | - |
| 18 | 0.35 | GY | 2614 | Rear Air Temperature Door Control | I | - |

| | | | | | | |
|---|---|---|---|---|---|---|
| 19 | 0.35 | GY/D-BU | 2145 | Passenger Air Temperature Switch Signal | I | - |
| 20 | - | - | - | Not Occupied | - | - |

## K34 Glow Plug Control Module (LML)

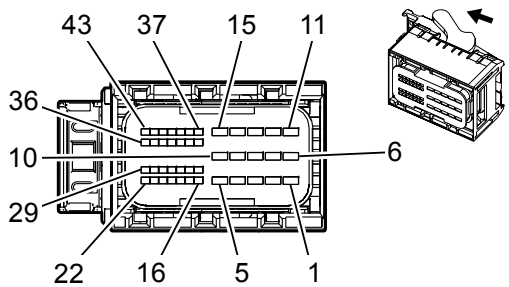


### Connector Part Information

Harness Type: Engine

OEM Connector: 10001042

Service Connector: 13576417

Description: 43-Way F 1.2, 2.8 Series, Sealed

### *Terminal Part Information*

| Terminal Type ID | Terminated Lead | Diagnostic Test Probe | Terminal Removal Tool | Service Terminal | Tray | Core Crimp | Insulation Crimp |
|---|---|---|---|---|---|---|---|
| I | Pending | Pending | Pending | Not Available | Not Available | Not Available | Not Available |

### *K34 Glow Plug Control Module (LML)*

| Pin | Size | Color | Circuit | Function | Terminal Type ID | Option |
|---|---|---|---|---|---|---|
| 1 | 2 | GY/WH | 3675 | DEF Pump Heater Control | I | LML |
| 2 | 2 | WH/YE | 1584 | Glow Plug Supply Voltage (4) | I | LML |
| 3 | 2 | YE | 1583 | Glow Plug Supply Voltage (3) | I | LML |
| 4 | 2 | VT/WH | 1582 | Glow Plug Supply Voltage (2) | I | LML |
| 5 | 2 | VT | 1581 | Glow Plug Supply Voltage (1) | I | LML |
| 6 | 2 | VT/WH | 3199 | DEF Pressure Line Heater Control | I | LML |
| 7 | 0 | | 3673 | Nox Sensor (1) Ground | I | LML |
| 8 | 2 | BK/WH | 351 | Signal Ground | I | LML |
| 9 | 0 | BK | 3671 | Nox Sensor (2) Ground | I | LML |
| 10 | 2 | BK | 550 | Ground | I | LML |
| 11 | 2 | OG/WH | 3677 | DEF Resevoir Heater Control | I | LML |
| 12 | 2 | GN | 1585 | Glow Plug Supply Voltage (5) | I | LML |
| 13 | 2 | GN/WH | 1586 | Glow Plug Supply Voltage (6) | I | LML |
| 14 | 2 | PK | 1587 | Glow Plug Supply Voltage (7) | I | LML |
| 15 | 2 | PK/WH | 1588 | Glow Plug Supply Voltage (8) | I | LML |

| | | | | | | |
|---|---|---|---|---|---|---|
| 16 | 0 | D-GN | 2924 | Intake Air Heater Current Feedback Signal | I | LML |
| 17 | 0 | VT | 2922 | Intake Air Heater Digital Response Signal | I | LML |
| 18 | 0 | | 2501 | High Speed GMLAN Serial Data (-) (1) | I | LML |
| 19 | 0 | | 2501 | High Speed GMLAN Serial Data (-) (1) | I | LML |
| 20-22 | - | - | - | Not Occupied | - | - |
| 23 | 0 | | 2925 | Intake Air Heater Voltage Feedback Signal | I | LML |
| 24 | 0 | BK | 2923 | Intake Air Heater Temperature Signal | I | LML |
| 25 | 0 | BK | 2500 | High Speed GMLAN Serial Data (+) (1) | I | LML |
| 26 | 0 | BK | 2500 | High Speed GMLAN Serial Data (+) (1) | I | LML |
| 27-29 | - | - | - | Not Occupied | - | - |
| 30 | 0 | OG/BK | 2921 | Intake Air Heater Switch On/Off Signal | I | LML |
| 31 | 0 | YE | 2920 | Intake Air Heater Heart Beat Signal | I | LML |
| 32 | - | - | - | Not Occupied | - | - |
| 33 | 0 | PK | 2139 | Run/Crank Ignition 1 Voltage | I | LML |
| 34-36 | - | - | - | Not Occupied | - | - |
| 37 | 0 | VT | 3674 | Nox Sensor (1) Supply Voltage | I | LML |
| 38 | 0 | GY | 3672 | Nox Sensor (2) Supply Voltage | I | LML |
| 39 | - | - | - | Not Occupied | - | - |
| 40 | 0 | BU | 5985 | Accessory Wakeup Serial Data | I | LML |
| 41-43 | - | - | - | Not Occupied | - | - |

## K36 Inflatable Restraint Sensing and Diagnostic Module X1

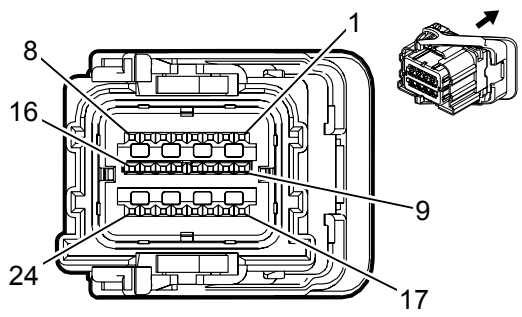


### Connector Part Information

Harness Type: Body

OEM Connector: 13887360

Service Connector: No SDC/FSU

Description: 24-Way F 0.64 Series, Sealed (YE)

### *Terminal Part Information*

| Terminal Type ID | Terminated Lead | Diagnostic Test Probe | Terminal Removal Tool | Service Terminal | Tray | Core Crimp | Insulation Crimp |
|---|---|---|---|---|---|---|---|
| I | Pending | J-35616-64B (L-BU) | J-38125-215A | Not Available | Not Available | Not Available | Not Available |
| II | Pending | Pending | Pending | Not Available | Not Available | Not Available | Not Available |

### *K36 Inflatable Restraint Sensing and Diagnostic Module X1*

| Pin | Size | Color | Circuit | Function | Terminal Type ID | Option |
|---|---|---|---|---|---|---|
| 1 | 0.35 | OG/L-GN | 3023 | Steering Wheel Module Stage 2 High Control | I | - |
| 2 | 0.35 | WH/OG | 3022 | Steering Wheel Module Stage 2 Low Control | I | - |
| 3 | 0.35 | BN/OG | 3020 | Steering Wheel Module Stage 1 Low Control | I | - |
| 4 | 0.35 | OG/VT | 3021 | Steering Wheel Module Stage 1 High Control | I | - |
| 5 | 0.35 | YE/OG | 3025 | Passenger IP Module Stage 1 High Control | I | - |
| 6 | 0.35 | OG/WH | 3024 | Passenger IP Module Stage 1 Low Control | I | - |
| 7 | 0.35 | OG/VT | 3026 | Passenger IP Module Stage 2 Low Control | I | - |
| 8 | 0.35 | GY/OG | 3027 | Passenger IP Module Stage 2 High Control | I | - |
| 9 | 0.5 | RD/L-GN | 4440 | Battery Positive Voltage | I | - |
| 10 | 0.35 | VT/WH | 5234 | Passenger Seat Belt Indicator | I | - |
| 11 | 0.35 | D-BU | 2307 | Passenger Air Bag On Indicator Control | I | - |
| 12 | 0.35 | L-GN | 2308 | Passenger Air Bag Off Indicator Control | I | - |
| 13 | 0.35 | VT/OG | 371 | Passenger IP Module Disable Switch Signal | I | - |
| 14 | 0.35 | D-BU/OG | 7328 | Passenger IP Module Disable Switch Return | I | - |

| | | | | | | |
|---|---|---|---|---|---|---|
| 15 | 0.5 | L-GN | 5060 | Low Speed GMLAN Serial Data | I | - |
| 16 | - | - | - | Not Occupied | - | - |
| 17 | 0.5 | WH/D-BU | 5986 | Serial Data Communication Enable | I | - |
| 18 | 0.5 | D-BU/YE | 6105 | High Speed GMLAN Serial Data (+) (2) | I | - |
| 19 | 0.75<br>0.5 | BK/WH<br>BK/WH | 2751<br>2751 | Signal Ground<br>Signal Ground | I | - |
| 20 | 0.5 | WH | 6106 | High Speed GMLAN Serial Data (-) (2) | I | - |
| 21-24 | - | - | - | Not Occupied | - | - |

## K36 Inflatable Restraint Sensing and Diagnostic Module X2

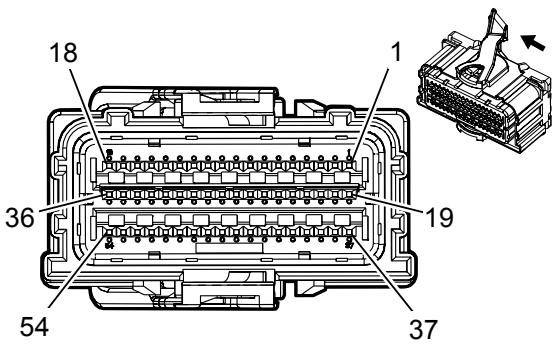


### Connector Part Information

Harness Type: Body

OEM Connector: 13944372

Service Connector: No SDC/FSU

Description: 54-Way F 0.64 Series, Sealed (YE)

### *Terminal Part Information*

| Terminal Type ID | Terminated Lead | Diagnostic Test Probe | Terminal Removal Tool | Service Terminal | Tray | Core Crimp | Insulation Crimp |
|---|---|---|---|---|---|---|---|
| I | Pending | J-35616-64B (L-BU) | J-38125-215A | Not Available | Not Available | Not Available | Not Available |
| II | Pending | Pending | Pending | Not Available | Not Available | Not Available | Not Available |

### *K36 Inflatable Restraint Sensing and Diagnostic Module X2*

| Pin | Size | Color | Circuit | Function | Terminal Type ID | Option |
|---|---|---|---|---|---|---|
| 1-8 | - | - | - | Not Occupied | - | - |
| 9 | 0.35 | OG/YE | 3481 | Driver Seat Belt Anchor Pretensioner High Control | I | - |
| 10 | 0.35 | YE/OG | 3482 | Driver Seat Belt Anchor Pretensioner Low Control | I | - |
| 11 | 0.35 | GY/OG | 3480 | Passenger Seat Belt Anchor Pretensioner Low Control | I | - |
| 12 | 0.35 | OG/BN | 3479 | Passenger Seat Belt Anchor Pretensioner High Control | I | - |
| 13 | 0.35 | OG/D-BU | 3068 | Driver Side Impact Module High Control | I | - |
| 14 | 0.35 | L-GN/OG | 3069 | Driver Side Impact Module Low Control | I | - |
| 15 | 0.35 | BN/OG | 3067 | Passenger Side Impact Module Low Control | I | - |
| 16 | 0.35 | OG/GY | 3066 | Passenger Side Impact Module High Control | I | - |
| 17 | 0.35 | OG/L-GN | 5019 | Left Front Head Curtain Module High Control | I | - |
| 18 | 0.35 | VT/OG | 5020 | Left Front Head Curtain Module Low Control | I | - |
| 19 | 0.35 | OG/L-GN | 2132 | Left Front Side Impact Sensing Module Signal | I | - |
| 20 | 0.35 | BK/OG | 6628 | Left Front Side Impact Sensing Module Low Reference | I | - |
| 21 | 0.35 | BK/OG | 6629 | Right Front Side Impact Sensing Module Low Reference | I | - |

| | | | | | | |
|---|---|---|---|---|---|---|
| 22 | 0.35 | BN/OG | 2134 | Right Front Side Impact Sensing Module Signal | I | - |
| 23 | 0.35<br>0.35 | OG/GY<br>OG/YE | 6618<br>354 | Middle Front Discriminating Sensor Signal<br>Left Front Discriminating Sensor Signal | I | - |
| 24 | 0.35<br>0.35 | BK/OG<br>BK/OG | 6619<br>5045 | Middle Front Discriminating Sensor Low Reference<br>Left Front Discriminating Sensor Low Reference | I | - |
| 25 | 0.35 | BK/OG | 5600 | Right Front Discriminating Sensor Low Reference | I | - |
| 26 | 0.35 | OG/L-GN | 1409 | Right Front Discriminating Sensor Signal | I | - |
| 27 | 0.35 | OG/D-BU | 6620 | Left Middle Side Impact Sensing Module Signal | I | - |
| 28 | 0.35 | BK/OG | 6621 | Left Middle Side Impact Sensing Module Low Reference | I | - |
| 29 | 0.35 | BK/OG | 6625 | Right Middle Side Impact Sensing Module Low Reference | I | - |
| 30 | 0.35 | OG/VT | 6624 | Right Middle Side Impact Sensing Module Signal | I | - |
| 31-36 | - | - | - | Not Occupied | - | - |
| 37 | 0.5 | RD | 3477 | Driver Seat Belt Retractor Pretensioner High Control | I | - |
| 38 | 0.5 | GY | 3478 | Driver Seat Belt Retractor Pretensioner Low Control | I | - |
| 39 | 0.5 | WH | 3476 | Passenger Seat Belt Retractor Pretensioner Low Control | I | - |
| 40 | 0.5 | L-GN | 3475 | Passenger Seat Belt Retractor Pretensioner High Control | I | - |
| 41 | 0.35 | OG/BN | 238 | Driver Seat Belt Switch Signal | I | - |
| 42 | 0.35 | OG/L-GN | 5055 | Driver Seat Position Switch Signal | I | - |
| 43 | 0.35 | BK/OG | 1363 | Driver Seat Belt Switch Low Reference | I | - |
| 44 | 0.35 | BK/OG | 1361 | Passenger Seat Belt Switch Low Reference | I | - |
| 45 | 0.35 | OG/VT | 1362 | Passenger Seat Belt Switch Signal | I | - |
| 46 | 0.35 | OG/D-BU | 5056 | Passenger Seat Position Switch Signal | I | - |
| 47-52 | - | - | - | Not Occupied | - | - |
| 53 | 0.35 | OG/GY | 5021 | Right Front Head Curtain Module High Control | I | - |
| 54 | 0.35 | WH/OG | 5022 | Right Front Head Curtain Module Low Control | I | - |

## K38 Chassis Control Module

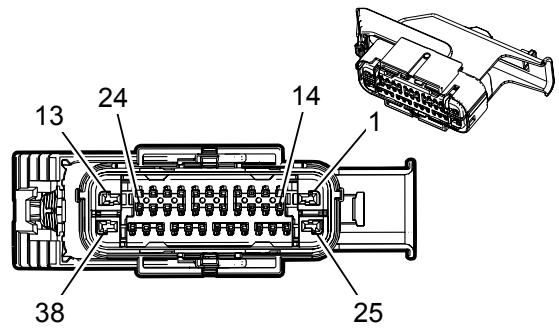


### Connector Part Information

Harness Type: Chassis

OEM Connector: 13638773

Service Connector: 13574909

Description: 38-Way F 0.64, 2.8, 6.3 Series, Sealed (BK)

### *Terminal Part Information*

| Terminal Type ID | Terminated Lead | Diagnostic Test Probe | Terminal Removal Tool | Service Terminal | Tray | Core Crimp | Insulation Crimp |
|---|---|---|---|---|---|---|---|
| I | 13575408 | J-35616-4A (PU) | J-38125-553 | 15392777 | 23 | D | 5 |
| II | 13578883 | J-35616-64B (L-BU) | J-38125-215A | SAITS-A03T-M064 | 14 | 9 | 9 |
| III | 13579766 | J-35616-64B (L-BU) | J-38125-215A | SAITS-A03T-M064 | 14 | 9 | 9 |

### *K38 Chassis Control Module*

| Pin | Size | Color | Circuit | Function | Terminal Type ID | Option |
|---|---|---|---|---|---|---|
| 1 | 2.5 | RD/VT | 1940 | Battery Positive Voltage | I | - |
| 2 | - | - | - | Not Occupied | - | - |
| 3 | 0.5 | BN | 3891 | Aero Shutter Control | II | - |
| 4 | 0.5 | GY | 3890 | Aero Shutter Control 2 | II | - |
| 5 | 0.5 | D-BU | 2500 | High Speed GMLAN Serial Data (+) (1) | II | - |
| 6 | 0.5 | D-BU | 2500 | High Speed GMLAN Serial Data (+) (1) | II | - |
| 7 | - | - | - | Not Occupied | - | - |
| 8 | 0.5 | VT/YE | 5985 | Accessory Wakeup Serial Data | II | - |
| 9-10 | - | - | - | Not Occupied | - | - |
| 11 | 0.5 | GY | 3890 | Aero Shutter Control 2 | II | - |
| 12 | 0.5 | BN | 3891 | Aero Shutter Control | II | - |
| 13-16 | - | - | - | Not Occupied | - | - |
| 17 | 0.5 | WH | 2501 | High Speed GMLAN Serial Data (-) (1) | II | - |

| | | | | | | |
|---|---|---|---|---|---|---|
| 18 | 0.5 | WH | 2501 | High Speed GMLAN Serial Data (-) (1) | II | - |
| 19-20 | - | - | - | Not Occupied | - | - |
| 21 | 0.75 | PU/L-GN | 439 | Run/Crank Ignition 1 Voltage | III | - |
| 22-24 | - | - | - | Not Occupied | - | - |
| 25 | 2.5 | BK | 2150 | Ground | I | - |
| 26-38 | - | - | - | Not Occupied | - | - |

## K40 Seat Memory Control Module X1

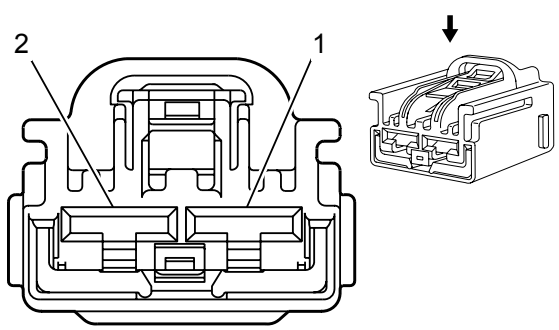


### Connector Part Information

Harness Type: Driver Seat Cushion

OEM Connector: 7283-6458-40

Service Connector: 88988507

Description: 2-Way F 6.3 Series (L-GY)

### *Terminal Part Information*

| Terminal Type ID | Terminated Lead | Diagnostic Test Probe | Terminal Removal Tool | Service Terminal | Tray | Core Crimp | Insulation Crimp |
|---|---|---|---|---|---|---|---|
| I | Not Available | Not Available | Not Available | Not Available | Not Available | Not Available | Not Available |

### *K40 Seat Memory Control Module X1*

| Pin | Size | Color | Circuit | Function | Terminal Type ID | Option |
|---|---|---|---|---|---|---|
| 1 | 0.75 | RD/BN | 1140 | Battery Positive Voltage | I | - |
| 2 | 2.5 | RD/YE | 5040 | Battery Positive Voltage | I | - |

## K40 Seat Memory Control Module X2

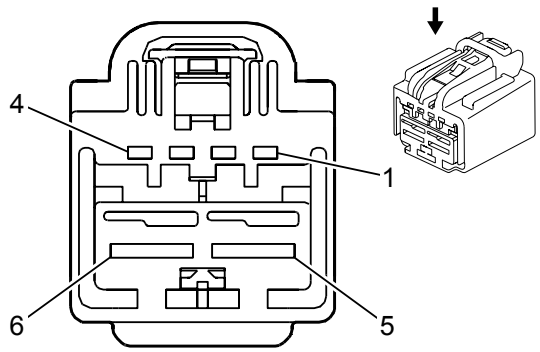


### Connector Part Information

Harness Type: Driver Seat Cushion

OEM Connector: 7283-9749-30

Service Connector: 88988512

Description: 6-Way F YESC Kaizen Series (BK)

### *Terminal Part Information*

| Terminal Type ID | Terminated Lead | Diagnostic Test Probe | Terminal Removal Tool | Service Terminal | Tray | Core Crimp | Insulation Crimp |
|---|---|---|---|---|---|---|---|
| I | 13327110 | J-35616-2A (GY) | J-38125-553 | 12191812 | 19 | E | C |
| II | Not Available | Not Available | Not Available | Not Available | Not Available | Not Available | Not Available |

### *K40 Seat Memory Control Module X2*

| Pin | Size | Color | Circuit | Function | Terminal Type ID | Option |
|---|---|---|---|---|---|---|
| 1 | 0.5 | L-GN | 5060 | Low Speed GMLAN Serial Data | I | - |
| 2 | - | - | - | Not Occupied | - | - |
| 3 | 0.5 | L-GN/WH | 7530 | Linear Interconnect Network Bus 8 | I | - |
| 4 | - | - | - | Not Occupied | - | - |
| 5 | 2.5 | BK | 1150 | Ground | II | - |
| 6 | - | - | - | Not Occupied | - | - |

## K40 Seat Memory Control Module X3

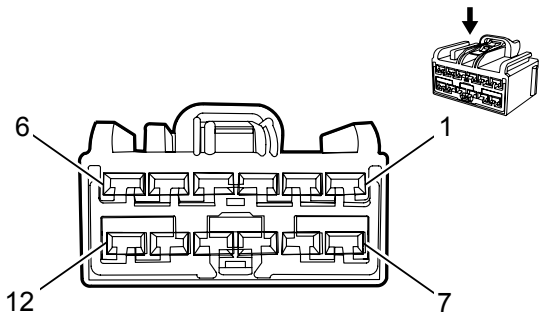


### Connector Part Information

Harness Type: Driver Seat Cushion

OEM Connector: 7283-6467-40

Service Connector: 13580444

Description: 12-Way F 2.8 Kaizen Series (L-GY)

### *Terminal Part Information*

| Terminal Type ID | Terminated Lead | Diagnostic Test Probe | Terminal Removal Tool | Service Terminal | Tray | Core Crimp | Insulation Crimp |
|---|---|---|---|---|---|---|---|
| I | Not Available | Not Available | Not Available | Not Available | Not Available | Not Available | Not Available |

### *K40 Seat Memory Control Module X3*

| Pin | Size | Color | Circuit | Function | Terminal Type ID | Option |
|---|---|---|---|---|---|---|
| 1 | 1.5 | L-GN/YE | 276 | Driver Power Seat Recline Motor Forward Control | I | - |
| 2 | 1.5 | L-BU/YE | 277 | Driver Power Seat Recline Motor Rearward Control | I | - |
| 3 | 1.5 | L-GN/BN | 286 | Driver Power Seat Front Vertical Motor Up Control | I | - |
| 4 | 1.5 | L-BU/VT | 287 | Driver Power Seat Front Vertical Motor Down Control | I | - |
| 5 | 1.5 | YE | 282 | Driver Power Seat Rear Vertical Motor Up Control | I | - |
| 6 | 1.5 | GY/L-BU | 283 | Driver Power Seat Rear Vertical Motor Down Control | I | - |
| 7 | 1.5 | YE/BN | 768 | Driver Power Seat Lumbar Motor Up Control | I | - |
| 8 | 1.5 | YE/L-BU | 767 | Driver Power Seat Lumbar Motor Down Control | I | - |
| 9 | 1.5 | L-BU | 611 | Driver Power Seat Lumbar Motor Forward Control | I | - |
| 10 | 1.5 | VT | 610 | Driver Power Seat Lumbar Motor Rearward Control | I | - |
| 11 | 1.5 | YE/L-BU | 285 | Driver Power Seat Horizontal Motor Forward Control | I | - |
| 12 | 1.5 | GY/L-GN | 284 | Driver Power Seat Horizontal Motor Rearward Control | I | - |

## K40 Seat Memory Control Module X4

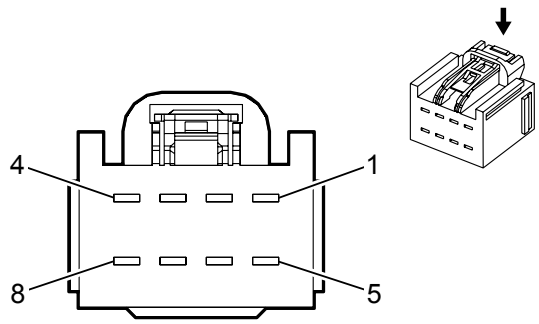


### Connector Part Information

Harness Type: Driver Seat Cushion

OEM Connector: 7283-3243-40

Service Connector: 13581036

Description: 8-Way F 2.8 Series (L-GY)

### *Terminal Part Information*

| Terminal Type ID | Terminated Lead | Diagnostic Test Probe | Terminal Removal Tool | Service Terminal | Tray | Core Crimp | Insulation Crimp |
|---|---|---|---|---|---|---|---|
| I | Not Available | Not Available | Not Available | Not Available | Not Available | Not Available | Not Available |

### *K40 Seat Memory Control Module X4*

| Pin | Size | Color | Circuit | Function | Terminal Type ID | Option |
|---|---|---|---|---|---|---|
| 1 | 1.5 | L-GN/VT | 5130 | Adjustable Pedal Actuator Forward Control | I | - |
| 2 | 1.5 | YE | 5129 | Adjustable Pedal Actuator Rearward Control | I | - |
| 3-8 | - | - | - | Not Occupied | - | - |

## K40 Seat Memory Control Module X5

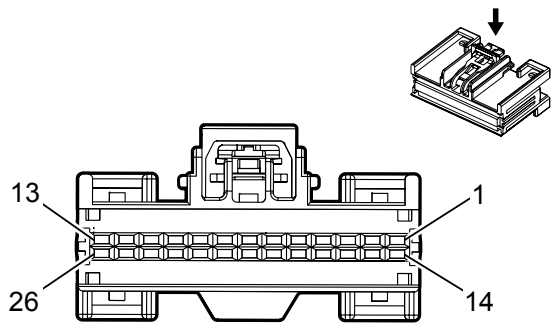


### Connector Part Information

Harness Type: Driver Seat Cushion

OEM Connector: 7287-2043-30

Service Connector: No SDC/FSU

Description: 26-Way F 0.64 Series (BK)

### *Terminal Part Information*

| Terminal Type ID | Terminated Lead | Diagnostic Test Probe | Terminal Removal Tool | Service Terminal | Tray | Core Crimp | Insulation Crimp |
|---|---|---|---|---|---|---|---|
| I | Not Available | Not Available | Not Available | Not Available | Not Available | Not Available | Not Available |

### *K40 Seat Memory Control Module X5*

| Pin | Size | Color | Circuit | Function | Terminal Type ID | Option |
|---|---|---|---|---|---|---|
| 1 | 0.5 | WH/RD | 3298 | Memory Sensor High Reference (2) | I | - |
| 2-3 | - | - | - | Not Occupied | - | - |
| 4 | 0.5 | BN | 3038 | Right Rear Haptic Seat Motor Control | I | - |
| 5 | 0.5 | YE/BN | 3037 | Left Rear Haptic Seat Motor Control | I | - |
| 6 | 0.5 | BK/GY | 6206 | Memory Sensor Low Reference | I | - |
| 7 | 0.5 | YE/BN | 1522 | Power Seat Horizontal Forward Switch Signal | I | - |
| 8 | 0.5 | GY/L-GN | 1523 | Power Seat Horizontal Rearward Switch Signal | I | - |
| 9 | 0.5 | L-GN/BN | 1518 | Power Seat Front Vertical Up Switch Signal | I | - |
| 10 | 0.5 | L-BU/VT | 1520 | Power Seat Front Vertical Down Switch Signal | I | - |
| 11 | 0.5 | L-GN | 569 | Memory Seat Horizontal Motor Position Sensor Signal | I | - |
| 12 | 0.5 | BN/WH | 557 | Memory Seat Front Vertical Motor Position Sensor Signal | I | - |
| 13 | 0.5 | WH/RD | 6207 | Memory Sensor High Reference | I | - |
| 14 | 0.5 | YE | 1065 | Driver Seat Lumbar Forward Switch Signal | I | - |
| 15 | 0.5 | L-BU/VT | 1064 | Driver Seat Lumbar Rearward Switch Signal | I | - |
| 16 | 0.5 | WH | 1066 | Driver Seat Lumbar Up Switch Signal | I | - |

| | | | | | | |
|---|---|---|---|---|---|---|
| 17 | 0.5 | YE/BK | 1067 | Driver Seat Lumbar Down Switch Signal | I | - |
| 18 | - | - | - | Not Occupied | - | - |
| 19 | 0.5 | YE | 1519 | Power Seat Rear Vertical Up Switch Signal | I | - |
| 20 | 0.5 | YE/L-BU | 1521 | Power Seat Rear Vertical Down Switch Signal | I | - |
| 21 | 0.5 | GY/BK | 1269 | Power Seat Recline Forward Switch Signal | I | - |
| 22 | 0.5 | L-GN/GY | 1270 | Power Seat Recline Rearward Switch Signal | I | - |
| 23-24 | - | - | - | Not Occupied | - | - |
| 25 | 0.5 | YE/L-BU | 568 | Memory Seat Rear Vertical Motor Position Sensor Signal | I | - |
| 26 | 0.5 | WH/BK | 570 | Driver Memory Seat Recline Motor Position Sensor Signal | I | - |

## K40 Seat Memory Control Module X6

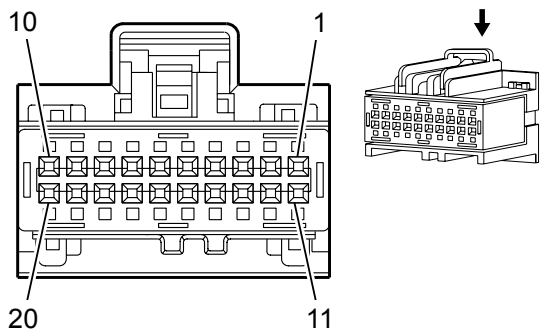


### Connector Part Information

Harness Type: Driver Seat Cushion

OEM Connector: 31410-1201

Service Connector: 15126710

Description: 20-Way F 64 Series, Sealed (GY with WH Terminal Position Assurance)

### *Terminal Part Information*

| Terminal Type ID | Terminated Lead | Diagnostic Test Probe | Terminal Removal Tool | Service Terminal | Tray | Core Crimp | Insulation Crimp |
|---|---|---|---|---|---|---|---|
| I | Not Available | Not Available | Not Available | Not Available | Not Available | Not Available | Not Available |

### *K40 Seat Memory Control Module X6*

| Pin | Size | Color | Circuit | Function | Terminal Type ID | Option |
|---|---|---|---|---|---|---|
| 1-3 | - | - | - | Not Occupied | - | - |
| 4 | 0.35 | L-BU | 5952 | Adjustable Pedal Position Sensor Brake Signal | I | - |
| 5 | - | - | - | Not Occupied | - | - |
| 6 | 0.35 | L-GN/GY | 5286 | Adjustable Pedal Switch Forward Signal | I | - |
| 7 | 0.35 | WH/GY | 5285 | Adjustable Pedal Switch Rearward Signal | I | - |
| 8-10 | - | - | - | Not Occupied | - | - |
| 11 | 0.35 | BK/L-BU | 5978 | Memory Switch Low Reference | I | - |
| 12 | 0.35 | WH | 615 | Memory Seat Switch Signal (1) | I | - |
| 13-14 | - | - | - | Not Occupied | - | - |
| 15 | 0.35 | L-GN/L-BU | 614 | Memory Seat Switch Set Signal | I | - |
| 16-20 | - | - | - | Not Occupied | - | - |

## K41 Front and Rear Parking Assist Control Module X1

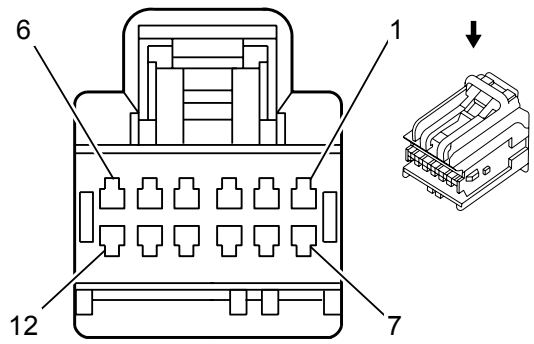


### Connector Part Information

Harness Type: Body

OEM Connector: 13551678

Service Connector: 89047364

Description: 12-Way F 0.64 Series (BK)

### *Terminal Part Information*

| Terminal Type ID | Terminated Lead | Diagnostic Test Probe | Terminal Removal Tool | Service Terminal | Tray | Core Crimp | Insulation Crimp |
|---|---|---|---|---|---|---|---|
| I | Pending | J-35616-64B (L-BU) | J-38125-215A | Not Available | Not Available | Not Available | Not Available |
| II | 13587474 | J-35616-64B (L-BU) | J-38125-215A | Not Available | Not Available | P | P |

### *K41 Front and Rear Parking Assist Control Module X1*

| Pin | Size | Color | Circuit | Function | Terminal Type ID | Option |
|---|---|---|---|---|---|---|
| 1 | 0.75 | RD/L-GN | 3140 | Battery Positive Voltage | I | - |
| 2 | - | - | - | Not Occupied | - | - |
| 3 | 0.35 | L-GN/BN | 5852 | Rear Park Assist LED Disable Signal | II | - |
| 4 | 0.35 | L-GN | 5060 | Low Speed GMLAN Serial Data | II | - |
| 5-6 | - | - | - | Not Occupied | - | - |
| 7 | 0.75 | BK/WH | 2751 | Signal Ground | I | - |
| 8 | 0.35 | GY/L-GN | 2555 | Rear Park Assist Disable Signal | II | - |
| 9-12 | - | - | - | Not Occupied | - | - |

## K41 Front and Rear Parking Assist Control Module X2

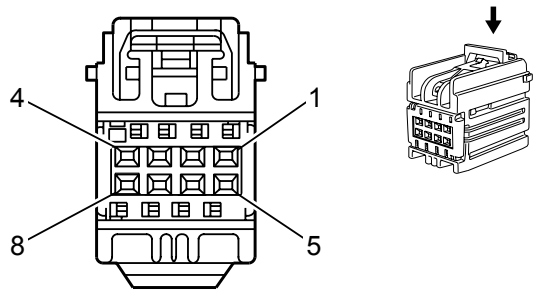


### Connector Part Information

Harness Type: Body

OEM Connector: 13551679

Service Connector: 19115653

Description: 8-Way F YESC Kaizen Series (L-GY)

### *Terminal Part Information*

| Terminal Type ID | Terminated Lead | Diagnostic Test Probe | Terminal Removal Tool | Service Terminal | Tray | Core Crimp | Insulation Crimp |
|---|---|---|---|---|---|---|---|
| I | 13587474 | J-35616-64B (L-BU) | J-38125-215A | Not Available | Not Available | P | P |

### *K41 Front and Rear Parking Assist Control Module X2*

| Pin | Size | Color | Circuit | Function | Terminal Type ID | Option |
|---|---|---|---|---|---|---|
| 1 | 0.5 | YE | 2375 | Left Rear Corner Object Sensor Signal | I | - |
| 2 | - | - | - | Not Occupied | - | - |
| 3 | 0.5 | YE/D-BU | 2376 | Left Rear Middle Object Sensor Signal | I | - |
| 4 | 0.5 | BN/WH | 2374 | Object Sensor Supply Voltage | I | - |
| 5 | 0.5 | YE/VT | 2378 | Right Rear Corner Object Sensor Signal | I | - |
| 6 | - | - | - | Not Occupied | - | - |
| 7 | 0.5 | YE/WH | 2377 | Right Rear Middle Object Sensor Signal | I | - |
| 8 | 0.5 | BK/GY | 2379 | Object Sensor Low Reference | I | - |

## K41 Front and Rear Parking Assist Control Module X3

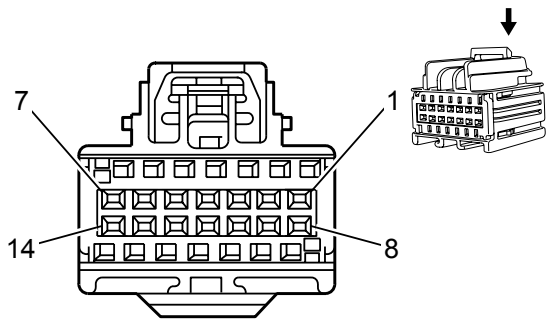


### Connector Part Information

Harness Type: Body

OEM Connector: 15491263

Service Connector: 15127038

Description: 14-Way F Kaizen 64 Series (BU)

### *Terminal Part Information*

| Terminal Type ID | Terminated Lead | Diagnostic Test Probe | Terminal Removal Tool | Service Terminal | Tray | Core Crimp | Insulation Crimp |
|---|---|---|---|---|---|---|---|
| I | 13587474 | J-35616-64B (L-BU) | J-38125-215A | Not Available | Not Available | P | P |
| II | 13327120 | J-35616-64B (L-BU) | J-38125-215A | SAIT-A03T-M064 | 14 | P | P |

### *K41 Front and Rear Parking Assist Control Module X3*

| Pin | Size | Color | Circuit | Function | Terminal Type ID | Option |
|---|---|---|---|---|---|---|
| 1 | 0.5 | YE/VT | 5213 | Front Parking Left/Right/Mid Sensor | I | - |
| 2-3 | - | - | - | Not Occupied | - | - |
| 4 | 0.5 | VT/WH | 5215 | Front Parking Left Corner Sensor | II | - |
| 5 | 0.5 | YE/GY | 5216 | Front Parking Left Mid Sensor | II | - |
| 6-7 | - | - | - | Not Occupied | - | - |
| 8 | 0.5 | BK/D-BU | 5214 | Front Parking Sensor Low Reference | II | - |
| 9-10 | - | - | - | Not Occupied | - | - |
| 11 | 0.5 | WH/GY | 5217 | Front Parking Right Corner Sensor | II | - |
| 12 | 0.5 | VT/GY | 5218 | Front Parking Right Mid Sensor | II | - |
| 13-14 | - | - | - | Not Occupied | - | - |

## K44 Power Take-Off Control Module X1

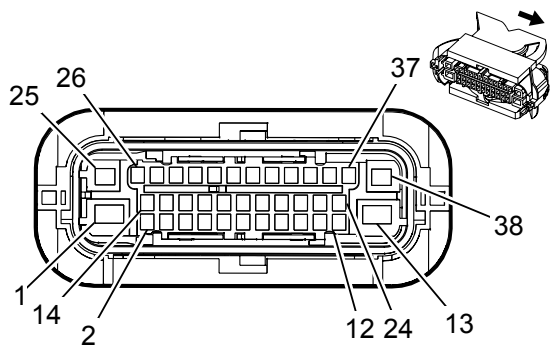


### Connector Part Information

Harness Type: Engine

OEM Connector: 15498534

Service Connector: No SDC/FSU

Description: 38-Way F 1.5 CTS, 2.8 MCP, 4.8 MCP Series, Sealed (BK)

### *Terminal Part Information*

| Terminal Type ID | Terminated Lead | Diagnostic Test Probe | Terminal Removal Tool | Service Terminal | Tray | Core Crimp | Insulation Crimp |
|---|---|---|---|---|---|---|---|
| I | Pending | Pending | Pending | Not Available | Not Available | Not Available | Not Available |
| II | Pending | J-35616-42 (RD) | J-38125-11A | Not Available | Not Available | Not Available | Not Available |

### *K44 Power Take-Off Control Module X1*

| Pin | Size | Color | Circuit | Function | Terminal Type ID | Option |
|---|---|---|---|---|---|---|
| 1 | 0.75 | RD/D-BU | 4540 | Battery Positive Voltage | I | - |
| 2-12 | - | - | - | Not Occupied | - | - |
| 13 | 1.5 | BK/WH | 451 | Signal Ground | II | - |
| 14 | 0.5 | WH/D-BU | 5986 | Serial Data Communication Enable | I | - |
| 15 | 0.5 | L-GN/WH | 488 | Power Take Off Enable Switch | I | - |
| 16-17 | - | - | - | Not Occupied | - | - |
| 18 | 0.5 | BN/L-GN | 4311 | Power Take Off Enable In Cab Switch Normally Closed Signal | I | - |
| 19-24 | - | - | - | Not Occupied | - | - |
| 25 | 0.75 | BN/WH | 6085 | Power Take Off Remote Engine Start Switch Signal | I | - |
| 26 | 0.5 | D-BU | 2500 | High Speed GMLAN Serial Data (+) (1) | I | - |
| 27 | 0.5 | D-BU | 2500 | High Speed GMLAN Serial Data (+) (1) | I | - |
| 28 | 0.5 | WH | 2501 | High Speed GMLAN Serial Data (-) (1) | I | - |
| 29 | 0.5 | WH | 2501 | High Speed GMLAN Serial Data (-) (1) | I | - |
| 30-38 | - | - | - | Not Occupied | - | - |

## K44 Power Take-Off Control Module X2

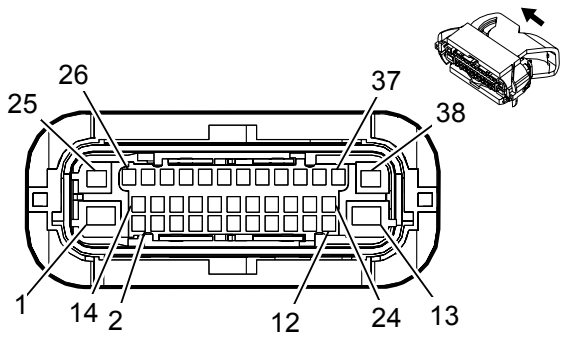


### Connector Part Information

Harness Type: Engine

OEM Connector: 13655518

Service Connector: 13582125

Description: 38-Way F 1.5 CTS, 2.8 MCP, 4.8 MCP Series, Sealed (BK)

### *Terminal Part Information*

| Terminal Type ID | Terminated Lead | Diagnostic Test Probe | Terminal Removal Tool | Service Terminal | Tray | Core Crimp | Insulation Crimp |
|---|---|---|---|---|---|---|---|
| I | Pending | Pending | Pending | Not Available | Not Available | Not Available | Not Available |

### *K44 Power Take-Off Control Module X2*

| Pin | Size | Color | Circuit | Function | Terminal Type ID | Option |
|---|---|---|---|---|---|---|
| 1-7 | - | - | - | Not Occupied | - | - |
| 8 | 0.75 | YE | 2522 | Power Take Off Status Signal | I | - |
| 9-10 | - | - | - | Not Occupied | - | - |
| 11 | 0.5 | VT/D-BU | 2562 | Power Take Off Relay Coil Control | I | - |
| 12-27 | - | - | - | Not Occupied | - | - |
| 28 | 0.5 | WH/L-GN | 6142 | Power Take Off Engine Shutdown Signal | I | - |
| 29-34 | - | - | - | Not Occupied | - | - |
| 35 | 0.5 | D-BU/GY | 6089 | Power Take Off Remote Switch Set Signal (1) | I | - |
| 36 | 0.75 | D-BU/BN | 4408 | Power Take Off Enable Signal | I | - |
| 37 | 0.75 | BN | 6381 | Power Take Off Relay Engage Signal | I | - |
| 38 | - | - | - | Not Occupied | - | - |

## K48 Body Control Module - Auxiliary X1

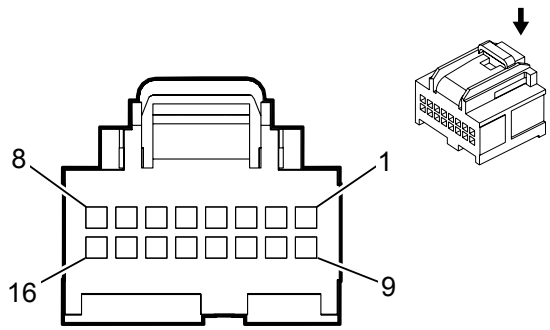


### Connector Part Information

Harness Type: Instrument Panel

OEM Connector: 13819409

Service Connector: 13582576

Description: 16-Way F 0.64 OCS Series (BK)

### *Terminal Part Information*

| Terminal Type ID | Terminated Lead | Diagnostic Test Probe | Terminal Removal Tool | Service Terminal | Tray | Core Crimp | Insulation Crimp |
|---|---|---|---|---|---|---|---|
| I | Not Available | Not Available | Not Available | Not Available | Not Available | Not Available | Not Available |

### *K48 Body Control Module - Auxiliary X1*

| Pin | Size | Color | Circuit | Function | Terminal Type ID | Option |
|---|---|---|---|---|---|---|
| 1 | 0.35<br>0.35 | D-BU<br>GY/YE | 655<br>5149 | Cellular Telephone Microphone Signal<br>Voice Recognition Audio Signal | I | - |
| 2 | 0.35<br>0.35 | BK/BN<br>BK/GY | 654<br>5152 | Cellular Telephone Microphone Low Reference<br>Voice Recognition Audio Low Reference | I | - |
| 3-4 | - | - | - | Not Occupied | - | - |
| 5 | 0.35 | WH/D-BU | 5986 | Serial Data Communication Enable | I | - |
| 6 | - | - | - | Not Occupied | - | - |
| 7 | 0.75 | RD/VT | 340 | Battery Positive Voltage | I | - |
| 8 | 0.75 | BK | 2550 | Ground | I | - |
| 9 | 0.5 | L-GN/WH | 7527 | Linear Interconnect Network Bus 5 | I | - |
| 10 | - | - | - | Not Occupied | - | - |
| 11 | 0.5 | D-BU | 2500 | High Speed GMLAN Serial Data (+) (1) | I | - |
| 12 | 0.5 | WH | 2501 | High Speed GMLAN Serial Data (-) (1) | I | - |
| 13 | 0.5 | D-BU | 2500 | High Speed GMLAN Serial Data (+) (1) | I | - |
| 14 | 0.5 | WH | 2501 | High Speed GMLAN Serial Data (-) (1) | I | - |
| 15-16 | - | - | - | Not Occupied | - | - |

| | | | | | | |
|---|---|---|---|---|---|---|
| 15-16 | - | - | - | Not Occupied | - | - |

## K48 Body Control Module - Auxiliary X2

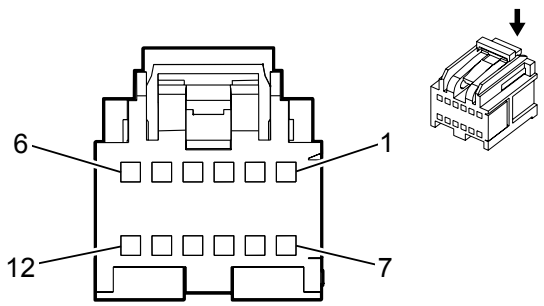


### Connector Part Information

Harness Type: Instrument Panel

OEM Connector: 13782626

Service Connector: 19329259

Description: 12-Way F 0.64 OCS Series (GY)

### *Terminal Part Information*

| Terminal Type ID | Terminated Lead | Diagnostic Test Probe | Terminal Removal Tool | Service Terminal | Tray | Core Crimp | Insulation Crimp |
|---|---|---|---|---|---|---|---|
| I | Not Available | Not Available | Not Available | Not Available | Not Available | Not Available | Not Available |

### *K48 Body Control Module - Auxiliary X2*

| Pin | Size | Color | Circuit | Function | Terminal Type ID | Option |
|---|---|---|---|---|---|---|
| 1 | 0.35 | WH/VT | 3999 | MOST Control | I | - |
| 2 | 0.5 | WH/L-GN | 3997 | MOST Serial Data (-) | I | - |
| 3 | 0.5 | GY/VT | 3998 | MOST Serial Data (+) | I | - |
| 4 | - | - | - | Not Occupied | - | - |
| 5 | 0.35 | GY/YE | 6972 | Camera Signal #2 + | I | - |
| 6 | 0.35 | WH/D-BU | 6973 | Camera Signal #2 | I | - |
| 7 | - | - | - | Not Occupied | - | - |
| 8 | 0.5 | GY/VT | 3998 | MOST Serial Data (+) | I | - |
| 9 | 0.5 | WH/L-GN | 3997 | MOST Serial Data (-) | I | - |
| 10-12 | - | - | - | Not Occupied | - | - |

## K48 Infotainment Faceplate Control Module

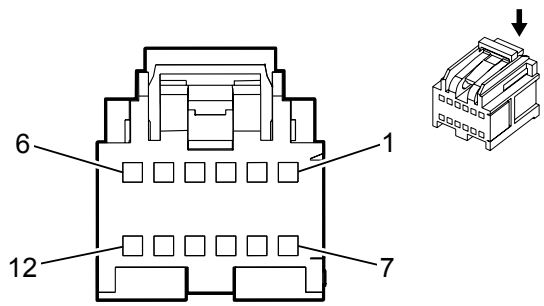


### Connector Part Information

Harness Type: Instrument Panel

OEM Connector: 13782626

Service Connector: Pending

Description: 12-Way F 0.64 OCS Series (GY)

### *Terminal Part Information*

| Terminal Type ID | Terminated Lead | Diagnostic Test Probe | Terminal Removal Tool | Service Terminal | Tray | Core Crimp | Insulation Crimp |
|---|---|---|---|---|---|---|---|
| I | Pending | Pending | Pending | Not Available | Not Available | Not Available | Not Available |

### *K48 Infotainment Faceplate Control Module*

| Pin | Size | Color | Circuit | Function | Terminal Type ID | Option |
|---|---|---|---|---|---|---|
| 1 | 0.35 | WH/VT | 3999 | MOST Control | I | - |
| 2 | 0.5 | WH/L-GN | 3997 | MOST Serial Data (-) | I | - |
| 3 | 0.5 | GY/VT | 3998 | MOST Serial Data (+) | I | - |
| 4 | - | - | - | Not Occupied | - | - |
| 5 | 0.35 | GY/YE | 6972 | Camera Signal #2 + | I | - |
| 6 | 0.35 | WH/D-BU | 6973 | Camera Signal #2 | I | - |
| 7 | - | - | - | Not Occupied | - | - |
| 8 | 0.5 | GY/VT | 3998 | MOST Serial Data (+) | I | - |
| 9 | 0.5 | WH/L-GN | 3997 | MOST Serial Data (-) | I | - |
| 10-12 | - | - | - | Not Occupied | - | - |

## K55D Seat Blower Assembly - Driver Cushion

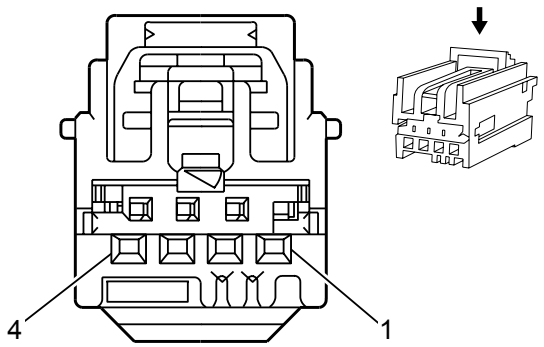


### Connector Part Information

Harness Type: Driver Seat Cushion

OEM Connector: 7283-9016-30

Service Connector: 19149305

Description: 4-Way F  (BK)

### *Terminal Part Information*

| Terminal Type ID | Terminated Lead | Diagnostic Test Probe | Terminal Removal Tool | Service Terminal | Tray | Core Crimp | Insulation Crimp |
|---|---|---|---|---|---|---|---|
| I | Not Available | Not Available | Not Available | Not Available | Not Available | Not Available | Not Available |

### *K55D Seat Blower Assembly - Driver Cushion*

| Pin | Size | Color | Circuit | Function | Terminal Type ID | Option |
|---|---|---|---|---|---|---|
| 1 | 0.75 | RD/L-GN | 5140 | Battery Positive Voltage | I | - |
| 2 | 0.75 | BN/VT | 2077 | Driver Heated Seat Element Supply Voltage | I | - |
| 3 | 0.35 | L-GN/VT | 5906 | Driver Seat Vent Motor Control (1) | I | - |
| 4 | 0.75 | BK | 1150 | Ground | I | - |

## K55P Seat Blower Assembly - Passenger Cushion

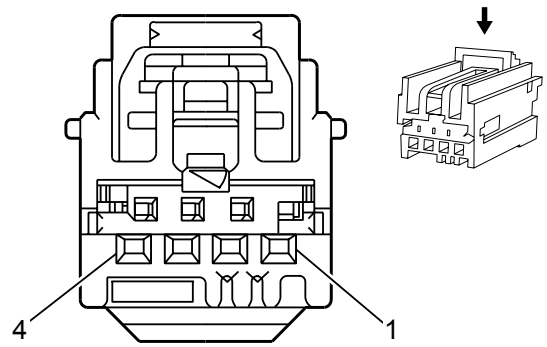


### Connector Part Information

Harness Type: Passenger Seat Cushion

OEM Connector: 7283-9016-30

Service Connector: 19149305

Description: 4-Way F  (BK)

### *Terminal Part Information*

| Terminal Type ID | Terminated Lead | Diagnostic Test Probe | Terminal Removal Tool | Service Terminal | Tray | Core Crimp | Insulation Crimp |
|---|---|---|---|---|---|---|---|
| I | Not Available | Not Available | Not Available | Not Available | Not Available | Not Available | Not Available |

### *K55P Seat Blower Assembly - Passenger Cushion*

| Pin | Size | Color | Circuit | Function | Terminal Type ID | Option |
|---|---|---|---|---|---|---|
| 1 | 0.75 | RD/L-GN | 6140 | Battery Positive Voltage | I | - |
| 2 | 0.75 | BN/L-BU | 2479 | Passenger Heated Seat Element Supply Voltage | I | - |
| 3 | 0.35 | VT/WH | 5908 | Passenger Seat Vent Motor Control (1) | I | - |
| 4 | 0.75 | BK | 1250 | Ground | I | - |

## K67 Trailer Brake Control Module

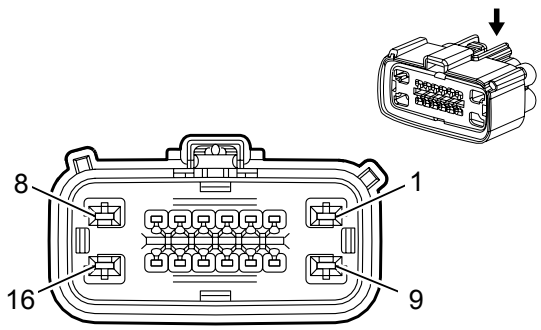


### Connector Part Information

Harness Type: Chassis

OEM Connector: 13991106

Service Connector: Service by Harness - See Part Catalog

Description: 16-Way F 1.5, 2.8 Series, Sealed (D-GY)

### *Terminal Part Information*

| Terminal Type ID | Terminated Lead | Diagnostic Test Probe | Terminal Removal Tool | Service Terminal | Tray | Core Crimp | Insulation Crimp |
|---|---|---|---|---|---|---|---|
| I | 13576375 | J-35616-35 (VT) | J-38125-12A | 1326030-8 | 17 | 4 | D |
| II | Pending | J-35616-14 (GN) | J-38125-217 | Not Available | Not Available | E | 2 |

### *K67 Trailer Brake Control Module*

| Pin | Size | Color | Circuit | Function | Terminal Type ID | Option |
|---|---|---|---|---|---|---|
| 1 | 2.5 | RD/L-GN | 242 | Battery Positive Voltage | I | - |
| 2 | 0.5 | WH/BK | 2223 | Trailer Brake Control Signal | II | - |
| 3-4 | - | - | - | Not Occupied | - | - |
| 5 | 0.5 | YE/BK | 2224 | Trailer Brake Enable Signal | II | - |
| 6-7 | - | - | - | Not Occupied | - | - |
| 8 | 2.5 | D-BU | 47 | Trailer Auxiliary Supply Voltage | I | - |
| 9 | 2.5 | BK | 1750 | Ground | I | - |
| 10-11 | - | - | - | Not Occupied | - | - |
| 12 | 0.5 | GY | 2225 | Trailer Brake Current Feedback Signal | II | - |
| 13 | - | - | - | Not Occupied | - | - |
| 14 | 0.5 | D-BU | 47 | Trailer Auxiliary Supply Voltage | II | - |
| 15-16 | - | - | - | Not Occupied | - | - |

## K69 Transfer Case Control Module X1

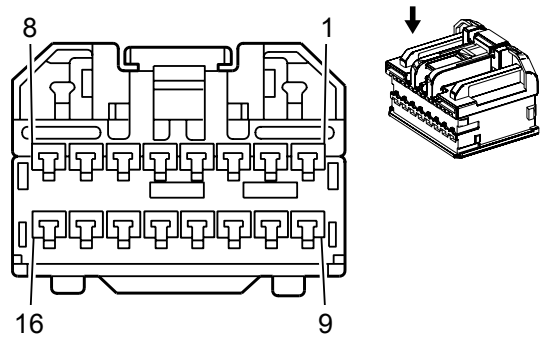


### Connector Part Information

Harness Type: Brake Clutch Jumper

OEM Connector: 13547237

Service Connector: 88988778

Description: 16-Way F 1.5 Series (GY)

### *Terminal Part Information*

| Terminal Type ID | Terminated Lead | Diagnostic Test Probe | Terminal Removal Tool | Service Terminal | Tray | Core Crimp | Insulation Crimp |
|---|---|---|---|---|---|---|---|
| I | Pending | J-35616-2A (GY) | J-38125-553 | 15496302 | 5 | E | A |
| II | Pending | J-35616-2A (GY) | J-38125-553 | 8240-0127 | 22 | E | C |
| III | Pending | J-35616-2A (GY) | J-38125-553 | 8240-0128 | 22 | C | A |

### *K69 Transfer Case Control Module X1*

| Pin | Size | Color | Circuit | Function | Terminal Type ID | Option |
|---|---|---|---|---|---|---|
| 1 | 0.5 | YE/BK | 7478 | Rotary Position Sensor Return | I | - |
| 2 | 0.5 | WH/L-GN | 7479 | Rotary Position Sensor Signal | II | - |
| 3 | 0.35 | YE | 7474 | Incremental Encoder Direction Signal | II | - |
| 4 | 0.5 | GY/BK | 1570 | Front Axle Actuator Control | I | - |
| 5 | 0.35 | D-BU/GY | 7473 | Incremental Encoder Impulse Signal | II | - |
| 6 | 0.35 | GY/RD | 6029 | Four Wheel Drive Mode Switch 5 Volt Reference | I | - |
| 7 | 0.35 | D-BU/YE | 1693 | Four Wheel Drive Switch Signal | I | - |
| 8 | - | - | - | Not Occupied | - | - |
| 9 | 0.5 | WH/RD | 7477 | Rotary Position Sensor Supply 5V | II | - |
| 10 | 0.35 | WH/L-GN | 7475 | Incremental Encoder Sensor (8V) Supply | II | - |
| 11 | 0.35 | VT | 7476 | Incremental Encoder Sensor Return | II | - |
| 12 | 0.5 | YE/WH | 1695 | Four Wheel Drive Wheel Lock Indicator | I | - |
| 13 | 1 | YE/BN | 1569 | Transfer Case Lock Solenoid Control | III | - |

| | | | | | | |
|---|---|---|---|---|---|---|
| 14-16 | - | - | - | Not Occupied | - | - |

## K69 Transfer Case Control Module X2

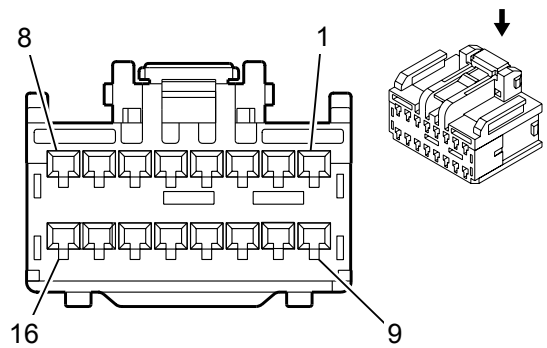


### Connector Part Information

Harness Type: Brake Clutch Jumper

OEM Connector: 15489823

Service Connector: 15134091

Description: 16-Way F 1.5 Series (BK)

### *Terminal Part Information*

| Terminal Type ID | Terminated Lead | Diagnostic Test Probe | Terminal Removal Tool | Service Terminal | Tray | Core Crimp | Insulation Crimp |
|---|---|---|---|---|---|---|---|
| I | Pending | J-35616-2A (GY) | J-38125-553 | 15496302 | 5 | E | A |

### *K69 Transfer Case Control Module X2*

| Pin | Size | Color | Circuit | Function | Terminal Type ID | Option |
|---|---|---|---|---|---|---|
| 1-2 | - | - | - | Not Occupied | - | - |
| 3 | 0.35 | VT/WH | 1565 | 4 LO Indicator Control | I | - |
| 4 | 0.35 | VT/L-GN | 1739 | Run/Crank Ignition 1 Voltage | I | - |
| 5 | - | - | - | Not Occupied | - | - |
| 6 | 0.35 | VT/YE | 5985 | Accessory Wakeup Serial Data | I | - |
| 7 | 0.5 | D-BU | 2500 | High Speed GMLAN Serial Data (+) (1) | I | - |
| 8 | 0.5 | WH | 2501 | High Speed GMLAN Serial Data (-) (1) | I | - |
| 9-10 | - | - | - | Not Occupied | - | - |
| 11 | 0.35 | GY/L-GN | 1561 | AWD Indicator Control | I | - |
| 12 | 0.35 | BN | 1560 | Neutral Indicator Control | I | - |
| 13 | 0.35 | L-GN/BK | 1563 | 2 HI Indicator Control | I | - |
| 14 | 0.35 | BN/BK | 1566 | 4 HI Indicator Control | I | - |
| 15 | 0.5 | D-BU | 2500 | High Speed GMLAN Serial Data (+) (1) | I | - |
| 16 | 0.5 | WH | 2501 | High Speed GMLAN Serial Data (-) (1) | I | - |

## K69 Transfer Case Control Module X3

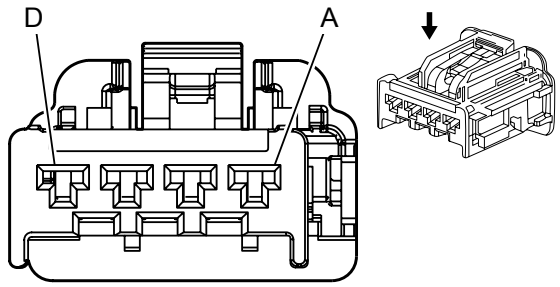


### Connector Part Information

Harness Type: Brake Clutch Jumper

OEM Connector: 15466671

Service Connector: 19149301

Description: 4-Way F 280 GT Series (L-GY)

### *Terminal Part Information*

| Terminal Type ID | Terminated Lead | Diagnostic Test Probe | Terminal Removal Tool | Service Terminal | Tray | Core Crimp | Insulation Crimp |
|---|---|---|---|---|---|---|---|
| I | Pending | J-35616-4A (PU) | J-38125-553 | 15304713 | 19 | F | D |

### *K69 Transfer Case Control Module X3*

| Pin | Size | Color | Circuit | Function | Terminal Type ID | Option |
|---|---|---|---|---|---|---|
| A | 4 | YE/VT | 1553 | Transfer Case Motor Counter Clockwise Control | I | - |
| B | 4 | YE/GY | 1552 | Transfer Case Motor Clockwise Control | I | - |
| C | 3 | RD/GY | 1342 | Battery Positive Voltage | I | - |
| D | 3 | BK | 550 | Ground | I | - |

## K71 Transmission Control Module

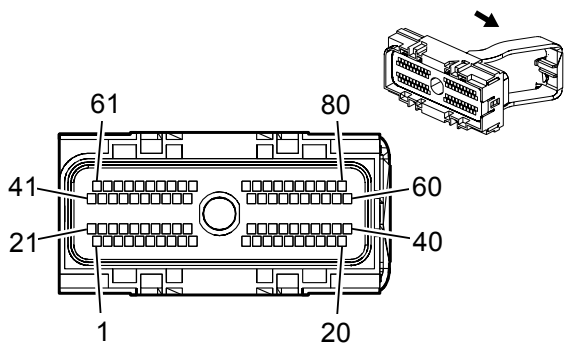


### Connector Part Information

Harness Type: Engine

OEM Connector: 15499493

Service Connector: 88988938

Description: 80-Way F 1.5 Series, Sealed (BK)

### *Terminal Part Information*

| Terminal Type ID | Terminated Lead | Diagnostic Test Probe | Terminal Removal Tool | Service Terminal | Tray | Core Crimp | Insulation Crimp |
|---|---|---|---|---|---|---|---|
| I | Pending | Pending | Pending | Not Available | Not Available | Not Available | Not Available |
| II | Pending | J-35616-14 (GN) | J-38125-217 | Not Available | Not Available | E | 2 |

### *K71 Transmission Control Module*

| Pin | Size | Color | Circuit | Function | Terminal Type ID | Option |
|---|---|---|---|---|---|---|
| 1 | - | - | - | Not Occupied | - | - |
| 2 | 0.5 | VT/BK | 2139 | Run/Crank Ignition 1 Voltage | II | - |
| 3-5 | - | - | - | Not Occupied | - | - |
| 6 | 0.5 | D-BU | 2500 | High Speed GMLAN Serial Data (+) (1) | II | - |
| 7-8 | - | - | - | Not Occupied | - | - |
| 9 | 0.75 | BK/WH | 451 | Signal Ground | I | - |
| 10 | 0.75 | RD/L-GN | 1840 | Battery Positive Voltage | I | - |
| 11 | 0.75 | YE | 1228 | Transmission Force Motor Supply Voltage (1) | I | - |
| 12-13 | - | - | - | Not Occupied | - | - |
| 14 | 0.5 | GY | 773 | Transmission Position Switch Bit 3 Signal | II | - |
| 15-16 | - | - | - | Not Occupied | - | - |
| 17 | 0.75 | PU/GY | 1224 | Transmission Fluid Pressure Switch Signal Bit 1 | I | - |
| 18-19 | - | - | - | Not Occupied | - | - |
| 20 | 0.5 | BK/D-BU | 1984 | Transmission Turbine Speed Switch Low Reference | II | - |

| | | | | | | |
|---|---|---|---|---|---|---|
| 21-24 | - | - | - | Not Occupied | - | - |
| 25 | 0.5 | BN/VT | 6399 | Replicated TOS Signal | II | - |
| 26 | - | - | - | Not Occupied | - | - |
| 27 | 0.5 | WH | 2501 | High Speed GMLAN Serial Data (-) (1) | II | - |
| 28-32 | - | - | - | Not Occupied | - | - |
| 33 | 0.75 | YE/BK | 1223 | 2 Shift Solenoid Valve Control | I | - |
| 34 | 0.5 | WH | 776 | Transmission Position Switch Parity Bit Signal | II | - |
| 35 | - | - | - | Not Occupied | - | - |
| 36 | 0.75 | BN/BK | 2469 | Transmission Force Motor Return (2) | I | - |
| 37-39 | - | - | - | Not Occupied | - | - |
| 40 | 0.5 | BK/L-GN | 822 | Vehicle Speed Sensor Low Reference | II | - |
| 41-42 | - | - | - | Not Occupied | - | - |
| 43 | 0.5 | VT/YE | 5985 | Accessory Wakeup Serial Data | II | - |
| 44-46 | - | - | - | Not Occupied | - | - |
| 47 | 0.5 | WH | 2501 | High Speed GMLAN Serial Data (-) (1) | II | - |
| 48-50 | - | - | - | Not Occupied | - | - |
| 51 | 0.75 | WH/BN | 2527 | Shift Solenoid Control (5) | I | - |
| 52 | 0.75 | WH/L-GN | 1222 | 1 Shift Solenoid Valve Control | I | - |
| 53 | 0.5 | YE | 772 | Transmission Position Switch Bit 2 Signal | II | - |
| 54 | 0.75 | YE/BK | 1227 | Transmission Temperature Sensor Signal | I | - |
| 55 | 0.75 | VT/BK | 1229 | Transmission Force Motor Return (1) | I | - |
| 56 | - | - | - | Not Occupied | - | - |
| 57 | 0.75 | WH/BN | 1226 | Transmission Fluid Pressure Switch Signal Bit 3 | I | - |
| 58 | 0.75 | BK/D-BU | 2762 | Transmission Fluid Temperature Sensor Low Reference | I | - |
| 59 | - | - | - | Not Occupied | - | - |
| 60 | 0.5 | VT/WH | 821 | Vehicle Speed Sensor Signal | II | - |
| 61-62 | - | - | - | Not Occupied | - | - |
| 63 | 0.5 | VT/BK | 2139 | Run/Crank Ignition 1 Voltage | II | - |
| 64-65 | - | - | - | Not Occupied | - | - |
| 66 | 0.5 | D-BU | 2500 | High Speed GMLAN Serial Data (+) (1) | II | - |
| 67-68 | - | - | - | Not Occupied | - | - |

| | | | | | | |
|---|---|---|---|---|---|---|
| 69 | 0.75 | BK/WH | 451 | Signal Ground | I | - |
| 70 | 0.75 | RD/L-GN | 1840 | Battery Positive Voltage | I | - |
| 71 | 0.75 | BN/VT | 323 | Shift Solenoid Supply Voltage | I | - |
| 72 | - | - | - | Not Occupied | - | - |
| 73 | 0.5 | BN/WH | 771 | Transmission Position Switch Bit 1 Signal | II | - |
| 74 | 0.75 | L-GN/WH | 1530 | Transmission Mainline Pressure Solenoid Control | I | - |
| 75-76 | - | - | - | Not Occupied | - | - |
| 77 | 0.75 | L-GN/BK | 2529 | Transmission Fluid Pressure Switch Signal Bit 4 | I | - |
| 78 | 0.75 | BN/VT | 418 | Torque Converter Clutch PWM Solenoid Control | I | - |
| 79 | 0.75 | L-GN/VT | 1225 | Transmission Fluid Pressure Switch Signal Bit 2 | I | - |
| 80 | 0.5 | WH/BK | 1983 | Transmission Turbine Speed Switch Signal | II | - |

## K71 Transmission Control Module (M5U)

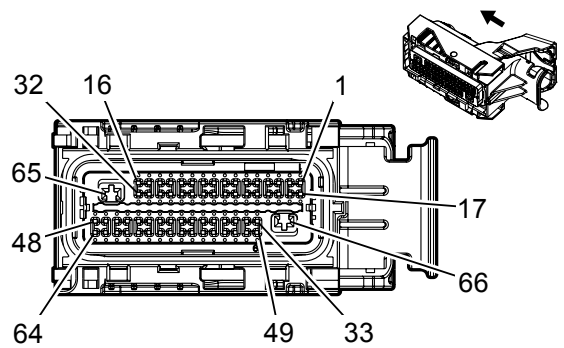


### Connector Part Information

Harness Type: Engine

OEM Connector: 13965710

Service Connector: Not Available

Description: 66-Way F 0.64, 2.8 Series, Sealed (BK with BK Terminal Position Assurance)

### *Terminal Part Information*

| Terminal Type ID | Terminated Lead | Diagnostic Test Probe | Terminal Removal Tool | Service Terminal | Tray | Core Crimp | Insulation Crimp |
|---|---|---|---|---|---|---|---|
| I | Not Available | J-35616-64B | J-38125-12A | Not Available | Not Available | Not Available | Not Available |
| II | 13579769 | J-35616-4A (PU) | J-38125-11A | 7116-4151-02 | 9 | Not Available | Not Available |

### *K71 Transmission Control Module (M5U)*

| Pin | Size | Color | Circuit | Function | Terminal Type ID | Option |
|---|---|---|---|---|---|---|
| 1 | 0.5 | WH/D-BU | 4507 | Transmission Clutch H Control | I | - |
| 2 | 0.5<br>0.75 | D-BU<br>D-BU | 6401<br>6401 | Clutch B Control<br>Clutch B Control | I | - |
| 3 | 0.5 | GY/L-GN | 6403 | Clutch D Control | I | - |
| 4-6 | - | - | - | Not Occupied | - | - |
| 7 | 0.5<br>0.75 | YE/L-GN<br>YE/L-GN | 4170<br>4170 | Transmission Sensor B Voltage Reference 9V<br>Transmission Sensor B Voltage Reference 9V | I | - |
| 8 | 0.5<br>0.75 | YE/D-BU<br>YE/D-BU | 4171<br>4171 | Transmission Sensor A Voltage Reference 9V<br>Transmission Sensor A Voltage Reference 9V | I | - |
| 9 | 0.75 | WH/BN | 1226 | Transmission Fluid Pressure Switch Signal Bit 3 | I | - |
| 10 | 0.75 | L-GN/BK | 2529 | Transmission Fluid Pressure Switch Signal Bit 4 | I | - |
| 11-12 | - | - | - | Not Occupied | - | - |
| 13 | 0.5 | L-GN/VT | 4510 | Transmission Intermediate Speed Signal | I | - |
| 14 | 0.5<br>0.75 | GY/D-BU<br>GY/D-BU | 6358<br>6358 | Output Speed Signal<br>Output Speed Signal | I | - |
| 15 | 0.5 | L-GN/YE | 6353 | Input Speed Signal | I | - |

| | | | | | | |
|---|---|---|---|---|---|---|
| 15 | 0.5<br>0.75 | L-GN/YE<br>L-GN/YE | 6353<br>6353 | Input Speed Signal<br>Input Speed Signal | I | - |
| 16 | - | - | - | Not Occupied | - | - |
| 17 | 0.5<br>0.75 | WH<br>WH | 4508<br>4508 | Transmission Clutch G Control<br>Transmission Clutch G Control | I | - |
| 18 | 0.5<br>0.75 | BN<br>BN | 6400<br>6400 | Clutch A Control<br>Clutch A Control | I | - |
| 19 | 0.5<br>0.75 | GY<br>GY | 6402<br>6402 | Clutch C Control<br>Clutch C Control | I | - |
| 20 | 0.5 | YE/BN | 6404 | Clutch E Control | I | - |
| 21 | 0.5<br>0.75 | L-GN/WH<br>WH/BN | 6380<br>2527 | TCC On/Off Solenoid A Control<br>Shift Solenoid Control (5) | I | - |
| 22 | 0.5 | YE/BN | 6210 | TCC On/Off Solenoid B Control | I | - |
| 23 | 0.75 | WH/L-GN | 1222 | 1 Shift Solenoid Valve Control | I | - |
| 24 | 0.75 | YE/BK | 1223 | 2 Shift Solenoid Valve Control | I | - |
| 25 | 0.5 | BK/GY | 3927 | IMS Mode Switch Return | I | - |
| 26 | 0.5 | WH/BK | 5983 | PRNDL C Signal | I | - |
| 27 | 0.5 | VT/WH | 5981 | PRNDL A Signal | I | - |
| 28 | 0.5<br>0.75 | BK/BN<br>BK/BN | 586<br>586 | Transmission Oil Temperature Sensor Low Reference<br>Transmission Oil Temperature Sensor Low Reference | I | - |
| 29-32 | - | - | - | Not Occupied | - | - |
| 33 | 0.75 | L-GN/GY | 6387 | Transmission High Side Driver #1 Signal Driver | I | - |
| 34 | - | - | - | Not Occupied | - | - |
| 35 | 0.5 | VT/BK | 2139 | Run/Crank Ignition 1 Voltage | I | - |
| 36 | 0.75 | L-GN/VT | 1225 | Transmission Fluid Pressure Switch Signal Bit 2 | I | - |
| 37 | 0.5 | D-BU | 2500 | High Speed GMLAN Serial Data (+) (1) | I | - |
| 38 | 0.5 | WH | 2501 | High Speed GMLAN Serial Data (-) (1) | I | - |
| 39-46 | - | - | - | Not Occupied | - | - |
| 47 | 0.5 | GY/YE | 4169 | PRNDL S Signal | I | - |
| 48 | - | - | - | Not Occupied | - | - |
| 49 | 0.75 | GY/BN | 6388 | Transmission High Side Driver #2 Signal | I | - |
| 50 | - | - | - | Not Occupied | - | - |
| 51 | 0.5 | VT/YE | 5985 | Accessory Wakeup Serial Data | I | - |

| | | | | | | |
|---|---|---|---|---|---|---|
| 52 | 0.75 | PU/GY | 1224 | Transmission Fluid Pressure Switch Signal Bit 1 | I | - |
| 53 | 0.5 | D-BU | 2500 | High Speed GMLAN Serial Data (+) (1) | I | - |
| 54 | 0.5 | WH | 2501 | High Speed GMLAN Serial Data (-) (1) | I | - |
| 55 | 0.5 | GY/WH | 4168 | PRNDL P Signal | I | - |
| 56-57 | - | - | - | Not Occupied | - | - |
| 58 | 0.5 | GY/BN | 5982 | PRNDL B Signal | I | - |
| 59 | 0.5 | GY/WH | 4168 | PRNDL P Signal | I | - |
| 60 | 0.5 | WH/BK | 5983 | PRNDL C Signal | I | - |
| 61 | 0.5 | GY/BN | 5982 | PRNDL B Signal | I | - |
| 62 | 0.5 | VT/WH | 5981 | PRNDL A Signal | I | - |
| 63 | 0.5<br>0.75 | BN/WH<br>BN/WH | 585<br>585 | Transmission Oil Temperature Sensor Signal<br>Transmission Oil Temperature Sensor Signal | I | - |
| 64 | - | - | - | Not Occupied | - | - |
| 65 | 0.75 | BK/WH | 451 | Signal Ground | II | - |
| 66 | 0.75 | RD/L-GN | 1840 | Battery Positive Voltage | II | - |

## K73 Telematics Communication Interface Control Module X1

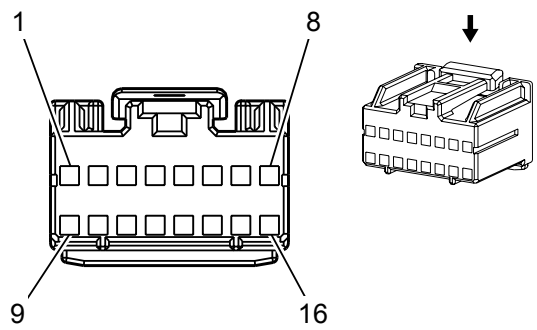


### Connector Part Information

Harness Type: Instrument Panel

OEM Connector: 15431362

Service Connector: 15306351

Description: 16-Way F Micro Pack 100A Series (NA)

### *Terminal Part Information*

| Terminal Type ID | Terminated Lead | Diagnostic Test Probe | Terminal Removal Tool | Service Terminal | Tray | Core Crimp | Insulation Crimp |
|---|---|---|---|---|---|---|---|
| I | Pending | J-35616-16 (L-GN) | J-38125-559 | 15445905 | 23 | J | J |

### *K73 Telematics Communication Interface Control Module X1*

| Pin | Size | Color | Circuit | Function | Terminal Type ID | Option |
|---|---|---|---|---|---|---|
| 1 | 0.5 | L-GN | 5060 | Low Speed GMLAN Serial Data | I | - |
| 2 | 0.35 | BN/WH | 2517 | Keypad Red LED | I | - |
| 3 | 0.35 | YE/VT | 2516 | Keypad Green LED | I | - |
| 4-5 | - | - | - | Not Occupied | - | - |
| 6 | 0.35 | L-GN/BK | 2515 | Keypad Supply Voltage | I | - |
| 7 | 0.35 | BK | 2550 | Ground | I | - |
| 8-9 | - | - | - | Not Occupied | - | - |
| 10 | 0.5 | D-BU | 2500 | High Speed GMLAN Serial Data (+) (1) | I | - |
| 11 | 0.35 | L-GN/WH | 2514 | Keypad Signal | I | - |
| 12 | 0.5 | WH | 2501 | High Speed GMLAN Serial Data (-) (1) | I | - |
| 13-14 | - | - | - | Not Occupied | - | - |
| 15 | 0.35 | RD/D-BU | 3240 | Battery Positive Voltage | I | - |
| 16 | - | - | - | Not Occupied | - | - |

## K73 Telematics Communication Interface Control Module X2

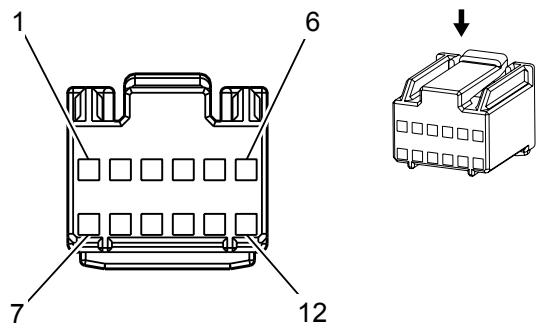


### Connector Part Information

Harness Type: Instrument Panel

OEM Connector: 15431365

Service Connector: 88952886

Description: 12-Way F Micro Pack 100A Series (NA)

### *Terminal Part Information*

| Terminal Type ID | Terminated Lead | Diagnostic Test Probe | Terminal Removal Tool | Service Terminal | Tray | Core Crimp | Insulation Crimp |
|---|---|---|---|---|---|---|---|
| I | Pending | J-35616-16 (L-GN) | J-38125-559 | 15445905 | 23 | J | J |

### *K73 Telematics Communication Interface Control Module X2*

| Pin | Size | Color | Circuit | Function | Terminal Type ID | Option |
|---|---|---|---|---|---|---|
| 1 | 0.35 | YE | 658 | Cellular Telephone Voice Signal | I | - |
| 2 | 0.35 | BK/YE | 659 | Cellular Telephone Voice Low Reference | I | - |
| 3 | 0.5 | D-BU | 2500 | High Speed GMLAN Serial Data (+) (1) | I | - |
| 4 | 0.5 | WH | 2501 | High Speed GMLAN Serial Data (-) (1) | I | - |
| 5 | 0.5 | BARE | 1792 | Drain Wire | I | - |
| 6 | 0.35 | GY/YE | 5149 | Voice Recognition Audio Signal | I | - |
| 7 | 0.35 | WH/D-BU | 5986 | Serial Data Communication Enable | I | - |
| 8 | 0.35 | BARE | 1782 | Drain Wire | I | - |
| 9 | 0.35 | D-BU | 655 | Cellular Telephone Microphone Signal | I | - |
| 10 | 0.35 | BK/BN | 654 | Cellular Telephone Microphone Low Reference | I | - |
| 11 | - | - | - | Not Occupied | - | - |
| 12 | 0.35 | BK/GY | 5152 | Voice Recognition Audio Low Reference | I | - |

## K81L Headlamp High Beam Control Module - Left

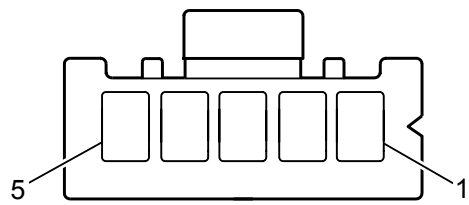


### Connector Part Information

Harness Type:

OEM Connector: XARP-05V

Service Connector: Service by Harness – See Part Catalog

Description: 5 F XA Series (BK)

### *Terminal Part Information*

| Terminal Type ID | Terminated Lead | Diagnostic Test Probe | Terminal Removal Tool | Service Terminal | Tray | Core Crimp | Insulation Crimp |
|---|---|---|---|---|---|---|---|
| I | Not Available | Not Available | Not Available | Not Available | Not Available | Not Available | Not Available |

### *K81L Headlamp High Beam Control Module - Left*

| Pin | Size | Color | Circuit | Function | Terminal Type ID | Option |
|---|---|---|---|---|---|---|
| 1 | 0.5 | GY | - | High Beam Solenoid + | I | Z88 |
| 2 | 0.5 | TN | - | High Beam Solenoid - | I | Z88 |
| 3 | - | - | - | Not Occupied | - | - |
| 4 | 0.5 | BK | 150 | Ground | I | Z88 |
| 5 | 0.5 | BU | 711 | Left Headlamp High Beam Supply Voltage | I | Z88 |

## K81R Headlamp High Beam Control Module - Right

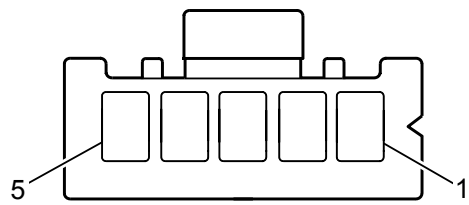


### Connector Part Information

Harness Type:

OEM Connector: XARP-05V

Service Connector: Service by Harness – See Part Catalog

Description: 5 F XA Series (BK)

### *Terminal Part Information*

| Terminal Type ID | Terminated Lead | Diagnostic Test Probe | Terminal Removal Tool | Service Terminal | Tray | Core Crimp | Insulation Crimp |
|---|---|---|---|---|---|---|---|
| I | Not Available | Not Available | Not Available | Not Available | Not Available | Not Available | Not Available |

### *K81R Headlamp High Beam Control Module - Right*

| Pin | Size | Color | Circuit | Function | Terminal Type ID | Option |
|---|---|---|---|---|---|---|
| 1 | 0.5 | GY | - | High Beam Solenoid + | I | Z88 |
| 2 | 0.5 | TN | - | High Beam Solenoid - | I | Z88 |
| 3 | - | - | - | Not Occupied | - | - |
| 4 | 0.5 | BK | 250 | Ground | I | Z88 |
| 5 | 0.5 | BU | 311 | Right Headlamp High Beam Supply Voltage | I | Z88 |

## K84 Keyless Entry Control Module

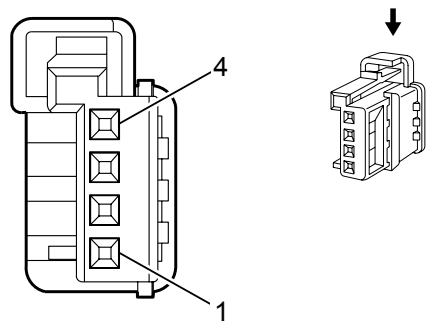


### Connector Part Information

Harness Type: Body

OEM Connector: 10768790

Service Connector: 13584096

Description: 4-Way F 0.64 Micro Quadlok Series (BK)

### *Terminal Part Information*

| Terminal Type ID | Terminated Lead | Diagnostic Test Probe | Terminal Removal Tool | Service Terminal | Tray | Core Crimp | Insulation Crimp |
|---|---|---|---|---|---|---|---|
| I | Pending | J-35616-64B (L-BU) | J-38125-12A | 928999-5 | 15 | H | H |

### *K84 Keyless Entry Control Module*

| Pin | Size | Color | Circuit | Function | Terminal Type ID | Option |
|---|---|---|---|---|---|---|
| 1 | 0.35 | GY | 3273 | Remote Function Actuator Return | I | - |
| 2 | 0.35 | YE/L-GN | 3274 | Remote Function Actuator Transmit Signal | I | - |
| 3 | 0.35 | D-BU/WH | 3275 | Remote Function Actuator Receive Signal | I | - |
| 4 | 0.35 | GY/WH | 3272 | Remote Function Actuator Supply Voltage | I | - |

## K85 Passenger Presence Detection Module

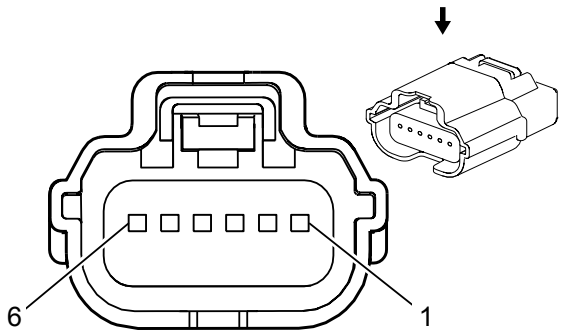


### Connector Part Information

Harness Type: Passenger Seat Cushion

OEM Connector: 31404-6132

Service Connector: No SDC/FSU

Description: 6-Way F 0.64 Series, Sealed (BK)

### *Terminal Part Information*

| Terminal Type ID | Terminated Lead | Diagnostic Test Probe | Terminal Removal Tool | Service Terminal | Tray | Core Crimp | Insulation Crimp |
|---|---|---|---|---|---|---|---|
| I | Not Available | Not Available | Not Available | Not Available | Not Available | Not Available | Not Available |

### *K85 Passenger Presence Detection Module*

| Pin | Size | Color | Circuit | Function | Terminal Type ID | Option |
|---|---|---|---|---|---|---|
| 1 | 0.35 | RD/L-GN | 4440 | Battery Positive Voltage | I | - |
| 2 | 0.35<br>0.5 | L-GN<br>L-GN | 5060<br>5060 | Low Speed GMLAN Serial Data<br>Low Speed GMLAN Serial Data | I | - |
| 3 | - | - | - | Not Occupied | - | - |
| 4 | 0.35 | BK/WH | 2751 | Signal Ground | I | - |
| 5 | 0.35 | L-BU/RD | 5612 | Passenger Seat Belt Tension Sensor Voltage Reference | I | - |
| 6 | 0.35 | VT/OG | 5611 | Passenger Seat Belt Tension Sensor Signal | I | - |

## K89 Immobilizer Control Module

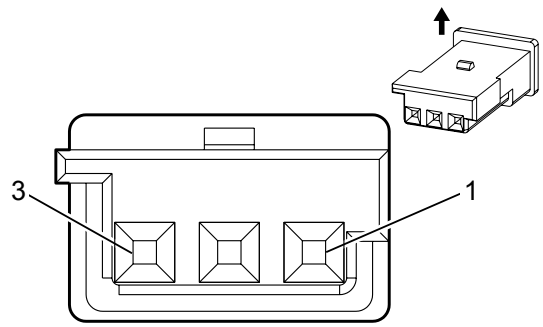


### Connector Part Information

Harness Type:

OEM Connector: 4-1718346-1

Service Connector: 13576530

Description: 3 F Micro Quadlock Series (PU)

### *Terminal Part Information*

| Terminal Type ID | Terminated Lead | Diagnostic Test Probe | Terminal Removal Tool | Service Terminal | Tray | Core Crimp | Insulation Crimp |
|---|---|---|---|---|---|---|---|
| I | Not Available | Not Available | Not Available | Not Available | Not Available | Not Available | Not Available |

### *K89 Immobilizer Control Module*

| Pin | Size | Color | Circuit | Function | Terminal Type ID | Option |
|---|---|---|---|---|---|---|
| 1 | 0.5 | GN/GY | 3277 | Vehicle Anti-Theft System Immobilizer Return | I | - |
| 2 | 0.5 | GN/VT | 7533 | Linear Interconnect Network Bus 11 | I | - |
| 3 | 0.5 | GY/BK | 3276 | Vehicle Anti-Theft System Immobilizer Supply Voltage | I | - |

## K109 Frontview Camera Module

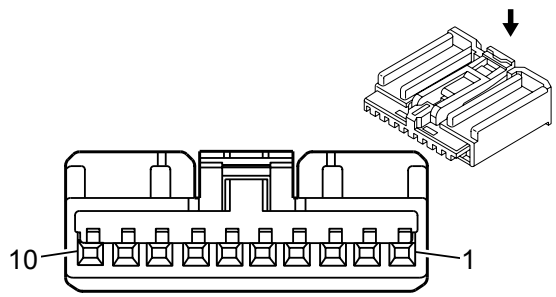


### Connector Part Information

Harness Type: Headliner

OEM Connector: 13574592

Service Connector: 13576634

Description: 10-Way F 0.64 Kaizen Series (BK)

### *Terminal Part Information*

| Terminal Type ID | Terminated Lead | Diagnostic Test Probe | Terminal Removal Tool | Service Terminal | Tray | Core Crimp | Insulation Crimp |
|---|---|---|---|---|---|---|---|
| I | 13327120 | J-35616-64B (L-BU) | J-38125-215A | SAIT-A03T-M064 | 14 | P | P |

### *K109 Frontview Camera Module*

| Pin | Size | Color | Circuit | Function | Terminal Type ID | Option |
|---|---|---|---|---|---|---|
| 1 | 0.5 | BK | 1050 | Ground | I | - |
| 2 | - | - | - | Not Occupied | - | - |
| 3 | 0.5 | RD/L-GN | 3140 | Battery Positive Voltage | I | - |
| 4 | 0.35 | WH | 3152 | Lane Departure Warning Indicator Control | I | - |
| 5-6 | - | - | - | Not Occupied | - | - |
| 7 | 0.35 | L-GN | 5060 | Low Speed GMLAN Serial Data | I | - |
| 8-9 | - | - | - | Not Occupied | - | - |
| 10 | 0.35 | GY/WH | 3153 | Lane Departure Warning Disable Switch Signal | I | - |

## K111 Fuel Pump Driver Control Module

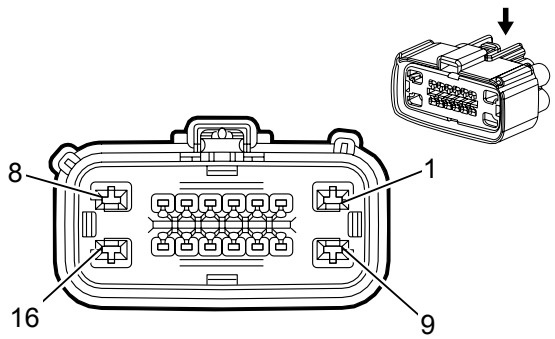


### Connector Part Information

Harness Type: Chassis

OEM Connector: 15500308

Service Connector: Not Available

Description: 16-Way F 1.5, 2.8 Series, Sealed

### *Terminal Part Information*

| Terminal Type ID | Terminated Lead | Diagnostic Test Probe | Terminal Removal Tool | Service Terminal | Tray | Core Crimp | Insulation Crimp |
|---|---|---|---|---|---|---|---|
| I | 13576375 | J-35616-35 (VT) | J-38125-12A | 1326030-8 | 17 | 4 | D |
| II | Not Available | J-35616-14 (GN) | J-38125-217 | Not Available | Not Available | E | 2 |

### *K111 Fuel Pump Driver Control Module*

| Pin | Size | Color | Circuit | Function | Terminal Type ID | Option |
|---|---|---|---|---|---|---|
| 1 | 2.5 | RD/VT | 1940 | Battery Positive Voltage | I | - |
| 2 | 0.5 | GY | 5660 | Fuel Pump Controller Data Out Signal | II | - |
| 3 | - | - | - | Not Occupied | - | - |
| 4 | 0.5 | D-BU/BK | 7493 | High Speed GMLAN Serial Data (+)(3) | II | - |
| 5 | 0.5 | WH | 7494 | High Speed GMLAN Serial Data (-)(3) | II | - |
| 6 | 0.5 | VT/L-GN | 439 | Run/Crank Ignition 1 Voltage | II | - |
| 7 | 0.5 | VT/YE | 5985 | Accessory Wakeup Serial Data | II | - |
| 8 | 2.5 | GY | 120 | Fuel Pump Supply Voltage | I | - |
| 9 | 2.5 | BK | 2150 | Ground | I | - |
| 10 | - | - | - | Not Occupied | - | - |
| 11 | 0.5 | D-BU/BK | 7493 | High Speed GMLAN Serial Data (+)(3) | II | - |
| 12 | 0.5 | D-BU/BK | 7493 | High Speed GMLAN Serial Data (+)(3) | II | - |
| 13 | 0.5 | WH | 7494 | High Speed GMLAN Serial Data (-)(3) | II | - |
| 14 | 0.5 | WH | 7494 | High Speed GMLAN Serial Data (-)(3) | II | - |

| | | | | | | |
|---|---|---|---|---|---|---|
| 15 | 0.5 | D-BU | 7444 | Fuel System Control Module Shield | II | - |
| 16 | 2.5 | BK/L-GN | 1580 | Fuel Pump Low Reference | I | - |

## K166L Multifunction LED Control Module - Left Headlamp

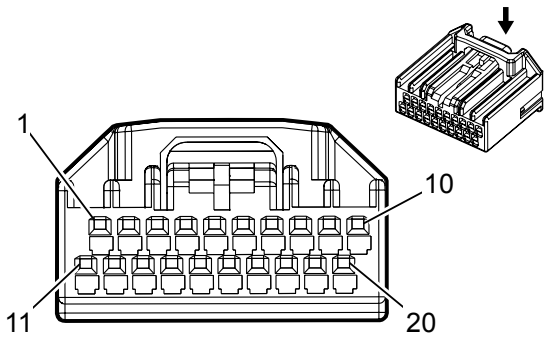


### Connector Part Information

Harness Type:

OEM Connector: MX34020SF1

Service Connector: Service by Harness – See Part Catalog

Description: 20 F 0.64 Series (GY)

### *Terminal Part Information*

| Terminal Type ID | Terminated Lead | Diagnostic Test Probe | Terminal Removal Tool | Service Terminal | Tray | Core Crimp | Insulation Crimp |
|---|---|---|---|---|---|---|---|
| I | Not Available | Not Available | Not Available | Not Available | Not Available | Not Available | Not Available |

### *K166L Multifunction LED Control Module - Left Headlamp*

| Pin | Size | Color | Circuit | Function | Terminal Type ID | Option |
|---|---|---|---|---|---|---|
| 1 | 0.5 | BN | 7538 | Left Front DRL Supply Voltage | I | Z88 |
| 2 | 0.5 | WH | 709 | Left Park Lamp Supply Voltage | I | Z88 |
| 3 | 0.5 | WH | 709 | Left Park Lamp Supply Voltage | I | Z88 |
| 4 | 0.5 | OG | - | Park/DRL LED + | I | Z88 |
| 5 | 0.5 | VT | - | Park/DRL LED - | I | Z88 |
| 6 | 0.5 | WH | - | Ground | I | Z88 |
| 7 | 0.5 | RD | - | Park LED - | I | Z88 |
| 8 | 0.5 | YE | - | Park LED + | I | Z88 |
| 9-10 | - | - | - | Not Occupied | - | - |
| 11 | 0.5 | BK | 150 | Ground | I | Z88 |
| 12 | 0.5 | D-BU | - | Park CTN | I | Z88 |
| 13 | 0.5 | D-GN | - | Park BIN | I | Z88 |
| 14 | 0.5 | PK | - | DRL CTN | I | Z88 |
| 15 | 0.5 | L-GN | - | DRL BIN | I | Z88 |
| 16 | 0.5 | L-BU | - | Ground | I | Z88 |

| | | | | | | |
|---|---|---|---|---|---|---|
| 17 | - | - | - | Not Occupied | - | - |
| 18 | 0.5 | L-BU | - | Ground | I | Z88 |
| 19 | - | - | - | Not Occupied | - | - |
| 20 | 0.5 | BK | 150 | Ground | I | Z88 |

## K166R Multifunction LED Control Module - Right Headlamp

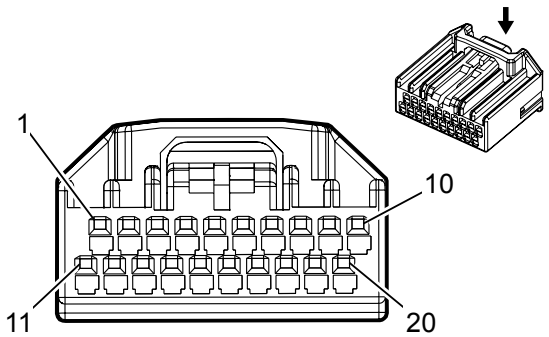


### Connector Part Information

Harness Type:

OEM Connector: MX34020SF1

Service Connector: Service by Harness – See Part Catalog

Description: 20 F 0.64 Series (GY)

### *Terminal Part Information*

| Terminal Type ID | Terminated Lead | Diagnostic Test Probe | Terminal Removal Tool | Service Terminal | Tray | Core Crimp | Insulation Crimp |
|---|---|---|---|---|---|---|---|
| I | Not Available | Not Available | Not Available | Not Available | Not Available | Not Available | Not Available |

### *K166R Multifunction LED Control Module - Right Headlamp*

| Pin | Size | Color | Circuit | Function | Terminal Type ID | Option |
|---|---|---|---|---|---|---|
| 1 | 0.5 | BN | 7539 | Right Front DRL Supply Voltage | I | Z88 |
| 2 | 0.5 | WH | 309 | Right Park Lamp Supply Voltage | I | Z88 |
| 3 | 0.5 | WH | 309 | Right Park Lamp Supply Voltage | I | Z88 |
| 4 | 0.5 | OG | - | Park/DRL LED + | I | Z88 |
| 5 | 0.5 | VT | - | Park/DRL LED - | I | Z88 |
| 6 | 0.5 | WH | - | Ground | I | Z88 |
| 7 | 0.5 | RD | - | Park LED - | I | Z88 |
| 8 | 0.5 | YE | - | Park LED + | I | Z88 |
| 9-10 | - | - | - | Not Occupied | - | - |
| 11 | 0.5 | BK | 250 | Ground | I | Z88 |
| 12 | 0.5 | D-BU | - | Park CTN | I | Z88 |
| 13 | 0.5 | D-GN | - | Park BIN | I | Z88 |
| 14 | 0.5 | PK | - | DRL CTN | I | Z88 |
| 15 | 0.5 | L-GN | - | DRL BIN | I | Z88 |
| 16 | 0.5 | L-BU | - | Ground | I | Z88 |

| | | | | | | |
|---|---|---|---|---|---|---|
| 17 | - | - | - | Not Occupied | - | - |
| 18 | 0.5 | L-BU | - | Ground | I | Z88 |
| 19 | - | - | - | Not Occupied | - | - |
| 20 | 0.5 | BK | 250 | Ground | I | Z88 |

## M4 Air Inlet Actuator

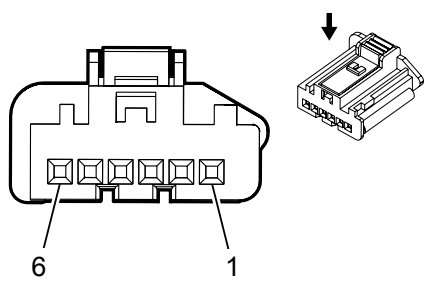


### Connector Part Information

Harness Type: HVAC

OEM Connector: 13576054

Service Connector: Service by Harness - See Part Catalog

Description: 6-Way F 0.64 Micro Quadlock Series (BK)

### *Terminal Part Information*

| Terminal Type ID | Terminated Lead | Diagnostic Test Probe | Terminal Removal Tool | Service Terminal | Tray | Core Crimp | Insulation Crimp |
|---|---|---|---|---|---|---|---|
| I | Not Available | Not Available | Not Available | Not Available | Not Available | Not Available | Not Available |

### *M4 Air Inlet Actuator*

| Pin | Size | Color | Circuit | Function | Terminal Type ID | Option |
|---|---|---|---|---|---|---|
| 1 | 0.35 | BK/YE | 1791 | Air Temperature Door Control Low Reference | I | - |
| 2 | 0.35 | VT/L-GN | 1838 | Recirculation Door Position Signal | I | - |
| 3 | 0.35 | GY/RD | 598 | 5 Volt Reference | I | - |
| 4 | - | - | - | Not Occupied | - | - |
| 5 | 0.35 | D-GN | 1614 | Recirculation Door Control | I | - |
| 6 | 0.35 | YE/BK | 2274 | Recirculation Door Control | I | - |

## M5 Adjustable Pedal Motor

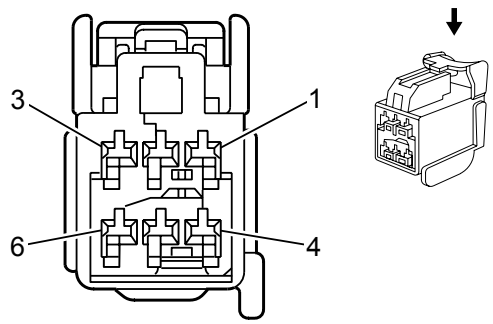


### Connector Part Information

Harness Type: Brake Clutch Jumper

OEM Connector: 10846805

Service Connector: Service by Harness - See Part Catalog

Description: 6-Way F 1.5 Kaizen Series (L-GY)

### *Terminal Part Information*

| Terminal Type ID | Terminated Lead | Diagnostic Test Probe | Terminal Removal Tool | Service Terminal | Tray | Core Crimp | Insulation Crimp |
|---|---|---|---|---|---|---|---|
| I | Pending | J-35616-14 (GN) | J-38125-217 | Not Available | Not Available | 2 | 4 |
| II | Pending | J-35616-14 (GN) | J-38125-217 | Not Available | Not Available | E | 2 |

### *M5 Adjustable Pedal Motor*

| Pin | Size | Color | Circuit | Function | Terminal Type ID | Option |
|---|---|---|---|---|---|---|
| 1 | 1.5 | L-GN/VT | 5130 | Adjustable Pedal Actuator Forward Control | I | - |
| 2 | 0.5 | D-BU | 5952 | Adjustable Pedal Position Sensor Brake Signal | II | - |
| 3 | 0.5 | BK/GY | 6206 | Memory Sensor Low Reference | II | - |
| 4 | 1.5 | YE | 5129 | Adjustable Pedal Actuator Rearward Control | I | - |
| 5 | 0.5 | WH/RD | 6207 | Memory Sensor High Reference | II | - |
| 6 | - | - | - | Not Occupied | - | - |

## M6L Air Temperature Door Actuator - Left

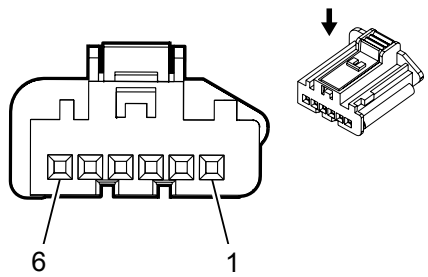


### Connector Part Information

Harness Type: HVAC

OEM Connector: 13576054

Service Connector: Service by Harness - See Part Catalog

Description: 6-Way F 0.64 Micro Quadlock Series (BK)

### *Terminal Part Information*

| Terminal Type ID | Terminated Lead | Diagnostic Test Probe | Terminal Removal Tool | Service Terminal | Tray | Core Crimp | Insulation Crimp |
|---|---|---|---|---|---|---|---|
| I | Not Available | Not Available | Not Available | Not Available | Not Available | Not Available | Not Available |

### *M6L Air Temperature Door Actuator - Left*

| Pin | Size | Color | Circuit | Function | Terminal Type ID | Option |
|---|---|---|---|---|---|---|
| 1 | 0.35 | BK/YE | 1791 | Air Temperature Door Control Low Reference | I | - |
| 2 | 0.35 | D-BU/YE | 733 | Air Temperature Door Position Signal | I | - |
| 3 | 0.35 | GY/RD | 598 | 5 Volt Reference | I | - |
| 4 | - | - | - | Not Occupied | - | - |
| 5 | 0.35 | L-BU/BN | 1199 | Air Temperature Door Control | I | - |
| 6 | 0.35 | GY/D-GN | 2210 | Air Temperature Door Control | I | - |

## M6R Air Temperature Door Actuator - Right

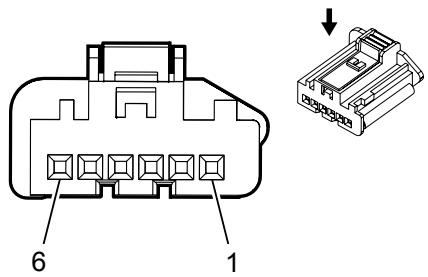


### Connector Part Information

Harness Type: HVAC

OEM Connector: 13576054

Service Connector: Service by Harness - See Part Catalog

Description: 6-Way F 0.64 Micro Quadlock Series (BK)

### *Terminal Part Information*

| Terminal Type ID | Terminated Lead | Diagnostic Test Probe | Terminal Removal Tool | Service Terminal | Tray | Core Crimp | Insulation Crimp |
|---|---|---|---|---|---|---|---|
| I | Not Available | Not Available | Not Available | Not Available | Not Available | Not Available | Not Available |

### *M6R Air Temperature Door Actuator - Right*

| Pin | Size | Color | Circuit | Function | Terminal Type ID | Option |
|---|---|---|---|---|---|---|
| 1 | 0.35 | BK/YE | 1791 | Air Temperature Door Control Low Reference | I | - |
| 2 | 0.35 | BN/L-BU | 1646 | Passenger Air Temperature Door Position Signal | I | - |
| 3 | 0.35 | GY/RD | 598 | 5 Volt Reference | I | - |
| 4 | - | - | - | Not Occupied | - | - |
| 5 | 0.35 | WH/BK | 1236 | Passenger Air Temperature Door Control | I | - |
| 6 | 0.35 | GY/BK | 2778 | Passenger Air Temperature Motor Control | I | - |

## M7 Transmission Shift Lock Control Solenoid Actuator

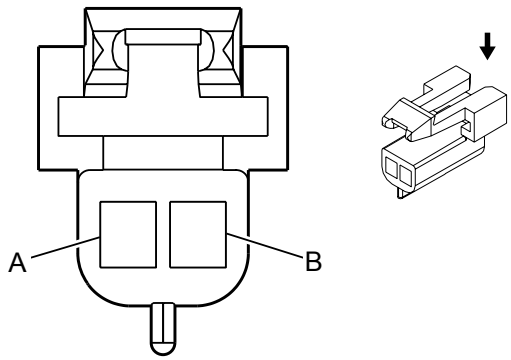


### Connector Part Information

Harness Type:

OEM Connector: 12052832

Service Connector: 13583033

Description: 2 F 150 Metri Pack Series (BK)

### *Terminal Part Information*

| Terminal Type ID | Terminated Lead | Diagnostic Test Probe | Terminal Removal Tool | Service Terminal | Tray | Core Crimp | Insulation Crimp |
|---|---|---|---|---|---|---|---|
| I | Not Available | Not Available | Not Available | Not Available | Not Available | Not Available | Not Available |

### *M7 Transmission Shift Lock Control Solenoid Actuator*

| Pin | Size | Color | Circuit | Function | Terminal Type ID | Option |
|---|---|---|---|---|---|---|
| A | 0.5 | YE/WH | 816 | Brake Transmission Shift Interlock Solenoid Control | I | - |
| B | 0.5 | BK/WH | 1851 | Signal Ground | I | - |

## M8 Blower Motor

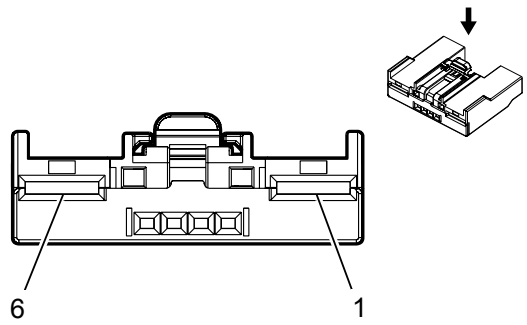


### Connector Part Information

Harness Type: HVAC

OEM Connector: 10864043

Service Connector: 19299711

Description: 6-Way F 0.64 GET, 6.3 Series (BK)

### *Terminal Part Information*

| Terminal Type ID | Terminated Lead | Diagnostic Test Probe | Terminal Removal Tool | Service Terminal | Tray | Core Crimp | Insulation Crimp |
|---|---|---|---|---|---|---|---|
| I | Not Available | Not Available | Not Available | Not Available | Not Available | Not Available | Not Available |

### *M8 Blower Motor*

| Pin | Size | Color | Circuit | Function | Terminal Type ID | Option |
|---|---|---|---|---|---|---|
| 1 | 4 | RD/VT | 542 | Battery Positive Voltage | I | - |
| 2 | 0.35 | D-BU/GY | 754 | Blower Motor Speed Control | I | - |
| 3-5 | - | - | - | Not Occupied | - | - |
| 6 | 5 | BK | 1050 | Ground | I | - |

## M26 Front Axle Engagement Actuator

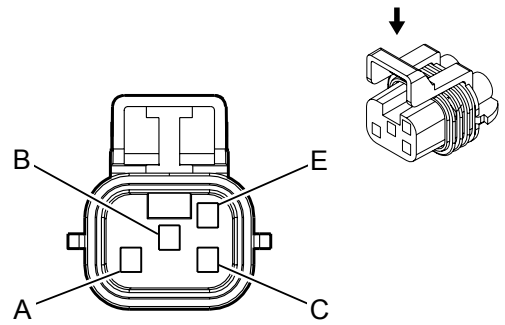


### Connector Part Information

Harness Type: Front Axle

OEM Connector: 15324541

Service Connector: SEE NOTE

Description: 4-Way F 150 Metri Pack Series, Sealed (BU)

### *Terminal Part Information*

| Terminal Type ID | Terminated Lead | Diagnostic Test Probe | Terminal Removal Tool | Service Terminal | Tray | Core Crimp | Insulation Crimp |
|---|---|---|---|---|---|---|---|
| I | 13575427 | J-35616-14 (GN) | J-38125-12A | 12048074 | 2 | E | 1 |

### *M26 Front Axle Engagement Actuator*

| Pin | Size | Color | Circuit | Function | Terminal Type ID | Option |
|---|---|---|---|---|---|---|
| A | 0.5 | YE/WH | 1695 | Four Wheel Drive Wheel Lock Indicator | I | - |
| B | 0.5 | GY/BK | 1570 | Front Axle Actuator Control | I | - |
| C | 0.5 | VT/BK | 2139 | Run/Crank Ignition 1 Voltage | I | - |
| D | - | - | - | Not Occupied | - | - |
| E | 0.5 | BK | 550 | Ground | I | - |

## M26 Front Axle Engagement Actuator

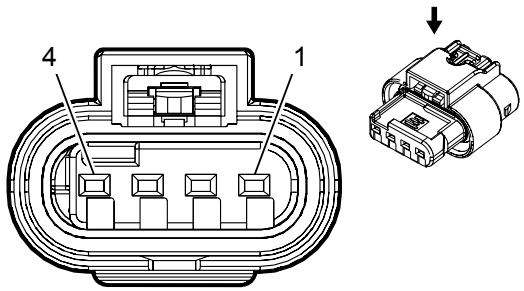


### Connector Part Information

Harness Type: Front Axle

OEM Connector: 13817132

Service Connector: 19300397

Description: 4-Way F 1.2 Multiple Contact Point Series, Sealed (BK)

### *Terminal Part Information*

| Terminal Type ID | Terminated Lead | Diagnostic Test Probe | Terminal Removal Tool | Service Terminal | Tray | Core Crimp | Insulation Crimp |
|---|---|---|---|---|---|---|---|
| I | Not Available | Not Available | Not Available | Not Available | Not Available | Not Available | Not Available |

### *M26 Front Axle Engagement Actuator*

| Pin | Size | Color | Circuit | Function | Terminal Type ID | Option |
|---|---|---|---|---|---|---|
| 1 | 0.5 | VT/BK | 2139 | Run/Crank Ignition 1 Voltage | I | - |
| 2 | 0.5 | GY/BK | 1570 | Front Axle Actuator Control | I | - |
| 3 | 0.5 | YE/WH | 1695 | Four Wheel Drive Wheel Lock Indicator | I | - |
| 4 | 0.5 | BK | 550 | Ground | I | - |

## M28L High Beam Solenoid Actuator - Left

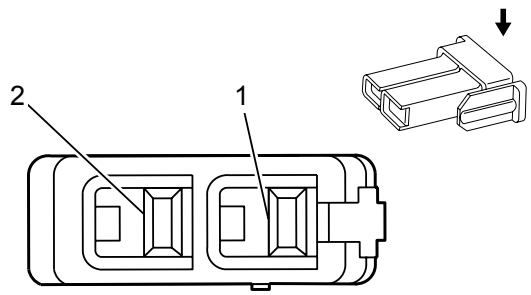


### Connector Part Information

Harness Type:

OEM Connector: XLP-02V

Service Connector: Service by Harness – See Part Catalog

Description: 2 F XL Series (WH)

### *Terminal Part Information*

| Terminal Type ID | Terminated Lead | Diagnostic Test Probe | Terminal Removal Tool | Service Terminal | Tray | Core Crimp | Insulation Crimp |
|---|---|---|---|---|---|---|---|
| I | Not Available | Not Available | Not Available | Not Available | Not Available | Not Available | Not Available |

### *M28L High Beam Solenoid Actuator - Left*

| Pin | Size | Color | Circuit | Function | Terminal Type ID | Option |
|---|---|---|---|---|---|---|
| 1 | 0.5 | TN | - | High Beam Solenoid - | I | Z88 |
| 2 | 0.5 | GY | - | High Beam Solenoid + | I | Z88 |

## M28R High Beam Solenoid Actuator - Right

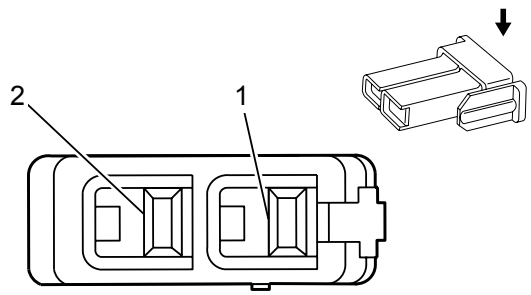


### Connector Part Information

Harness Type:

OEM Connector: XLP-02V

Service Connector: Service by Harness – See Part Catalog

Description: 2 F XL Series (WH)

### *Terminal Part Information*

| Terminal Type ID | Terminated Lead | Diagnostic Test Probe | Terminal Removal Tool | Service Terminal | Tray | Core Crimp | Insulation Crimp |
|---|---|---|---|---|---|---|---|
| I | Not Available | Not Available | Not Available | Not Available | Not Available | Not Available | Not Available |

### *M28R High Beam Solenoid Actuator - Right*

| Pin | Size | Color | Circuit | Function | Terminal Type ID | Option |
|---|---|---|---|---|---|---|
| 1 | 0.5 | TN | - | High Beam Solenoid - | I | Z88 |
| 2 | 0.5 | GY | - | High Beam Solenoid + | I | Z88 |

## M37L Mode Door Actuator - Left

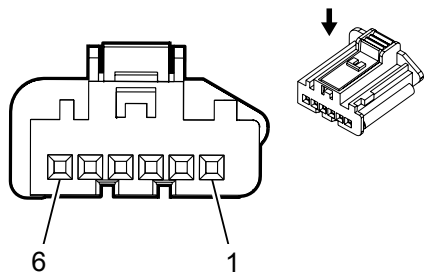


### Connector Part Information

Harness Type: HVAC

OEM Connector: 13576054

Service Connector: Service by Harness - See Part Catalog

Description: 6-Way F 0.64 Micro Quadlock Series (BK)

### *Terminal Part Information*

| Terminal Type ID | Terminated Lead | Diagnostic Test Probe | Terminal Removal Tool | Service Terminal | Tray | Core Crimp | Insulation Crimp |
|---|---|---|---|---|---|---|---|
| I | Not Available | Not Available | Not Available | Not Available | Not Available | Not Available | Not Available |

### *M37L Mode Door Actuator - Left*

| Pin | Size | Color | Circuit | Function | Terminal Type ID | Option |
|---|---|---|---|---|---|---|
| 1 | 0.35 | BK/YE | 1791 | Air Temperature Door Control Low Reference | I | - |
| 2 | 0.35 | WH/D-GN | 2275 | Mode 1 Valve Position Sensor Signal | I | - |
| 3 | 0.35 | GY/RD | 598 | 5 Volt Reference | I | - |
| 4 | - | - | - | Not Occupied | - | - |
| 5 | 0.35 | WH | 119 | Mode Door Control | I | - |
| 6 | 0.35 | YE/BN | 2273 | Mode Door Control | I | - |

## M50D Seat Front Vertical Motor - Driver

### Connector Part Information

Harness Type: Driver Seat Cushion

OEM Connector: 3-023-66-52

Service Connector: Service by Harness - See Part Catalog

Description:

### *Terminal Part Information*

| Terminal Type ID | Terminated Lead | Diagnostic Test Probe | Terminal Removal Tool | Service Terminal | Tray | Core Crimp | Insulation Crimp |
|---|---|---|---|---|---|---|---|
| I | Not Available | Not Available | Not Available | Not Available | Not Available | Not Available | Not Available |

### *M50D Seat Front Vertical Motor - Driver*

| Pin | Size | Color | Circuit | Function | Terminal Type ID | Option |
|---|---|---|---|---|---|---|
| 1 | 1.5 | L-GN/BN | 286 | Driver Power Seat Front Vertical Motor Up Control | I | - |
| 2 | 0.35 | WH/RD | 3298 | Memory Sensor High Reference (2) | I | - |
| 3 | 1.5 | L-BU/VT | 287 | Driver Power Seat Front Vertical Motor Down Control | I | - |
| 4 | 0.5 | BN/WH | 557 | Memory Seat Front Vertical Motor Position Sensor Signal | I | - |

## M50P Seat Front Vertical Motor - Passenger

### Connector Part Information

Harness Type: Passenger Seat Cushion

OEM Connector: 3-023-66-52

Service Connector: Service by Harness - See Part Catalog

Description:

### *Terminal Part Information*

| Terminal Type ID | Terminated Lead | Diagnostic Test Probe | Terminal Removal Tool | Service Terminal | Tray | Core Crimp | Insulation Crimp |
|---|---|---|---|---|---|---|---|
| I | Not Available | Not Available | Not Available | Not Available | Not Available | Not Available | Not Available |

### *M50P Seat Front Vertical Motor - Passenger*

| Pin | Size | Color | Circuit | Function | Terminal Type ID | Option |
|---|---|---|---|---|---|---|
| 1 | 1.5 | L-GN/L-BU | 298 | Passenger Power Seat Front Vertical Motor Down Control | I | - |
| 2 | - | - | - | Not Occupied | - | - |
| 3 | 1.5 | L-GN/VT | 297 | Passenger Power Seat Front Vertical Motor Up Control | I | - |

## M51D Seat Horizontal Motor - Driver

### Connector Part Information

Harness Type: Driver Seat Cushion

OEM Connector: 3-023-66-52

Service Connector: Service by Harness - See Part Catalog

Description:

### *Terminal Part Information*

| Terminal Type ID | Terminated Lead | Diagnostic Test Probe | Terminal Removal Tool | Service Terminal | Tray | Core Crimp | Insulation Crimp |
|---|---|---|---|---|---|---|---|
| I | Not Available | Not Available | Not Available | Not Available | Not Available | Not Available | Not Available |

### *M51D Seat Horizontal Motor - Driver*

| Pin | Size | Color | Circuit | Function | Terminal Type ID | Option |
|---|---|---|---|---|---|---|
| 1 | 1.5 | YE/L-BU | 285 | Driver Power Seat Horizontal Motor Forward Control | I | - |
| 2 | 0.35 | WH/RD | 3298 | Memory Sensor High Reference (2) | I | - |
| 3 | 1.5 | GY/L-GN | 284 | Driver Power Seat Horizontal Motor Rearward Control | I | - |
| 4 | 0.5 | L-GN | 569 | Memory Seat Horizontal Motor Position Sensor Signal | I | - |

## M51P Seat Horizontal Motor - Passenger

### Connector Part Information

Harness Type: Passenger Seat Cushion

OEM Connector: 3-023-66-52

Service Connector: Service by Harness - See Part Catalog

Description:

### *Terminal Part Information*

| Terminal Type ID | Terminated Lead | Diagnostic Test Probe | Terminal Removal Tool | Service Terminal | Tray | Core Crimp | Insulation Crimp |
|---|---|---|---|---|---|---|---|
| I | Not Available | Not Available | Not Available | Not Available | Not Available | Not Available | Not Available |

### *M51P Seat Horizontal Motor - Passenger*

| Pin | Size | Color | Circuit | Function | Terminal Type ID | Option |
|---|---|---|---|---|---|---|
| 1 | 1.5 | YE/L-BU | 290 | Passenger Power Seat Horizontal Motor Rearward Control | I | - |
| 2 | - | - | - | Not Occupied | - | - |
| 3 | 1.5 | YE/WH | 296 | Passenger Power Seat Horizontal Motor Forward Control | I | - |

## M55D Seat Rear Vertical Motor - Driver

### Connector Part Information

Harness Type: Driver Seat Cushion

OEM Connector: 3-023-66-52

Service Connector: Service by Harness - See Part Catalog

Description:

### *Terminal Part Information*

| Terminal Type ID | Terminated Lead | Diagnostic Test Probe | Terminal Removal Tool | Service Terminal | Tray | Core Crimp | Insulation Crimp |
|---|---|---|---|---|---|---|---|
| I | Not Available | Not Available | Not Available | Not Available | Not Available | Not Available | Not Available |

### *M55D Seat Rear Vertical Motor - Driver*

| Pin | Size | Color | Circuit | Function | Terminal Type ID | Option |
|---|---|---|---|---|---|---|
| 1 | 1.5 | GY/L-BU | 283 | Driver Power Seat Rear Vertical Motor Down Control | I | - |
| 2 | 0.35 | WH/RD | 3298 | Memory Sensor High Reference (2) | I | - |
| 3 | 1.5 | YE | 282 | Driver Power Seat Rear Vertical Motor Up Control | I | - |
| 4 | 0.5 | YE/L-BU | 568 | Memory Seat Rear Vertical Motor Position Sensor Signal | I | - |

## M55P Seat Rear Vertical Motor - Passenger

### Connector Part Information

Harness Type: Passenger Seat Cushion

OEM Connector: 3-023-66-52

Service Connector: Service by Harness - See Part Catalog

Description:

### *Terminal Part Information*

| Terminal Type ID | Terminated Lead | Diagnostic Test Probe | Terminal Removal Tool | Service Terminal | Tray | Core Crimp | Insulation Crimp |
|---|---|---|---|---|---|---|---|
| I | Not Available | Not Available | Not Available | Not Available | Not Available | Not Available | Not Available |

### *M55P Seat Rear Vertical Motor - Passenger*

| Pin | Size | Color | Circuit | Function | Terminal Type ID | Option |
|---|---|---|---|---|---|---|
| 1 | 1.5 | L-GN/WH | 288 | Passenger Power Seat Rear Vertical Motor Up Control | I | - |
| 2 | - | - | - | Not Occupied | - | - |
| 3 | 1.5 | L-BU/WH | 289 | Passenger Power Seat Rear Vertical Motor Down Control | I | - |

## M63 Sliding Rear Window Motor

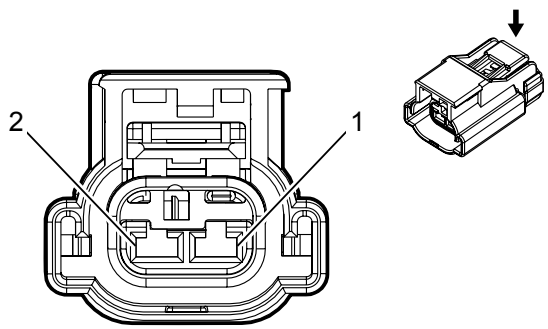


### Connector Part Information

Harness Type: Body

OEM Connector: 13863838

Service Connector: Pending

Description: 2-Way F 2.8 Series, Sealed (BK)

### *Terminal Part Information*

| Terminal Type ID | Terminated Lead | Diagnostic Test Probe | Terminal Removal Tool | Service Terminal | Tray | Core Crimp | Insulation Crimp |
|---|---|---|---|---|---|---|---|
| I | 13582171 | J-35616-35 (VT) | J-38125-12A | Not Available | Not Available | Not Available | Not Available |

### *M63 Sliding Rear Window Motor*

| Pin | Size | Color | Circuit | Function | Terminal Type ID | Option |
|---|---|---|---|---|---|---|
| 1 | 2.5 | GY/L-GN | 5441 | Endgate Window Regulator Down Signal | I | - |
| 2 | 2.5 | YE/D-BU | 5442 | Endgate Window Regulator Up Signal | I | - |

## M64 Starter Motor

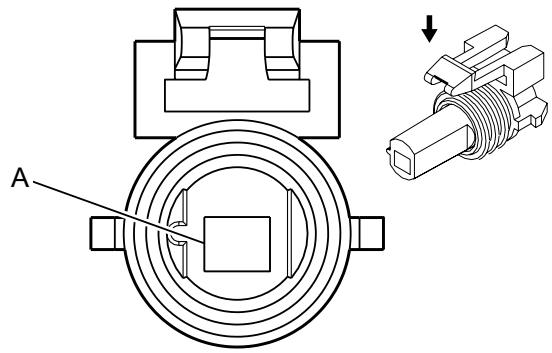


### Connector Part Information

Harness Type: Engine

OEM Connector: 12089916

Service Connector: 13584479

Description: 1-Way F 280 Metri Pack Series, Sealed (GY)

### *Terminal Part Information*

| Terminal Type ID | Terminated Lead | Diagnostic Test Probe | Terminal Removal Tool | Service Terminal | Tray | Core Crimp | Insulation Crimp |
|---|---|---|---|---|---|---|---|
| I | Not Available | J-35616-4A (PU) | J-38125-11A | 12077413 | 4 | F | 5 |

### *M64 Starter Motor*

| Pin | Size | Color | Circuit | Function | Terminal Type ID | Option |
|---|---|---|---|---|---|---|
| A | 4 | YE | 6 | Starter Solenoid Crank Voltage | I | - |

## M64 Starter Motor

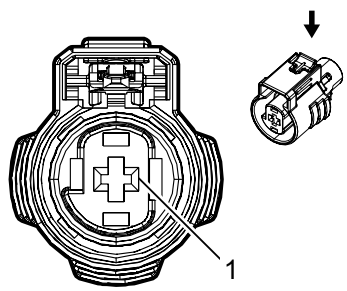


### Connector Part Information

Harness Type: Engine

OEM Connector: 15526411

Service Connector: Not Available

Description: 1-Way F 2.8 MCP Series, Sealed (BK)

### *Terminal Part Information*

| Terminal Type ID | Terminated Lead | Diagnostic Test Probe | Terminal Removal Tool | Service Terminal | Tray | Core Crimp | Insulation Crimp |
|---|---|---|---|---|---|---|---|
| I | Not Available | Not Available | Not Available | Not Available | Not Available | Not Available | Not Available |

### *M64 Starter Motor*

| Pin | Size | Color | Circuit | Function | Terminal Type ID | Option |
|---|---|---|---|---|---|---|
| 1 | 4 | YE | 6 | Starter Solenoid Crank Voltage | I | - |

## M64 Starter Motor X1

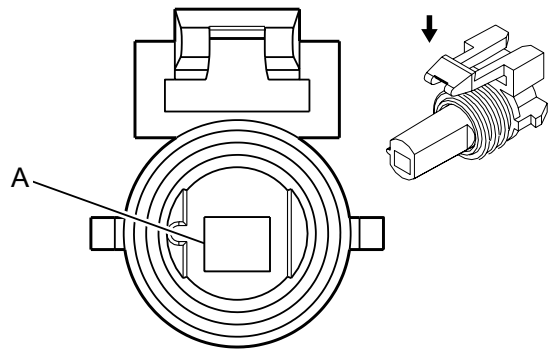


### Connector Part Information

Harness Type: Engine

OEM Connector: 12089916

Service Connector: 13584479

Description: 1-Way F 280 Metri Pack Series, Sealed (GY)

### *Terminal Part Information*

| Terminal Type ID | Terminated Lead | Diagnostic Test Probe | Terminal Removal Tool | Service Terminal | Tray | Core Crimp | Insulation Crimp |
|---|---|---|---|---|---|---|---|
| I | Pending | J-35616-4A (PU) | J-38125-11A | 12077413 | 4 | F | 5 |

### *M64 Starter Motor X1*

| Pin | Size | Color | Circuit | Function | Terminal Type ID | Option |
|---|---|---|---|---|---|---|
| A | 4 | YE | 6 | Starter Solenoid Crank Voltage | I | - |

## M74D Window Motor - Driver

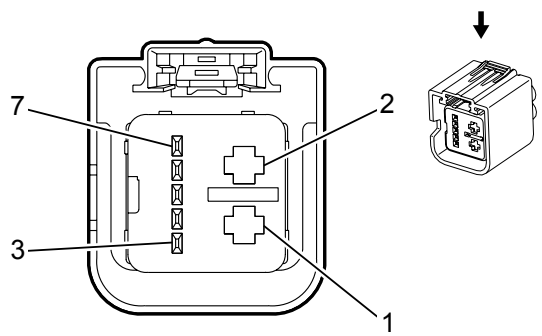


### Connector Part Information

Harness Type: Driver Door

OEM Connector: 13595813

Service Connector: No SDC/FSU

Description: 7-Way F 0.64, 2.8 Kaizen Timer Series, Sealed (BK)

### *Terminal Part Information*

| Terminal Type ID | Terminated Lead | Diagnostic Test Probe | Terminal Removal Tool | Service Terminal | Tray | Core Crimp | Insulation Crimp |
|---|---|---|---|---|---|---|---|
| I | 13327155 | J-35616-35 (VT) | J-38125-36 | 4-964273-1 | 15 | C | 5 |
| II | 13327120 | J-35616-64B (L-BU) | J-38125-215A | SAIT-A03T-M064 | 14 | P | P |

### *M74D Window Motor - Driver*

| Pin | Size | Color | Circuit | Function | Terminal Type ID | Option |
|---|---|---|---|---|---|---|
| 1 | 2.5 | BK | 1150 | Ground | I | - |
| 2 | 2.5 | RD/D-BU | 1842 | Battery Positive Voltage | I | - |
| 3 | 0.35 | L-GN/WH | 1300 | Power Window Master Switch Left Front Up Signal | II | - |
| 4 | 0.5 | L-GN/YE | 6134 | Linear Interconnect Network Bus 3 | II | - |
| 5 | 0.35 | L-GN/VT | 7628 | Power Window Motor Left Front Express Control | II | - |
| 6 | 0.35 | GY | 745 | Left Front Door Ajar Switch Signal | II | - |
| 7 | 0.35 | GY | 1136 | Power Window Master Switch Left Front Down Signal | II | - |

## M74LR Window Motor - Left Rear

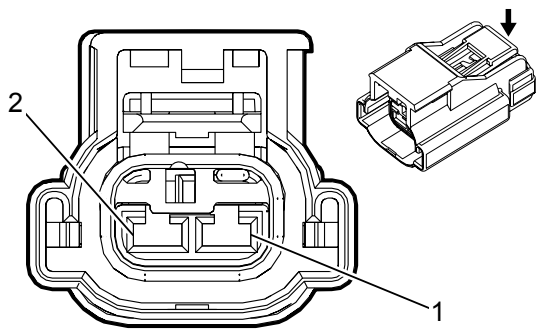


### Connector Part Information

Harness Type: Left Rear Door

OEM Connector: 13896059

Service Connector: Service by Harness - See Part Catalog

Description: 2-Way F 2.8 APEX Series, Sealed (BK)

### *Terminal Part Information*

| Terminal Type ID | Terminated Lead | Diagnostic Test Probe | Terminal Removal Tool | Service Terminal | Tray | Core Crimp | Insulation Crimp |
|---|---|---|---|---|---|---|---|
| I | 13582171 | J-35616-35 (VT) | J-38125-12A | Not Available | Not Available | Not Available | Not Available |

### *M74LR Window Motor - Left Rear*

| Pin | Size | Color | Circuit | Function | Terminal Type ID | Option |
|---|---|---|---|---|---|---|
| 1 | 2.5 | D-BU/VT | 668 | Power Window Motor Left Rear Up Control | I | - |
| 2 | 2.5 | YE/D-BU | 669 | Power Window Motor Left Rear Down Control | I | - |

## M74P Window Motor - Passenger

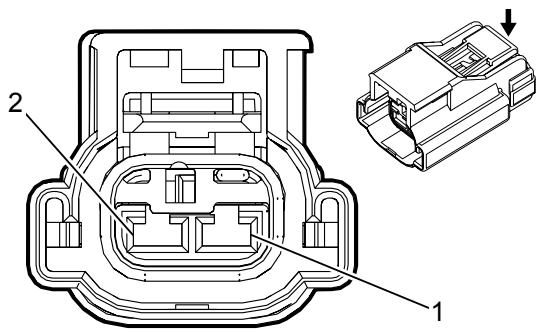


### Connector Part Information

Harness Type: Passenger Door

OEM Connector: 13896059

Service Connector: Service by Harness - See Part Catalog

Description: 2-Way F 2.8 APEX Series, Sealed (BK)

### *Terminal Part Information*

| Terminal Type ID | Terminated Lead | Diagnostic Test Probe | Terminal Removal Tool | Service Terminal | Tray | Core Crimp | Insulation Crimp |
|---|---|---|---|---|---|---|---|
| I | 13582171 | J-35616-35 (VT) | J-38125-12A | Not Available | Not Available | Not Available | Not Available |

### *M74P Window Motor - Passenger*

| Pin | Size | Color | Circuit | Function | Terminal Type ID | Option |
|---|---|---|---|---|---|---|
| 1 | 2.5 | YE/D-BU | 3388 | Power Window Motor Co-Driver Down Control | I | - |
| 2 | 2.5 | L-GN/GY | 3387 | Power Window Motor Co-Driver Up Control | I | - |

## M74RR Window Motor - Right Rear

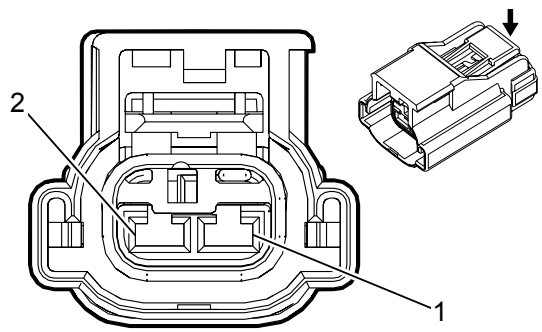


### Connector Part Information

Harness Type: Right Rear Door

OEM Connector: 13896059

Service Connector: Service by Harness - See Part Catalog

Description: 2-Way F 2.8 APEX Series, Sealed (BK)

### *Terminal Part Information*

| Terminal Type ID | Terminated Lead | Diagnostic Test Probe | Terminal Removal Tool | Service Terminal | Tray | Core Crimp | Insulation Crimp |
|---|---|---|---|---|---|---|---|
| I | 13582171 | J-35616-35 (VT) | J-38125-12A | Not Available | Not Available | Not Available | Not Available |

### *M74RR Window Motor - Right Rear*

| Pin | Size | Color | Circuit | Function | Terminal Type ID | Option |
|---|---|---|---|---|---|---|
| 1 | 2.5 | D-BU/GY | 670 | Power Window Motor Right Rear Up Control | I | - |
| 2 | 2.5 | L-GN/BK | 671 | Power Window Motor Right Rear Down Control | I | - |

## M75 Windshield Wiper Motor

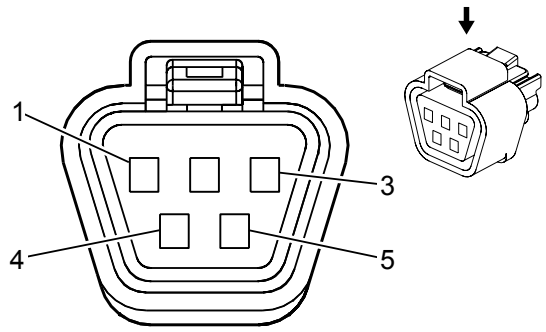


### Connector Part Information

Harness Type: Body

OEM Connector: 15316488

Service Connector: 13587179

Description: 5-Way F 090 Series, Sealed (GY)

### *Terminal Part Information*

| Terminal Type ID | Terminated Lead | Diagnostic Test Probe | Terminal Removal Tool | Service Terminal | Tray | Core Crimp | Insulation Crimp |
|---|---|---|---|---|---|---|---|
| I | 13587473 | J-35616-18 (BK) | J-38125-552 | 7116-4026 | 11 | E | 1 |
| II | Pending | J-35616-18 (BK) | J-38125-552 | 7116-4025 | 11 | E | 1 |

### *M75 Windshield Wiper Motor*

| Pin | Size | Color | Circuit | Function | Terminal Type ID | Option |
|---|---|---|---|---|---|---|
| 1 | 1 | YE/BN | 95 | Windshield Wiper Motor Low Speed Control | I | - |
| 2 | 0.5 | BK | 1850 | Ground | II | - |
| 3 | 0.5 | BN/L-GN | 196 | Windshield Wiper Motor Park Switch Signal | II | - |
| 4 | 1 | WH | 92 | Windshield Wiper Motor High Speed Control | I | - |
| 5 | 1 | BK | 550 | Ground | I | - |

# M77D Outside Rearview Mirror Motor - Driver

## Connector Part Information

Harness Type:

OEM Connector: MHFB5083

Service Connector: Service by Harness – See Part Catalog

Description: 8 F  (BK)

## *Terminal Part Information*

| Terminal Type ID | Terminated Lead | Diagnostic Test Probe | Terminal Removal Tool | Service Terminal | Tray | Core Crimp | Insulation Crimp |
|---|---|---|---|---|---|---|---|
| I | Not Available | Not Available | Not Available | Not Available | Not Available | Not Available | Not Available |

## *M77D Outside Rearview Mirror Motor - Driver*

| Pin | Size | Color | Circuit | Function | Terminal Type ID | Option |
|---|---|---|---|---|---|---|
| 1 | 0.35 | BN | 3392 | Driver Mirror Position Sensor High Reference | I | A45 |
| 2 | 0.35 | GN/WH | 3389 | Driver Mirror Motor Right (+) Left (-) Control | I | A45 |
| 3 | 0.35 | GY | 3395 | Driver Mirror Position Sensor Left (-) Right (+) Signal | I | A45 |
| 4 | 0.35 | WH | 3391 | Driver Mirror Motor Common Control | I | A45 |
| 5 | 0.35 | GN | 3394 | Driver Mirror Position Sensor Up (+) Down (-) Signal | I | A45 |
| 6 | - | - | - | Not Occupied | - | - |
| 7 | 0.35 | BU | 3393 | Driver Mirror Position Sensor Low Reference | I | A45 |
| 8 | 0.35 | BU/WH | 3390 | Driver Mirror Motor Up (+) Down (-) Control | I | A45 |

# M77P Outside Rearview Mirror Motor - Passenger

## Connector Part Information

Harness Type:

OEM Connector: MHFB5083

Service Connector: Service by Harness – See Part Catalog

Description: 8 F  (BK)

## *Terminal Part Information*

| Terminal Type ID | Terminated Lead | Diagnostic Test Probe | Terminal Removal Tool | Service Terminal | Tray | Core Crimp | Insulation Crimp |
|---|---|---|---|---|---|---|---|
| I | Not Available | Not Available | Not Available | Not Available | Not Available | Not Available | Not Available |

## *M77P Outside Rearview Mirror Motor - Passenger*

| Pin | Size | Color | Circuit | Function | Terminal Type ID | Option |
|---|---|---|---|---|---|---|
| 1 | 0.35 | BN | 3399 | Co-Driver Mirror Position Sensor High Reference | I | A45 |
| 2 | 0.35 | GN/WH | 3396 | Co-Driver Mirror Motor Right (+) Left (-) Control | I | A45 |
| 3 | 0.35 | GY | 3403 | Co-Driver Mirror Position Sensor Left (-) Right (+) Signal | I | A45 |
| 4 | 0.35 | WH | 3398 | Co-Driver Mirror Motor Common Control | I | A45 |
| 5 | 0.35 | GN | 3401 | Co-Driver Mirror Position Sensor Up (+) Down (-) Signal | I | A45 |
| 6 | - | - | - | Not Occupied | - | - |
| 7 | 0.35 | BU | 3400 | Co-Driver Mirror Position Sensor Low Reference | I | A45 |
| 8 | 0.35 | BU/WH | 3397 | Co-Driver Mirror Motor Up (+) Down (-) Control | I | A45 |

## M78D Outside Rearview Mirror Folding Motor - Driver

### Connector Part Information

Harness Type:

OEM Connector: MHSSS031

Service Connector: Service by Harness – See Part Catalog

Description: 2 M  (GY)

### *Terminal Part Information*

| Terminal Type ID | Terminated Lead | Diagnostic Test Probe | Terminal Removal Tool | Service Terminal | Tray | Core Crimp | Insulation Crimp |
|---|---|---|---|---|---|---|---|
| I | Not Available | Not Available | Not Available | Not Available | Not Available | Not Available | Not Available |

### *M78D Outside Rearview Mirror Folding Motor - Driver*

| Pin | Size | Color | Circuit | Function | Terminal Type ID | Option |
|---|---|---|---|---|---|---|
| 1 | 0.35 | YE | 3411 | Driver Mirror Motor Fold Out Control | I | - |
| 2 | 0.35 | L-BU | 3412 | Driver Mirror Motor Fold In Control | I | - |

## M78P Outside Rearview Mirror Folding Motor - Passenger

### Connector Part Information

Harness Type:

OEM Connector: MHSSS031

Service Connector: Service by Harness – See Part Catalog

Description: 2 M  (GY)

### *Terminal Part Information*

| Terminal Type ID | Terminated Lead | Diagnostic Test Probe | Terminal Removal Tool | Service Terminal | Tray | Core Crimp | Insulation Crimp |
|---|---|---|---|---|---|---|---|
| I | Not Available | Not Available | Not Available | Not Available | Not Available | Not Available | Not Available |

### *M78P Outside Rearview Mirror Folding Motor - Passenger*

| Pin | Size | Color | Circuit | Function | Terminal Type ID | Option |
|---|---|---|---|---|---|---|
| 1 | 0.35 | YE | 3413 | Co-Driver Mirror Motor Fold Out Control | I | - |
| 2 | 0.35 | L-BU | 3414 | Co-Driver Mirror Motor Fold In Control | I | - |

## P3 Backup Alarm

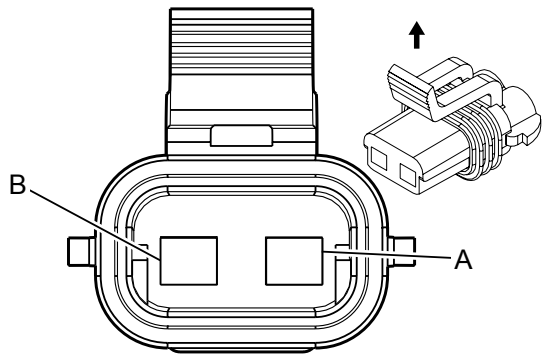


### Connector Part Information

Harness Type: Backup Alarm

OEM Connector: 15300027

Service Connector: 12101855

Description: 2-Way F 280 Metri Pack Series, Sealed (BK)

### *Terminal Part Information*

| Terminal Type ID | Terminated Lead | Diagnostic Test Probe | Terminal Removal Tool | Service Terminal | Tray | Core Crimp | Insulation Crimp |
|---|---|---|---|---|---|---|---|
| I | Pending | J-35616-4A (PU) | J-38125-11A | 12077411 | 2 | 2 | 5 |

### *P3 Backup Alarm*

| Pin | Size | Color | Circuit | Function | Terminal Type ID | Option |
|---|---|---|---|---|---|---|
| A | 1 | L-GN | 1624 | Trailer Backup Lamp Supply Voltage | I | - |
| B | 1 | WH | 22 | Trailer Ground | I | - |

## P12 Horn

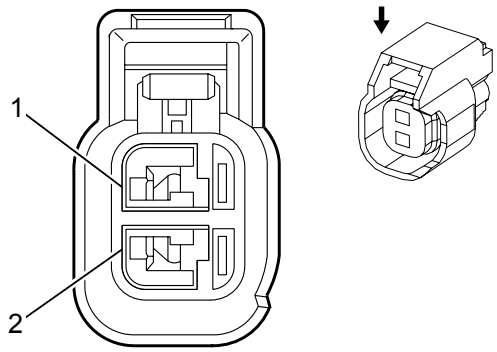


### Connector Part Information

Harness Type: Forward Lamp

OEM Connector: 13594801

Service Connector: 13585854

Description: 2-Way F 150 GT Series, Sealed (BK)

### *Terminal Part Information*

| Terminal Type ID | Terminated Lead | Diagnostic Test Probe | Terminal Removal Tool | Service Terminal | Tray | Core Crimp | Insulation Crimp |
|---|---|---|---|---|---|---|---|
| I | 13575412 | J-35616-2A (GY) | J-38125-553 | 12191819 | 8 | 2 | 1 |

### *P12 Horn*

| Pin | Size | Color | Circuit | Function | Terminal Type ID | Option |
|---|---|---|---|---|---|---|
| 1 | 0.75 | BK | 150 | Ground | I | - |
| 2 | 0.75 | BN/GY | 29 | Horn Control | I | - |

## P14 Passenger Air Bag Disabled Indicator

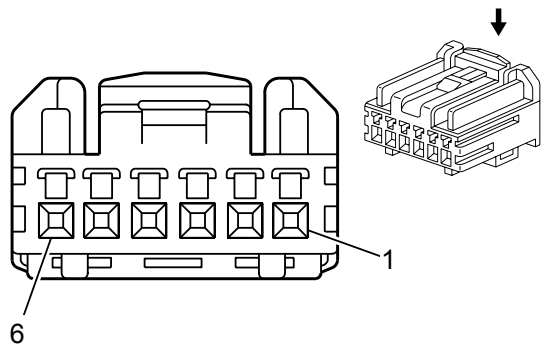


### Connector Part Information

Harness Type: Overhead Console

OEM Connector: 13608102

Service Connector: 19153174

Description: 6-Way F 0.64 HCM Series (NA)

### *Terminal Part Information*

| Terminal Type ID | Terminated Lead | Diagnostic Test Probe | Terminal Removal Tool | Service Terminal | Tray | Core Crimp | Insulation Crimp |
|---|---|---|---|---|---|---|---|
| I | Pending | J-35616-64B (L-BU) | J-38125-12A | SHCM-A03T-P025 | 20 | J | J |

### *P14 Passenger Air Bag Disabled Indicator*

| Pin | Size | Color | Circuit | Function | Terminal Type ID | Option |
|---|---|---|---|---|---|---|
| 1 | 0.35 | D-BU | 2307 | Passenger Air Bag On Indicator Control | I | - |
| 2 | 0.5 | BK | 1050 | Ground | I | - |
| 3 | 0.35 | L-GN | 2308 | Passenger Air Bag Off Indicator Control | I | - |
| 4 | 0.35 | VT/WH | 1139 | Run/Crank Ignition 1 Voltage | I | - |
| 5 | 0.35 | VT/WH | 5234 | Passenger Seat Belt Indicator | I | - |
| 6 | - | - | - | Not Occupied | - | - |

## P16 Instrument Cluster

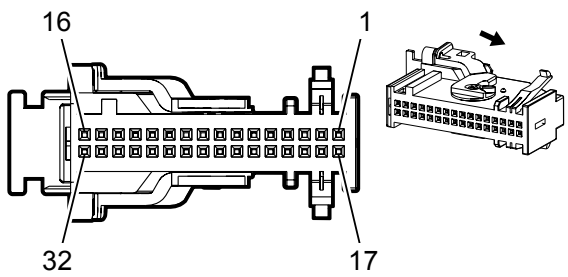


### Connector Part Information

Harness Type: Instrument Panel

OEM Connector: 12198036

Service Connector: 88988405

Description: 32-Way F 0.64 Micro Quadlok Series (BK)

### *Terminal Part Information*

| Terminal Type ID | Terminated Lead | Diagnostic Test Probe | Terminal Removal Tool | Service Terminal | Tray | Core Crimp | Insulation Crimp |
|---|---|---|---|---|---|---|---|
| I | 13575390 | J-35616-64B (L-BU) | J-38125-12A | 928999-5 | 15 | J | J |
| II | 13575390 | J-35616-64B (L-BU) | J-38125-12A | 928999-5 | 15 | H | H |

### *P16 Instrument Cluster*

| Pin | Size | Color | Circuit | Function | Terminal Type ID | Option |
|---|---|---|---|---|---|---|
| 1 | 0.5 | WH/L-GN | 3997 | MOST Serial Data (-) | I | - |
| 2 | 0.5 | GY/VT | 3998 | MOST Serial Data (+) | I | - |
| 3 | 0.5 | L-GN | 5060 | Low Speed GMLAN Serial Data | I | - |
| 4 | - | - | - | Not Occupied | - | - |
| 5 | 0.35 | WH/VT | 3999 | MOST Control | II | - |
| 6 | - | - | - | Not Occupied | - | - |
| 7 | 0.5 | RD/GY | 2840 | Battery Positive Voltage | I | - |
| 8 | 0.5 | VT/BK | 1639 | Run/Crank Ignition 1 Voltage | I | - |
| 9 | - | - | - | Not Occupied | - | - |
| 10 | 0.5 | D-BU/YE | 68 | Low Coolant Level Indicator Control | I | - |
| 11 | - | - | - | Not Occupied | - | - |
| 12 | 0.35 | GY/YE | 3885 | Forward Collision Alert LED Control | II | - |
| 13-15 | - | - | - | Not Occupied | - | - |
| 16 | 0.35 | BN/WH | 419 | Check Engine Lamp Control | II | - |

| | | | | | | |
|---|---|---|---|---|---|---|
| 17 | 0.5 | GY/VT | 3998 | MOST Serial Data (+) | I | - |
| 18 | 0.5 | WH/L-GN | 3997 | MOST Serial Data (-) | I | - |
| 19 | 0.5 | BK/WH | 1851 | Signal Ground | I | - |
| 20 | 0.5 | L-GN/BK | 3894 | Linear Interconnect Network Bus 12 | I | - |
| 21-23 | - | - | - | Not Occupied | - | - |
| 24 | 0.35 | VT | 185 | Low Washer Fluid Indicator Control | II | - |
| 25 | 0.35 | BK/D-BU | 61 | Outside Ambient Temperature Sensor Low Reference | II | - |
| 26 | - | - | - | Not Occupied | - | - |
| 27 | 0.35 | D-BU/GY | 636 | Outside Ambient Air Temperature Sensor Signal | II | - |
| 28-29 | - | - | - | Not Occupied | - | - |
| 30 | 0.35 | WH/L-GN | 3535 | Reflected LED Display Dimming Control | II | - |
| 31 | - | - | - | Not Occupied | - | - |
| 32 | 0.35 | L-GN/BN | 507 | Wait To Start Indicator Control | II | - |

## P17 Info Display Module X1

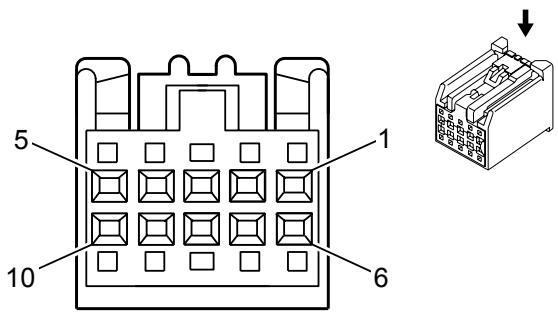


### Connector Part Information

Harness Type: Instrument Panel

OEM Connector: 13815336

Service Connector: 13577390

Description: 10-Way F 0.64 Kaizen Series (BK)

### *Terminal Part Information*

| Terminal Type ID | Terminated Lead | Diagnostic Test Probe | Terminal Removal Tool | Service Terminal | Tray | Core Crimp | Insulation Crimp |
|---|---|---|---|---|---|---|---|
| I | 13327120 | J-35616-64B (L-BU) | J-38125-215A | SAIT-A03T-M064 | 14 | P | P |

### *P17 Info Display Module X1*

| Pin | Size | Color | Circuit | Function | Terminal Type ID | Option |
|---|---|---|---|---|---|---|
| 1 | 0.5 | RD/GY | 2840 | Battery Positive Voltage | I | - |
| 2 | - | - | - | Not Occupied | - | - |
| 3 | 0.5 | L-GN | 5060 | Low Speed GMLAN Serial Data | I | - |
| 4 | - | - | - | Not Occupied | - | - |
| 5 | 0.5 | L-GN/D-BU | 7532 | Linear Interconnect Network Bus 10 | I | - |
| 6-7 | - | - | - | Not Occupied | - | - |
| 8 | 0.5 | L-GN/WH | 7527 | Linear Interconnect Network Bus 5 | I | - |
| 9 | - | - | - | Not Occupied | - | - |
| 10 | 0.35 | BK | 2550 | Ground | I | - |

## P17 Info Display Module X2

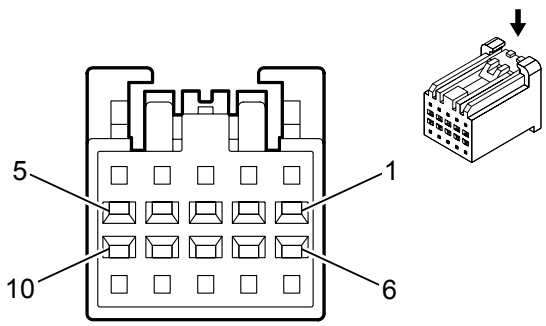


### Connector Part Information

Harness Type: Instrument Panel

OEM Connector: 13876499

Service Connector: 19299775

Description: 10-Way F 0.64 Kaizen Series (GY)

### *Terminal Part Information*

| Terminal Type ID | Terminated Lead | Diagnostic Test Probe | Terminal Removal Tool | Service Terminal | Tray | Core Crimp | Insulation Crimp |
|---|---|---|---|---|---|---|---|
| I | 13327120 | J-35616-64B (L-BU) | J-38125-215A | SAIT-A03T-M064 | 14 | P | P |

### *P17 Info Display Module X2*

| Pin | Size | Color | Circuit | Function | Terminal Type ID | Option |
|---|---|---|---|---|---|---|
| 1 | 0.5 | RD/GY | 2840 | Battery Positive Voltage | I | - |
| 2 | - | - | - | Not Occupied | - | - |
| 3 | 0.35 | L-GN | 5060 | Low Speed GMLAN Serial Data | I | - |
| 4-8 | - | - | - | Not Occupied | - | - |
| 9 | 0.35 | L-GN/YE | 7531 | Linear Interconnect Network Bus 9 | I | - |
| 10 | 0.35 | BK | 2550 | Ground | I | - |

## P19AC Speaker - Subwoofer

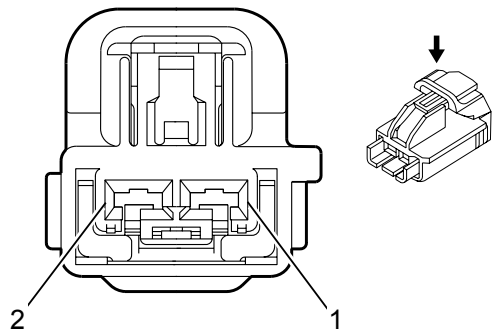


### Connector Part Information

Harness Type: Body

OEM Connector: 10846819

Service Connector: Pending

Description: 2-Way F Kaizen YESC Series (L-GY)

### *Terminal Part Information*

| Terminal Type ID | Terminated Lead | Diagnostic Test Probe | Terminal Removal Tool | Service Terminal | Tray | Core Crimp | Insulation Crimp |
|---|---|---|---|---|---|---|---|
| I | Pending | J-35616-35 (VT) | J-38125-11A | 7116-4112-02 | 9 | C | D |

### *P19AC Speaker - Subwoofer*

| Pin | Size | Color | Circuit | Function | Terminal Type ID | Option |
|---|---|---|---|---|---|---|
| 1 | 2.5 | D-BU/GY | 346 | Left/Rear Subwoofer Speaker (+) | I | - |
| 2 | 2.5 | GY/BK | 315 | Right Subwoofer Speaker (-) | I | - |

## P19AG Speaker - Left Front Door

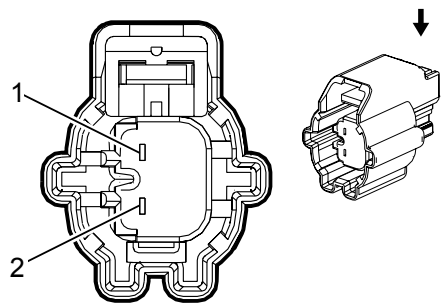


### Connector Part Information

Harness Type: Driver Door

OEM Connector: 13665501

Service Connector: Service by Harness - See Part Catalog

Description: 2-Way F 150 GT Series (BK)

### *Terminal Part Information*

| Terminal Type ID | Terminated Lead | Diagnostic Test Probe | Terminal Removal Tool | Service Terminal | Tray | Core Crimp | Insulation Crimp |
|---|---|---|---|---|---|---|---|
| I | Pending | J-35616-2A (GY) | J-38125-553 | 12191812 | 19 | C | A |

### *P19AG Speaker - Left Front Door*

| Pin | Size | Color | Circuit | Function | Terminal Type ID | Option |
|---|---|---|---|---|---|---|
| 1 | 1 | BN/D-BU | 118 | Left Front Speaker Signal (-) (1) | I | - |
| 2 | 1 | D-BU | 201 | Left Front Speaker (+) (1) | I | - |

## P19AH Speaker - Right Front Door

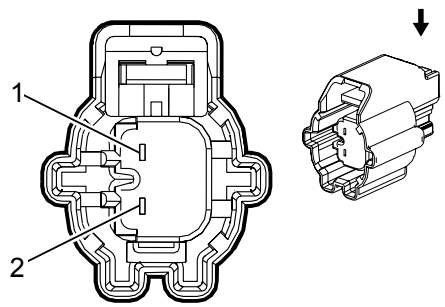


### Connector Part Information

Harness Type: Passenger Door

OEM Connector: 13665501

Service Connector: Service by Harness - See Part Catalog

Description: 2-Way F 150 GT Series (BK)

### *Terminal Part Information*

| Terminal Type ID | Terminated Lead | Diagnostic Test Probe | Terminal Removal Tool | Service Terminal | Tray | Core Crimp | Insulation Crimp |
|---|---|---|---|---|---|---|---|
| I | Not Available | J-35616-2A (GY) | J-38125-553 | 12191812 | 19 | C | A |

### *P19AH Speaker - Right Front Door*

| Pin | Size | Color | Circuit | Function | Terminal Type ID | Option |
|---|---|---|---|---|---|---|
| 1 | 1 | YE/BK | 117 | Right Front Speaker Signal (-) (1) | I | - |
| 2 | 1 | YE | 200 | Right Front Speaker (+) (1) | I | - |

## P19AL Speaker - Left Rear Door

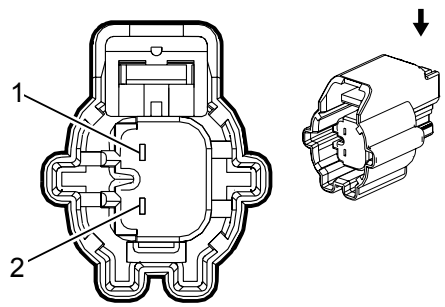


### Connector Part Information

Harness Type: Left Rear Door

OEM Connector: 13665501

Service Connector: Service by Harness - See Part Catalog

Description: 2-Way F 150 GT Series (BK)

### *Terminal Part Information*

| Terminal Type ID | Terminated Lead | Diagnostic Test Probe | Terminal Removal Tool | Service Terminal | Tray | Core Crimp | Insulation Crimp |
|---|---|---|---|---|---|---|---|
| I | Pending | J-35616-2A (GY) | J-38125-553 | 12191812 | 19 | C | A |

### *P19AL Speaker - Left Rear Door*

| Pin | Size | Color | Circuit | Function | Terminal Type ID | Option |
|---|---|---|---|---|---|---|
| 1 | 1 | L-GN/BK | 116 | Left Rear Speaker Signal (-) | I | - |
| 2 | 1 | L-GN | 199 | Left Rear Speaker (+) | I | - |

## P19AM Speaker - Right Rear Door

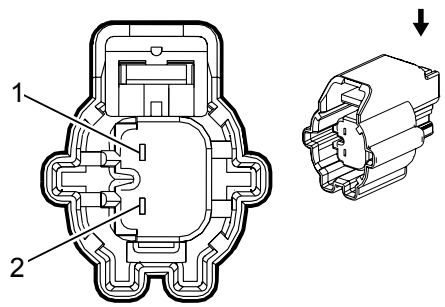


### Connector Part Information

Harness Type: Right Rear Door

OEM Connector: 13665501

Service Connector: Service by Harness - See Part Catalog

Description: 2-Way F 150 GT Series (BK)

### *Terminal Part Information*

| Terminal Type ID | Terminated Lead | Diagnostic Test Probe | Terminal Removal Tool | Service Terminal | Tray | Core Crimp | Insulation Crimp |
|---|---|---|---|---|---|---|---|
| I | Pending | J-35616-2A (GY) | J-38125-553 | 12191812 | 19 | C | A |

### *P19AM Speaker - Right Rear Door*

| Pin | Size | Color | Circuit | Function | Terminal Type ID | Option |
|---|---|---|---|---|---|---|
| 1 | 1 | D-BU/BK | 115 | Right Rear Speaker Signal (-) | I | - |
| 2 | 1 | WH | 46 | Right Rear Speaker (+) | I | - |

## P19AN Speaker - Left Rear Trim Panel

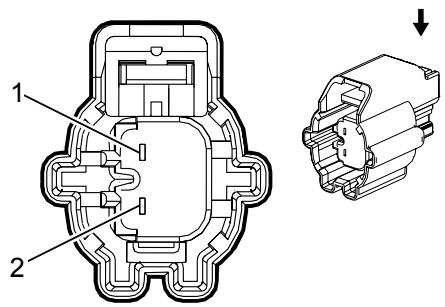


### Connector Part Information

Harness Type: Body

OEM Connector: 13665501

Service Connector: Pending

Description: 2-Way F 150 GT Series (BK)

### *Terminal Part Information*

| Terminal Type ID | Terminated Lead | Diagnostic Test Probe | Terminal Removal Tool | Service Terminal | Tray | Core Crimp | Insulation Crimp |
|---|---|---|---|---|---|---|---|
| I | 13327110 | J-35616-2A (GY) | J-38125-553 | 12191812 | 19 | E | C |

### *P19AN Speaker - Left Rear Trim Panel*

| Pin | Size | Color | Circuit | Function | Terminal Type ID | Option |
|---|---|---|---|---|---|---|
| 1 | 0.5 | L-GN/BK | 116 | Left Rear Speaker Signal (-) | I | - |
| 2 | 0.5 | L-GN | 199 | Left Rear Speaker (+) | I | - |

## P19AP Speaker - Right Rear Trim Panel

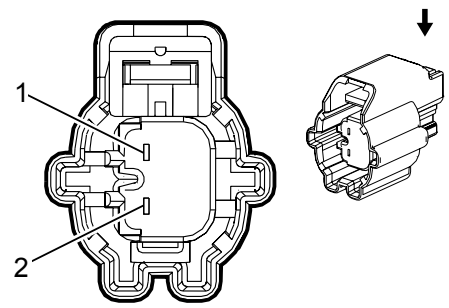


### Connector Part Information

Harness Type: Body

OEM Connector: 13665501

Service Connector: Pending

Description: 2-Way F 150 GT Series (BK)

### *Terminal Part Information*

| Terminal Type ID | Terminated Lead | Diagnostic Test Probe | Terminal Removal Tool | Service Terminal | Tray | Core Crimp | Insulation Crimp |
|---|---|---|---|---|---|---|---|
| I | 13327110 | J-35616-2A (GY) | J-38125-553 | 12191812 | 19 | E | C |

### *P19AP Speaker - Right Rear Trim Panel*

| Pin | Size | Color | Circuit | Function | Terminal Type ID | Option |
|---|---|---|---|---|---|---|
| 1 | 0.5 | D-BU/BK | 115 | Right Rear Speaker Signal (-) | I | - |
| 2 | 0.5 | WH | 46 | Right Rear Speaker (+) | I | - |

## P19J Speaker - Left Instrument Panel

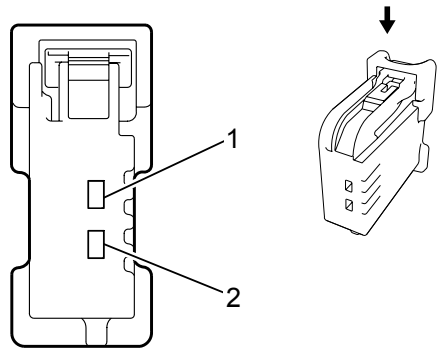


### Connector Part Information

Harness Type: Instrument Panel

OEM Connector: 13595207

Service Connector: 13584097

Description: 2-Way F 0.64, 1.5 Series (BK)

### *Terminal Part Information*

| Terminal Type ID | Terminated Lead | Diagnostic Test Probe | Terminal Removal Tool | Service Terminal | Tray | Core Crimp | Insulation Crimp |
|---|---|---|---|---|---|---|---|
| I | Pending | J-35616-2A (GY) | J-38125-553 | 15496302 | 5 | E | A |

### *P19J Speaker - Left Instrument Panel*

| Pin | Size | Color | Circuit | Function | Terminal Type ID | Option |
|---|---|---|---|---|---|---|
| 1 | 0.5 | BN/D-BU | 118 | Left Front Speaker Signal (-) (1) | I | - |
| 2 | 0.5 | D-BU | 201 | Left Front Speaker (+) (1) | I | - |

## P19J Speaker - Left Instrument Panel (UQA)

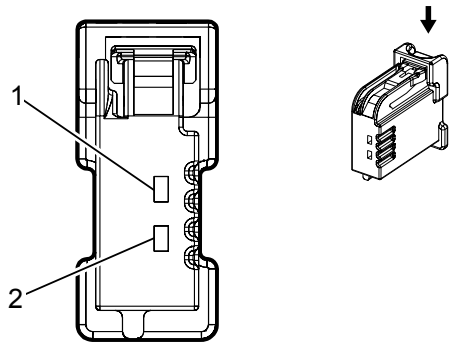


### Connector Part Information

Harness Type: Instrument Panel

OEM Connector: 13608099

Service Connector: 13314097

Description: 2-Way F 1.5 Series (GY)

### *Terminal Part Information*

| Terminal Type ID | Terminated Lead | Diagnostic Test Probe | Terminal Removal Tool | Service Terminal | Tray | Core Crimp | Insulation Crimp |
|---|---|---|---|---|---|---|---|
| I | Not Available | J-35616-2A (GY) | J-38125-553 | 15496302 | 5 | 2 | A |

### *P19J Speaker - Left Instrument Panel (UQA)*

| Pin | Size | Color | Circuit | Function | Terminal Type ID | Option |
|---|---|---|---|---|---|---|
| 1 | 0.75 | YE/GY | 1956 | Left Front Tweeter Speaker (-) | I | - |
| 2 | 0.75 | YE/D-BU | 1856 | Left Front Tweeter Speaker (+) | I | - |

## P19W Speaker - Right Instrument Panel

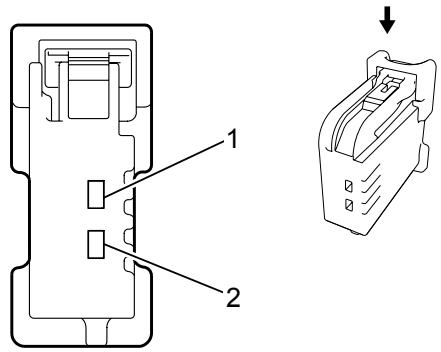


### Connector Part Information

Harness Type: Instrument Panel

OEM Connector: 13595207

Service Connector: 13584097

Description: 2-Way F 0.64, 1.5 Series (BK)

### *Terminal Part Information*

| Terminal Type ID | Terminated Lead | Diagnostic Test Probe | Terminal Removal Tool | Service Terminal | Tray | Core Crimp | Insulation Crimp |
|---|---|---|---|---|---|---|---|
| I | Pending | J-35616-2A (GY) | J-38125-553 | 15496302 | 5 | E | A |

### *P19W Speaker - Right Instrument Panel*

| Pin | Size | Color | Circuit | Function | Terminal Type ID | Option |
|---|---|---|---|---|---|---|
| 1 | 0.5 | YE/BK | 117 | Right Front Speaker Signal (-) (1) | I | - |
| 2 | 0.5 | YE | 200 | Right Front Speaker (+) (1) | I | - |

## P19W Speaker - Right Instrument Panel (UQA)

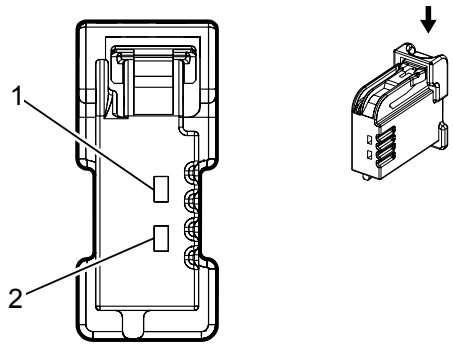


### Connector Part Information

Harness Type: Instrument Panel

OEM Connector: 13608099

Service Connector: 13314097

Description: 2-Way F 1.5 Series (GY)

### *Terminal Part Information*

| Terminal Type ID | Terminated Lead | Diagnostic Test Probe | Terminal Removal Tool | Service Terminal | Tray | Core Crimp | Insulation Crimp |
|---|---|---|---|---|---|---|---|
| I | Not Available | J-35616-2A (GY) | J-38125-553 | 15496302 | 5 | 2 | A |

### *P19W Speaker - Right Instrument Panel (UQA)*

| Pin | Size | Color | Circuit | Function | Terminal Type ID | Option |
|---|---|---|---|---|---|---|
| 1 | 0.75 | VT/BN | 1952 | Right Front Tweeter Speaker (-) | I | - |
| 2 | 0.75 | BN/L-GN | 1852 | Right Front Tweeter Speaker (+) | I | - |

## P22A Video Display - 2nd Row X2 (U42)

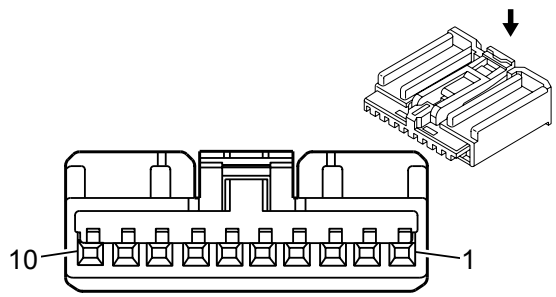


### Connector Part Information

Harness Type: Headliner

OEM Connector: 13574592

Service Connector: 13576634

Description: 10-Way F 0.64 Kaizen Series (BK)

### *Terminal Part Information*

| Terminal Type ID | Terminated Lead | Diagnostic Test Probe | Terminal Removal Tool | Service Terminal | Tray | Core Crimp | Insulation Crimp |
|---|---|---|---|---|---|---|---|
| I | 13327120 | J-35616-64B (L-BU) | J-38125-215A | SAIT-A03T-M064 | 14 | P | P |

### *P22A Video Display - 2nd Row X2 (U42)*

| Pin | Size | Color | Circuit | Function | Terminal Type ID | Option |
|---|---|---|---|---|---|---|
| 1 | 0.35 | VT/L-GN | 7558 | LED Ambient Lighting Control 2 | I | - |
| 2 | 0.5 | BK | 1050 | Ground | I | - |
| 3 | 0.5 | GY | 157 | Interior Lamp Control | I | - |
| 4 | 0.5 | YE | 6817 | LED Backlight Dimming Control | I | - |
| 5 | 0.5 | WH/BN | 6815 | Inadvertent Power Control | I | - |
| 6-7 | - | - | - | Not Occupied | - | - |
| 8 | 0.5<br>0.5 | BK<br>BK/WH | 2550<br>2550 | Ground<br>Ground | I | - |
| 9 | 0.35 | L-GN/YE | 7066 | Entertainment Remote Enable Signal | I | - |
| 10 | 0.5 | RD/L-GN | 1540 | Battery Positive Voltage | I | - |

## P43 Collision Alert Indicators

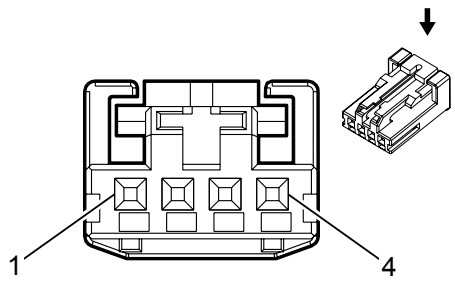


### Connector Part Information

Harness Type: Instrument Panel

OEM Connector: 13853727

Service Connector: 19300597

Description: 4-Way F 0.64 Micro Quadlock Series (BK)

### *Terminal Part Information*

| Terminal Type ID | Terminated Lead | Diagnostic Test Probe | Terminal Removal Tool | Service Terminal | Tray | Core Crimp | Insulation Crimp |
|---|---|---|---|---|---|---|---|
| I | 13575390 | J-35616-64B (L-BU) | J-38125-12A | 928999-5 | 15 | J | J |
| II | 13575390 | J-35616-64B (L-BU) | J-38125-12A | 928999-5 | 15 | H | H |

### *P43 Collision Alert Indicators*

| Pin | Size | Color | Circuit | Function | Terminal Type ID | Option |
|---|---|---|---|---|---|---|
| 1 | 0.5 | VT/BK | 1639 | Run/Crank Ignition 1 Voltage | I | - |
| 2 | 0.35 | GY/YE | 3885 | Forward Collision Alert LED Control | II | - |
| 3 | 0.35 | WH/L-GN | 3535 | Reflected LED Display Dimming Control | II | - |
| 4 | 0.35 | BK/WH | 1851 | Signal Ground | II | - |

## P45LR Seat Haptic Movement Motor - Driver Left Rear

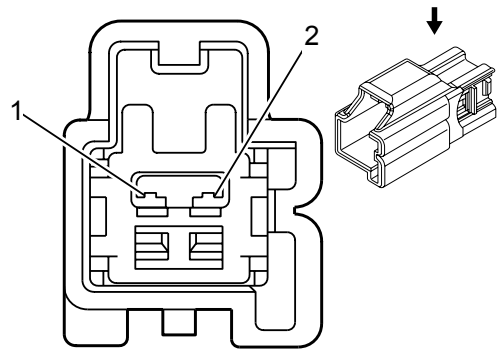


### Connector Part Information

Harness Type: Driver Seat Cushion

OEM Connector: 7282-6443-40

Service Connector: 88988503

Description: 2-Way M 1.5 Series (L-GY)

### *Terminal Part Information*

| Terminal Type ID | Terminated Lead | Diagnostic Test Probe | Terminal Removal Tool | Service Terminal | Tray | Core Crimp | Insulation Crimp |
|---|---|---|---|---|---|---|---|
| I | Not Available | Not Available | Not Available | Not Available | Not Available | Not Available | Not Available |

### *P45LR Seat Haptic Movement Motor - Driver Left Rear*

| Pin | Size | Color | Circuit | Function | Terminal Type ID | Option |
|---|---|---|---|---|---|---|
| 1 | 0.5 | YE/BN | 3037 | Left Rear Haptic Seat Motor Control | I | - |
| 2 | 0.5 | BK | 1150 | Ground | I | - |

## P45RR Seat Haptic Movement Motor - Driver Right Rear

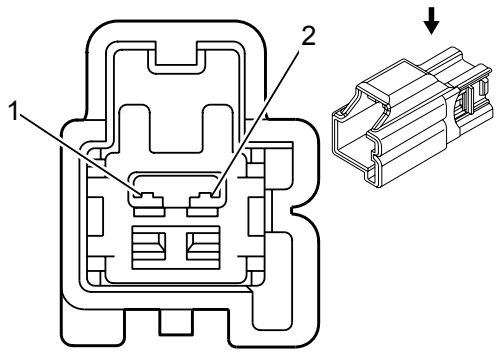


### Connector Part Information

Harness Type: Driver Seat Cushion

OEM Connector: 7282-6443-40

Service Connector: 88988503

Description: 2-Way M 1.5 Series (L-GY)

### *Terminal Part Information*

| Terminal Type ID | Terminated Lead | Diagnostic Test Probe | Terminal Removal Tool | Service Terminal | Tray | Core Crimp | Insulation Crimp |
|---|---|---|---|---|---|---|---|
| I | Not Available | Not Available | Not Available | Not Available | Not Available | Not Available | Not Available |

### *P45RR Seat Haptic Movement Motor - Driver Right Rear*

| Pin | Size | Color | Circuit | Function | Terminal Type ID | Option |
|---|---|---|---|---|---|---|
| 1 | 0.5 | BN | 3038 | Right Rear Haptic Seat Motor Control | I | - |
| 2 | 0.5 | BK | 1150 | Ground | I | - |

## Q2 A/C Compressor Clutch

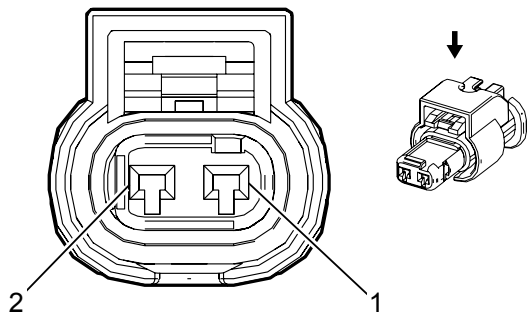


### Connector Part Information

Harness Type: Engine

OEM Connector: 13927761

Service Connector: 19300402

Description: 2-Way F 1.2 MCP Series, Sealed (BK with BK Inner Connector)

### *Terminal Part Information*

| Terminal Type ID | Terminated Lead | Diagnostic Test Probe | Terminal Removal Tool | Service Terminal | Tray | Core Crimp | Insulation Crimp |
|---|---|---|---|---|---|---|---|
| I | Pending | J-35616-16 (L-GN) | J-38125-12A | Not Available | Not Available | Not Available | Not Available |
| II | Pending | Pending | Pending | Not Available | Not Available | Not Available | Not Available |

### *Q2 A/C Compressor Clutch*

| Pin | Size | Color | Circuit | Function | Terminal Type ID | Option |
|---|---|---|---|---|---|---|
| 1 | 0.75<br>1 | BK<br>BK | 550<br>550 | Ground<br>Ground | I | - |
| 2 | 0.75 | BN/L-GN | 59 | A/C Compressor Clutch Supply Voltage | I | - |

## Q6 Camshaft Position Actuator Solenoid Valve

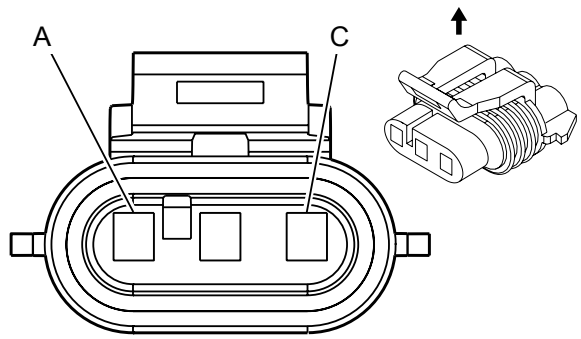


### Connector Part Information

Harness Type: Camshaft Position Sensor Jumper

OEM Connector: 12059595

Service Connector: 13585316

Description: 3-Way F 150 Metri Pack Series, Sealed (BK)

### *Terminal Part Information*

| Terminal Type ID | Terminated Lead | Diagnostic Test Probe | Terminal Removal Tool | Service Terminal | Tray | Core Crimp | Insulation Crimp |
|---|---|---|---|---|---|---|---|
| I | 13575427 | J-35616-14 (GN) | J-38125-12A | 12048074 | 2 | E | 1 |

### *Q6 Camshaft Position Actuator Solenoid Valve*

| Pin | Size | Color | Circuit | Function | Terminal Type ID | Option |
|---|---|---|---|---|---|---|
| A | 0.35 | D-BU | 6259 | Camshaft CAM W Supply Voltage | I | - |
| B | 0.35 | BN | 6266 | Camshaft CAM W Ground | I | - |
| C | 0.35 | D-BU/WH | 6265 | Camshaft CAM W Signal | I | - |

## Q8 Control Solenoid Valve Assembly X1

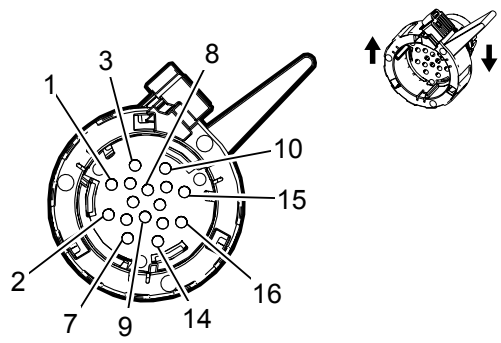


### Connector Part Information

Harness Type: Engine

OEM Connector: 13878751

Service Connector: Pending

Description: 16-Way F 1.5 Series, Sealed (BK)

### *Terminal Part Information*

| Terminal Type ID | Terminated Lead | Diagnostic Test Probe | Terminal Removal Tool | Service Terminal | Tray | Core Crimp | Insulation Crimp |
|---|---|---|---|---|---|---|---|
| I | 13578934 | J-35616-66 (YE) | J-38125-28 | 2 21 24 47220 0 | 12 | E | 1 |
| II | Pending | Pending | Pending | Not Available | Not Available | Not Available | Not Available |

### *Q8 Control Solenoid Valve Assembly X1*

| Pin | Size | Color | Circuit | Function | Terminal Type ID | Option |
|---|---|---|---|---|---|---|
| 1-2 | - | - | - | Not Occupied | - | - |
| 3 | 0.5 | WH/GY | 1786 | Transmission Park/Neutral Signal (1) | I | - |
| 4 | 0.75 | RD/L-GN | 1840 | Battery Positive Voltage | II | - |
| 5 | 0.75 | BK/WH | 451 | Signal Ground | II | - |
| 6-8 | - | - | - | Not Occupied | - | - |
| 9 | 0.5 | VT/YE | 5985 | Accessory Wakeup Serial Data | I | - |
| 10 | 0.5 | D-BU | 2500 | High Speed GMLAN Serial Data (+) (1) | I | - |
| 11 | 0.5 | WH | 2501 | High Speed GMLAN Serial Data (-) (1) | I | - |
| 12 | 0.5 | VT/BK | 2139 | Run/Crank Ignition 1 Voltage | I | - |
| 13 | 0.5 | WH | 2501 | High Speed GMLAN Serial Data (-) (1) | I | - |
| 14 | 0.5 | D-BU | 2500 | High Speed GMLAN Serial Data (+) (1) | I | - |
| 15 | - | - | - | Not Occupied | - | - |
| 16 | 0.5 | BN/WH | 6354 | Output Speed High (Replicated TOS) Input Signal | I | - |

## Q12 Evaporative Emission Purge Solenoid Valve

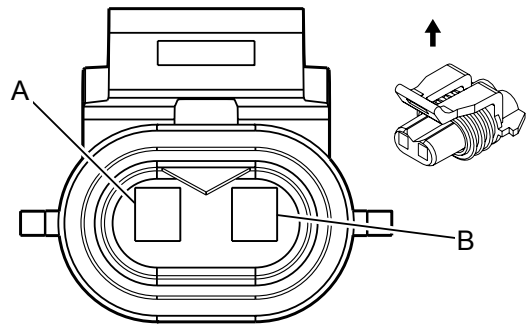


### Connector Part Information

Harness Type: Engine

OEM Connector: 12124037

Service Connector: 13585860

Description: 2-Way F 150 Metri Pack Series, Sealed (BK)

### *Terminal Part Information*

| Terminal Type ID | Terminated Lead | Diagnostic Test Probe | Terminal Removal Tool | Service Terminal | Tray | Core Crimp | Insulation Crimp |
|---|---|---|---|---|---|---|---|
| I | 13575427 | J-35616-14 (GN) | J-38125-12A | 12048074 | 2 | E | 1 |

### *Q12 Evaporative Emission Purge Solenoid Valve*

| Pin | Size | Color | Circuit | Function | Terminal Type ID | Option |
|---|---|---|---|---|---|---|
| A | 0.75 | VT/D-BU | 5293 | Powertrain Main Relay Fused Supply (4) | I | - |
| B | 0.5 | L-GN/D-BU | 428 | EVAP Canister Purge Solenoid Control | I | - |

## Q12 Evaporative Emission Purge Solenoid Valve

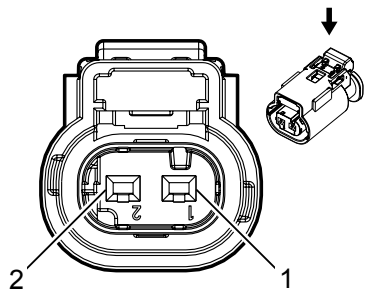


### Connector Part Information

Harness Type: Engine

OEM Connector: 13735326

Service Connector: 13587326

Description: 2-Way F 1.2 MLK Series, Sealed (BK)

### *Terminal Part Information*

| Terminal Type ID | Terminated Lead | Diagnostic Test Probe | Terminal Removal Tool | Service Terminal | Tray | Core Crimp | Insulation Crimp |
|---|---|---|---|---|---|---|---|
| I | Not Available | Not Available | Not Available | Not Available | Not Available | Not Available | Not Available |

### *Q12 Evaporative Emission Purge Solenoid Valve*

| Pin | Size | Color | Circuit | Function | Terminal Type ID | Option |
|---|---|---|---|---|---|---|
| 1 | 0.5 | VT/D-BU | 5293 | Powertrain Main Relay Fused Supply (4) | I | - |
| 2 | 0.5 | L-GN/D-BU | 428 | EVAP Canister Purge Solenoid Control | I | - |

## Q13 Evaporative Emission Vent Solenoid Valve

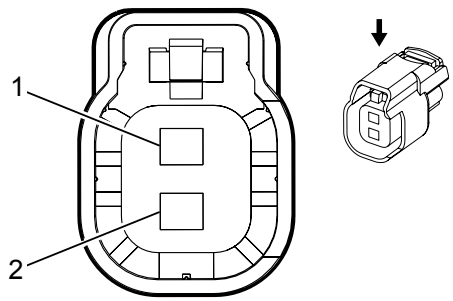


### Connector Part Information

Harness Type: Chassis

OEM Connector: 13771883

Service Connector: 13579002

Description: 2-Way F 1.5 Series, Sealed (BK)

### *Terminal Part Information*

| Terminal Type ID | Terminated Lead | Diagnostic Test Probe | Terminal Removal Tool | Service Terminal | Tray | Core Crimp | Insulation Crimp |
|---|---|---|---|---|---|---|---|
| I | 13576370 | J-35616-2A (GY) | J-38125-11A | 7116-4102-08 | 9 | E | 1 |

### *Q13 Evaporative Emission Vent Solenoid Valve*

| Pin | Size | Color | Circuit | Function | Terminal Type ID | Option |
|---|---|---|---|---|---|---|
| 1 | 0.5 | WH | 1310 | EVAP Canister Vent Solenoid Control | I | - |
| 2 | 0.5 | RD/L-GN | 1840 | Battery Positive Voltage | I | - |

## Q14 Exhaust Gas Recirculation Valve (LML)

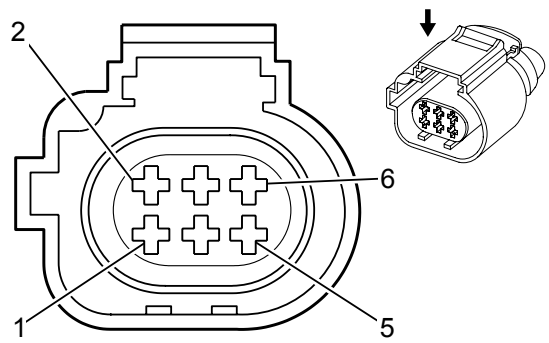


### Connector Part Information

Harness Type: Engine

OEM Connector: 284716-3

Service Connector: 13586128

Description: 6-Way F 1.6 Micro Timer Series, Sealed (BN)

### *Terminal Part Information*

| Terminal Type ID | Terminated Lead | Diagnostic Test Probe | Terminal Removal Tool | Service Terminal | Tray | Core Crimp | Insulation Crimp |
|---|---|---|---|---|---|---|---|
| I | Pending | Pending | Pending | Not Available | Not Available | Not Available | Not Available |

### *Q14 Exhaust Gas Recirculation Valve (LML)*

| Pin | Size | Color | Circuit | Function | Terminal Type ID | Option |
|---|---|---|---|---|---|---|
| 1 | 0 | GY | 2702 | Exhaust Gas Recirculation 5 Volt Reference (2) | I | LML |
| 2 | 0 | L-GN/BK | 5746 | Exhaust Gas Recirculation Valve Motor Low Signal | I | LML |
| 3 | 0 | | 2753 | Exhaust Gas Recirculation Sensor Low Reference | I | LML |
| 4 | - | - | - | Not Occupied | - | - |
| 5 | 0 | BR/WH | 5763 | Exhaust Gas Recirculation Valve Sensor Signal | I | LML |
| 6 | 0 | OG/BK | 5764 | Exhaust Gas Recirculation Valve Motor High Signal | I | LML |

## Q17A Fuel Injector 1 (L96)

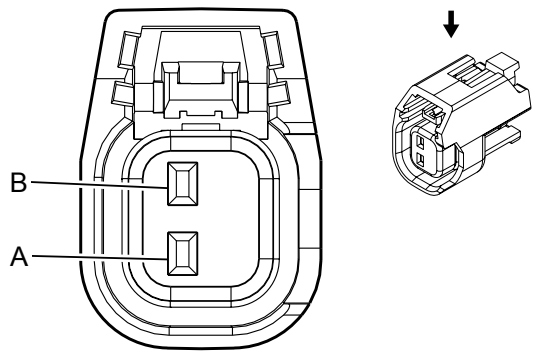


### Connector Part Information

Harness Type: Engine

OEM Connector: 15419715

Service Connector: 13580876

Description: 2-Way F 150 GT Series, Sealed (GY)

### *Terminal Part Information*

| Terminal Type ID | Terminated Lead | Diagnostic Test Probe | Terminal Removal Tool | Service Terminal | Tray | Core Crimp | Insulation Crimp |
|---|---|---|---|---|---|---|---|
| I | 13578879 | J-35616-2A (GY) | J-38125-553 | 12191819 | 8 | C | 1 |
| II | 13575298 | J-35616-2A (GY) | J-38125-553 | 12191819 | 8 | E | 1 |

### *Q17A Fuel Injector 1 (L96)*

| Pin | Size | Color | Circuit | Function | Terminal Type ID | Option |
|---|---|---|---|---|---|---|
| A | 1.5 | VT/D-BU | 5291 | Powertrain Main Relay Fused Supply (2) | I | - |
| B | 0.5 | L-GN/YE | 1744 | Fuel Injector Control (1) | II | - |

## Q17A Fuel Injector 1 (LML)

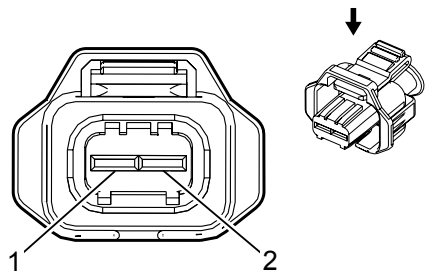


### Connector Part Information

Harness Type: Engine

OEM Connector: 1928404114

Service Connector: SEE NOTE

Description: 2-Way F 2.8 Series, Sealed (BK)

### *Terminal Part Information*

| Terminal Type ID | Terminated Lead | Diagnostic Test Probe | Terminal Removal Tool | Service Terminal | Tray | Core Crimp | Insulation Crimp |
|---|---|---|---|---|---|---|---|
| I | Pending | Pending | Pending | Not Available | Not Available | Not Available | Not Available |

### *Q17A Fuel Injector 1 (LML)*

| Pin | Size | Color | Circuit | Function | Terminal Type ID | Option |
|---|---|---|---|---|---|---|
| 1 | 0.8 | BR/WH | 4901 | Direct Fuel Injector (DFI) High Voltage Supply Cylinder 1 | I | LML |
| 2 | 0.8 | BR | 4801 | Direct Fuel Injector (DFI) High Voltage Control Cylinder 1 | I | LML |

## Q17B Fuel Injector 2 (L96)

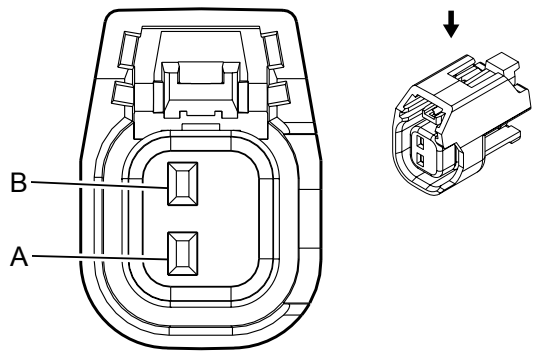


### Connector Part Information

Harness Type: Engine

OEM Connector: 15419715

Service Connector: 13580876

Description: 2-Way F 150 GT Series, Sealed (GY)

### *Terminal Part Information*

| Terminal Type ID | Terminated Lead | Diagnostic Test Probe | Terminal Removal Tool | Service Terminal | Tray | Core Crimp | Insulation Crimp |
|---|---|---|---|---|---|---|---|
| I | 13578879 | J-35616-2A (GY) | J-38125-553 | 12191819 | 8 | C | 1 |
| II | 13575298 | J-35616-2A (GY) | J-38125-553 | 12191819 | 8 | E | 1 |

### *Q17B Fuel Injector 2 (L96)*

| Pin | Size | Color | Circuit | Function | Terminal Type ID | Option |
|---|---|---|---|---|---|---|
| A | 1.5 | VT/D-BU | 5292 | Powertrain Main Relay Fused Supply (3) | I | - |
| B | 0.5 | YE/WH | 1745 | Fuel Injector Control (2) | II | - |

## Q17B Fuel Injector 2 (LML)

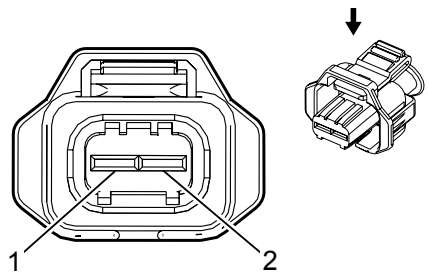


### Connector Part Information

Harness Type: Engine

OEM Connector: 1928404114

Service Connector: SEE NOTE

Description: 2-Way F 2.8 Series, Sealed (BK)

### *Terminal Part Information*

| Terminal Type ID | Terminated Lead | Diagnostic Test Probe | Terminal Removal Tool | Service Terminal | Tray | Core Crimp | Insulation Crimp |
|---|---|---|---|---|---|---|---|
| I | Pending | Pending | Pending | Not Available | Not Available | Not Available | Not Available |

### *Q17B Fuel Injector 2 (LML)*

| Pin | Size | Color | Circuit | Function | Terminal Type ID | Option |
|---|---|---|---|---|---|---|
| 1 | 0.8 | WH | 4902 | Direct Fuel Injector (DFI) High Voltage Supply Cylinder 2 | I | LML |
| 2 | 0.8 | | 4802 | Direct Fuel Injector (DFI) High Voltage Control Cylinder 2 | I | LML |

## Q17C Fuel Injector 3 (L96)

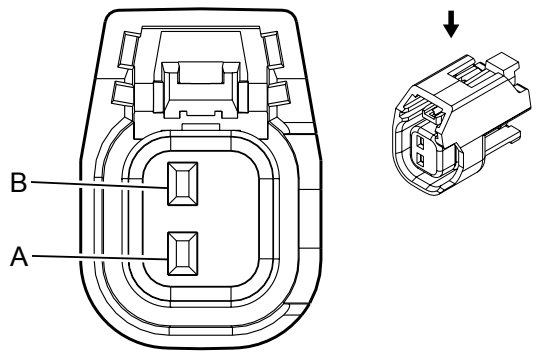


### Connector Part Information

Harness Type: Engine

OEM Connector: 15419715

Service Connector: 13580876

Description: 2-Way F 150 GT Series, Sealed (GY)

### *Terminal Part Information*

| Terminal Type ID | Terminated Lead | Diagnostic Test Probe | Terminal Removal Tool | Service Terminal | Tray | Core Crimp | Insulation Crimp |
|---|---|---|---|---|---|---|---|
| I | 13578879 | J-35616-2A (GY) | J-38125-553 | 12191819 | 8 | C | 1 |
| II | 13575298 | J-35616-2A (GY) | J-38125-553 | 12191819 | 8 | E | 1 |

### *Q17C Fuel Injector 3 (L96)*

| Pin | Size | Color | Circuit | Function | Terminal Type ID | Option |
|---|---|---|---|---|---|---|
| A | 1.5 | VT/D-BU | 5291 | Powertrain Main Relay Fused Supply (2) | I | - |
| B | 0.5 | BN/VT | 1746 | Fuel Injector Control (3) | II | - |

## Q17C Fuel Injector 3 (LML)

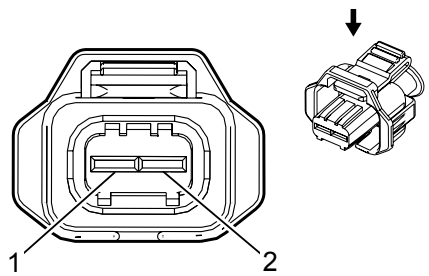


### Connector Part Information

Harness Type: Engine

OEM Connector: 1928404114

Service Connector: SEE NOTE

Description: 2-Way F 2.8 Series, Sealed (BK)

### *Terminal Part Information*

| Terminal Type ID | Terminated Lead | Diagnostic Test Probe | Terminal Removal Tool | Service Terminal | Tray | Core Crimp | Insulation Crimp |
|---|---|---|---|---|---|---|---|
| I | Pending | Pending | Pending | Not Available | Not Available | Not Available | Not Available |

### *Q17C Fuel Injector 3 (LML)*

| Pin | Size | Color | Circuit | Function | Terminal Type ID | Option |
|---|---|---|---|---|---|---|
| 1 | 0.8 | D-GN/WH | 4903 | Direct Fuel Injector (DFI) High Voltage Supply Cylinder 3 | I | LML |
| 2 | 0.8 | D-GN | 4803 | Direct Fuel Injector (DFI) High Voltage Control Cylinder 3 | I | LML |

## Q17D Fuel Injector 4 (L96)

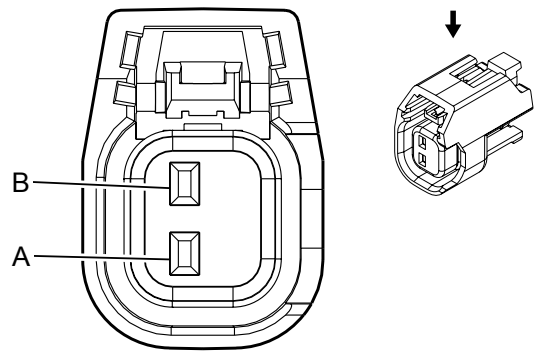


### Connector Part Information

Harness Type: Engine

OEM Connector: 15419715

Service Connector: 13580876

Description: 2-Way F 150 GT Series, Sealed (GY)

### *Terminal Part Information*

| Terminal Type ID | Terminated Lead | Diagnostic Test Probe | Terminal Removal Tool | Service Terminal | Tray | Core Crimp | Insulation Crimp |
|---|---|---|---|---|---|---|---|
| I | 13578879 | J-35616-2A (GY) | J-38125-553 | 12191819 | 8 | C | 1 |
| II | 13575298 | J-35616-2A (GY) | J-38125-553 | 12191819 | 8 | E | 1 |

### *Q17D Fuel Injector 4 (L96)*

| Pin | Size | Color | Circuit | Function | Terminal Type ID | Option |
|---|---|---|---|---|---|---|
| A | 1.5 | VT/D-BU | 5292 | Powertrain Main Relay Fused Supply (3) | I | - |
| B | 0.5 | BN/YE | 844 | Fuel Injector Control (4) | II | - |

## Q17D Fuel Injector 4 (LML)

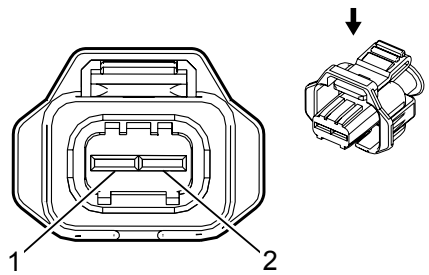


### Connector Part Information

Harness Type: Engine

OEM Connector: 1928404114

Service Connector: SEE NOTE

Description: 2-Way F 2.8 Series, Sealed (BK)

### *Terminal Part Information*

| Terminal Type ID | Terminated Lead | Diagnostic Test Probe | Terminal Removal Tool | Service Terminal | Tray | Core Crimp | Insulation Crimp |
|---|---|---|---|---|---|---|---|
| I | Pending | Pending | Pending | Not Available | Not Available | Not Available | Not Available |

### *Q17D Fuel Injector 4 (LML)*

| Pin | Size | Color | Circuit | Function | Terminal Type ID | Option |
|---|---|---|---|---|---|---|
| 1 | 0.8 | L-BU/WH | 4904 | Direct Fuel Injector (DFI) High Voltage Supply Cylinder 4 | I | LML |
| 2 | 0.8 | L-BU | 4804 | Direct Fuel Injector (DFI) High Voltage Control Cylinder 4 | I | LML |

## Q17E Fuel Injector 5 (L96)

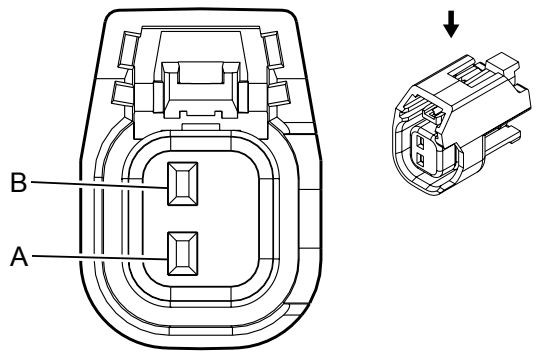


### Connector Part Information

Harness Type: Engine

OEM Connector: 15419715

Service Connector: 13580876

Description: 2-Way F 150 GT Series, Sealed (GY)

### *Terminal Part Information*

| Terminal Type ID | Terminated Lead | Diagnostic Test Probe | Terminal Removal Tool | Service Terminal | Tray | Core Crimp | Insulation Crimp |
|---|---|---|---|---|---|---|---|
| I | 13575412 | J-35616-2A (GY) | J-38125-553 | 12191819 | 8 | 2 | 1 |
| II | 13575298 | J-35616-2A (GY) | J-38125-553 | 12191819 | 8 | E | 1 |

### *Q17E Fuel Injector 5 (L96)*

| Pin | Size | Color | Circuit | Function | Terminal Type ID | Option |
|---|---|---|---|---|---|---|
| A | 0.75 | VT/D-BU | 5291 | Powertrain Main Relay Fused Supply (2) | I | - |
| B | 0.5 | BN/L-GN | 845 | Fuel Injector Control (5) | II | - |

## Q17E Fuel Injector 5 (LML)

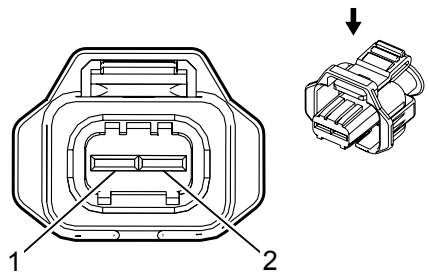


### Connector Part Information

Harness Type: Engine

OEM Connector: 1928404114

Service Connector: SEE NOTE

Description: 2-Way F 2.8 Series, Sealed (BK)

### *Terminal Part Information*

| Terminal Type ID | Terminated Lead | Diagnostic Test Probe | Terminal Removal Tool | Service Terminal | Tray | Core Crimp | Insulation Crimp |
|---|---|---|---|---|---|---|---|
| I | Pending | Pending | Pending | Not Available | Not Available | Not Available | Not Available |

### *Q17E Fuel Injector 5 (LML)*

| Pin | Size | Color | Circuit | Function | Terminal Type ID | Option |
|---|---|---|---|---|---|---|
| 1 | 0.8 | L-GN/WH | 4905 | Direct Fuel Injector (DFI) High Voltage Supply Cylinder 5 | I | LML |
| 2 | 0.8 | L-GN | 4805 | Direct Fuel Injector (DFI) High Voltage Control Cylinder 5 | I | LML |

## Q17F Fuel Injector 6 (L96)

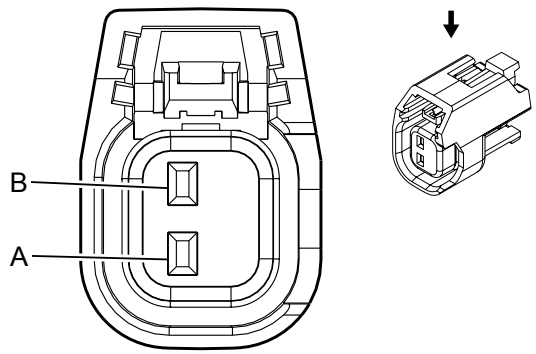


### Connector Part Information

Harness Type: Engine

OEM Connector: 15419715

Service Connector: 13580876

Description: 2-Way F 150 GT Series, Sealed (GY)

### *Terminal Part Information*

| Terminal Type ID | Terminated Lead | Diagnostic Test Probe | Terminal Removal Tool | Service Terminal | Tray | Core Crimp | Insulation Crimp |
|---|---|---|---|---|---|---|---|
| I | 13575412 | J-35616-2A (GY) | J-38125-553 | 12191819 | 8 | 2 | 1 |
| II | 13575298 | J-35616-2A (GY) | J-38125-553 | 12191819 | 8 | E | 1 |

### *Q17F Fuel Injector 6 (L96)*

| Pin | Size | Color | Circuit | Function | Terminal Type ID | Option |
|---|---|---|---|---|---|---|
| A | 0.75 | VT/D-BU | 5292 | Powertrain Main Relay Fused Supply (3) | I | - |
| B | 0.5 | BN/D-BU | 846 | Fuel Injector Control (6) | II | - |

## Q17F Fuel Injector 6 (LML)

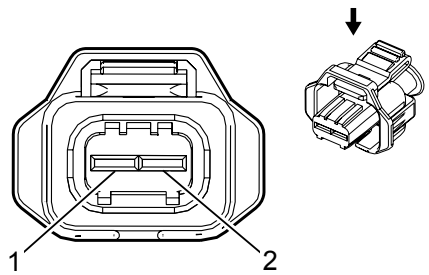


### Connector Part Information

Harness Type: Engine

OEM Connector: 1928404114

Service Connector: SEE NOTE

Description: 2-Way F 2.8 Series, Sealed (BK)

### *Terminal Part Information*

| Terminal Type ID | Terminated Lead | Diagnostic Test Probe | Terminal Removal Tool | Service Terminal | Tray | Core Crimp | Insulation Crimp |
|---|---|---|---|---|---|---|---|
| I | Pending | Pending | Pending | Not Available | Not Available | Not Available | Not Available |

### *Q17F Fuel Injector 6 (LML)*

| Pin | Size | Color | Circuit | Function | Terminal Type ID | Option |
|---|---|---|---|---|---|---|
| 1 | 0.8 | VT/WH | 4906 | Direct Fuel Injector (DFI) High Voltage Supply Cylinder 6 | I | LML |
| 2 | 0.8 | VT | 4806 | Direct Fuel Injector (DFI) High Voltage Control Cylinder 6 | I | LML |

## Q17G Fuel Injector 7 (L96)

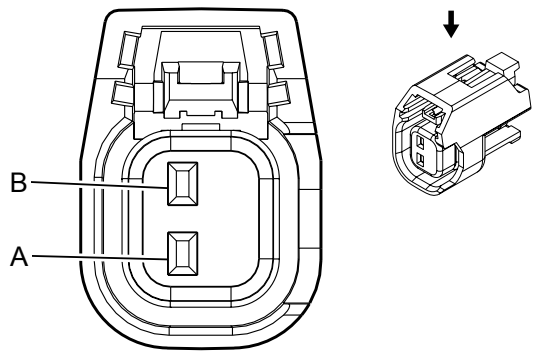


### Connector Part Information

Harness Type: Engine

OEM Connector: 15419715

Service Connector: 13580876

Description: 2-Way F 150 GT Series, Sealed (GY)

### *Terminal Part Information*

| Terminal Type ID | Terminated Lead | Diagnostic Test Probe | Terminal Removal Tool | Service Terminal | Tray | Core Crimp | Insulation Crimp |
|---|---|---|---|---|---|---|---|
| I | 13575412 | J-35616-2A (GY) | J-38125-553 | 12191819 | 8 | 2 | 1 |
| II | 13575298 | J-35616-2A (GY) | J-38125-553 | 12191819 | 8 | E | 1 |

### *Q17G Fuel Injector 7 (L96)*

| Pin | Size | Color | Circuit | Function | Terminal Type ID | Option |
|---|---|---|---|---|---|---|
| A | 0.75 | VT/D-BU | 5291 | Powertrain Main Relay Fused Supply (2) | I | - |
| B | 0.5 | BN/VT | 877 | Fuel Injector Control (7) | II | - |

## Q17G Fuel Injector 7 (LML)

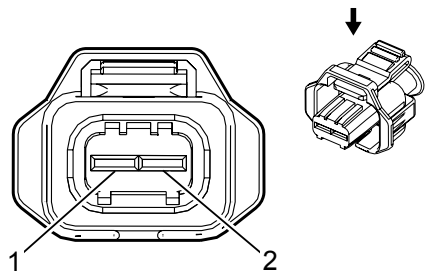


### Connector Part Information

Harness Type: Engine

OEM Connector: 1928404114

Service Connector: SEE NOTE

Description: 2-Way F 2.8 Series, Sealed (BK)

### *Terminal Part Information*

| Terminal Type ID | Terminated Lead | Diagnostic Test Probe | Terminal Removal Tool | Service Terminal | Tray | Core Crimp | Insulation Crimp |
|---|---|---|---|---|---|---|---|
| I | Pending | Pending | Pending | Not Available | Not Available | Not Available | Not Available |

### *Q17G Fuel Injector 7 (LML)*

| Pin | Size | Color | Circuit | Function | Terminal Type ID | Option |
|---|---|---|---|---|---|---|
| 1 | 0.8 | WH | 4907 | Direct Fuel Injector (DFI) High Voltage Supply Cylinder 7 | I | LML |
| 2 | 0.8 | | 4807 | Direct Fuel Injector (DFI) High Voltage Control Cylinder 7 | I | LML |

## Q17H Fuel Injector 8 (L96)

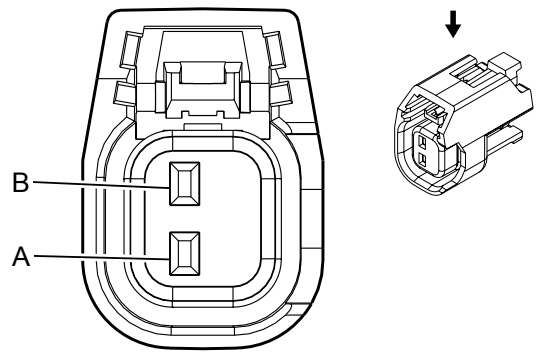


### Connector Part Information

Harness Type: Engine

OEM Connector: 15419715

Service Connector: 13580876

Description: 2-Way F 150 GT Series, Sealed (GY)

### *Terminal Part Information*

| Terminal Type ID | Terminated Lead | Diagnostic Test Probe | Terminal Removal Tool | Service Terminal | Tray | Core Crimp | Insulation Crimp |
|---|---|---|---|---|---|---|---|
| I | 13575412 | J-35616-2A (GY) | J-38125-553 | 12191819 | 8 | 2 | 1 |
| II | 13575298 | J-35616-2A (GY) | J-38125-553 | 12191819 | 8 | E | 1 |

### *Q17H Fuel Injector 8 (L96)*

| Pin | Size | Color | Circuit | Function | Terminal Type ID | Option |
|---|---|---|---|---|---|---|
| A | 0.75 | VT/D-BU | 5292 | Powertrain Main Relay Fused Supply (3) | I | - |
| B | 0.5 | BN/GY | 878 | Fuel Injector Control (8) | II | - |

## Q17H Fuel Injector 8 (LML)

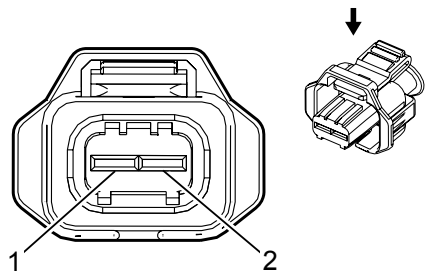


### Connector Part Information

Harness Type: Engine

OEM Connector: 1928404114

Service Connector: SEE NOTE

Description: 2-Way F 2.8 Series, Sealed (BK)

### *Terminal Part Information*

| Terminal Type ID | Terminated Lead | Diagnostic Test Probe | Terminal Removal Tool | Service Terminal | Tray | Core Crimp | Insulation Crimp |
|---|---|---|---|---|---|---|---|
| I | Pending | Pending | Pending | Not Available | Not Available | Not Available | Not Available |

### *Q17H Fuel Injector 8 (LML)*

| Pin | Size | Color | Circuit | Function | Terminal Type ID | Option |
|---|---|---|---|---|---|---|
| 1 | 0.8 | GY/WH | 4908 | Direct Fuel Injector (DFI) High Voltage Supply Cylinder 8 | I | LML |
| 2 | 0.8 | GY | 4808 | Direct Fuel Injector (DFI) High Voltage Control Cylinder 8 | I | LML |

## Q18B Fuel Pressure Regulator 2 (LML)

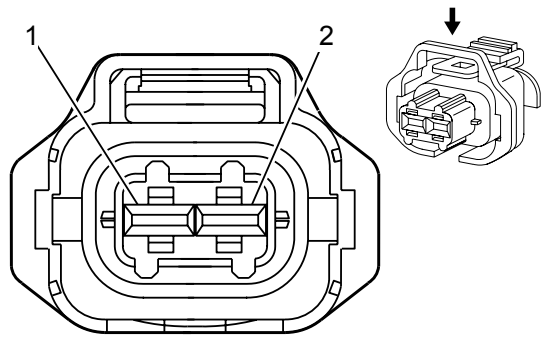


### Connector Part Information

Harness Type: Engine

OEM Connector: 1928403874

Service Connector: 88988963

Description: 2-Way F Kompakt 2.8 Series, Sealed (BK)

### *Terminal Part Information*

| Terminal Type ID | Terminated Lead | Diagnostic Test Probe | Terminal Removal Tool | Service Terminal | Tray | Core Crimp | Insulation Crimp |
|---|---|---|---|---|---|---|---|
| I | Pending | Pending | Pending | Not Available | Not Available | Not Available | Not Available |

### *Q18B Fuel Pressure Regulator 2 (LML)*

| Pin | Size | Color | Circuit | Function | Terminal Type ID | Option |
|---|---|---|---|---|---|---|
| 1 | 0.8 | VT/WH | 2530 | Fuel Rail Pressure Solenoid Supply Voltage | I | LML |
| 2 | 0.8 | YE | 2834 | Fuel Rail Pressure Solenoid Low Reference | I | LML |

## Q37LF Shock Absorber Actuator - Left Front

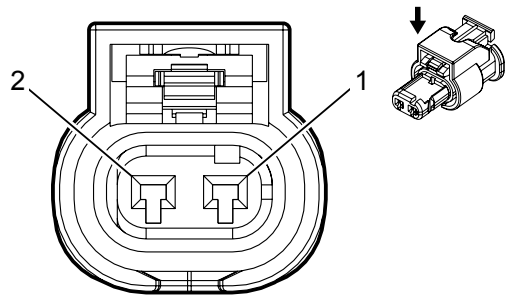


### Connector Part Information

Harness Type: Chassis

OEM Connector: 13627836

Service Connector: No SDC/FSU

Description: 2-Way F 1.2 Multiple Contact Point Series, Sealed (BK)

### *Terminal Part Information*

| Terminal Type ID | Terminated Lead | Diagnostic Test Probe | Terminal Removal Tool | Service Terminal | Tray | Core Crimp | Insulation Crimp |
|---|---|---|---|---|---|---|---|
| I | Not Available | J-35616-64B (L-BU) | J-38125-12A | Not Available | Not Available | Not Available | Not Available |

### *Q37LF Shock Absorber Actuator - Left Front*

| Pin | Size | Color | Circuit | Function | Terminal Type ID | Option |
|---|---|---|---|---|---|---|
| 1 | 0.75 | WH/GY | 1448 | Left Front Strut Motor Increase Damping | I | - |
| 2 | 0.75 | WH/L-GN | 1005 | Left Front Strut Motor Decrease Damping Control | I | - |

## Q37LR Shock Absorber Actuator - Left Rear

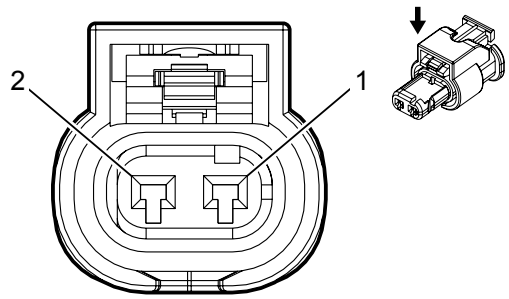


### Connector Part Information

Harness Type: Chassis

OEM Connector: 13627836

Service Connector: No SDC/FSU

Description: 2-Way F 1.2 Multiple Contact Point Series, Sealed (BK)

### *Terminal Part Information*

| Terminal Type ID | Terminated Lead | Diagnostic Test Probe | Terminal Removal Tool | Service Terminal | Tray | Core Crimp | Insulation Crimp |
|---|---|---|---|---|---|---|---|
| I | Not Available | J-35616-64B (L-BU) | J-38125-12A | Not Available | Not Available | Not Available | Not Available |

### *Q37LR Shock Absorber Actuator - Left Rear*

| Pin | Size | Color | Circuit | Function | Terminal Type ID | Option |
|---|---|---|---|---|---|---|
| 1 | 0.75 | BN/VT | 1010 | Left Rear Strut Motor Increase Damping Control | I | - |
| 2 | 0.75 | WH/BK | 1013 | Left Rear Strut Motor Decrease Damping Control | I | - |

## Q37RF Shock Absorber Actuator - Right Front

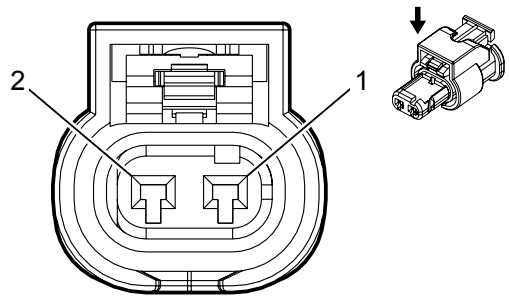


### Connector Part Information

Harness Type: Chassis

OEM Connector: 13627836

Service Connector: No SDC/FSU

Description: 2-Way F 1.2 Multiple Contact Point Series, Sealed (BK)

### *Terminal Part Information*

| Terminal Type ID | Terminated Lead | Diagnostic Test Probe | Terminal Removal Tool | Service Terminal | Tray | Core Crimp | Insulation Crimp |
|---|---|---|---|---|---|---|---|
| I | Not Available | J-35616-64B (L-BU) | J-38125-12A | Not Available | Not Available | Not Available | Not Available |

### *Q37RF Shock Absorber Actuator - Right Front*

| Pin | Size | Color | Circuit | Function | Terminal Type ID | Option |
|---|---|---|---|---|---|---|
| 1 | 0.75 | WH/BK | 1006 | Right Front Strut Motor Increase Damping Control | I | - |
| 2 | 0.75 | BN | 1009 | Right Front Strut Motor Decrease Damping Control | I | - |

## Q37RR Shock Absorber Actuator - Right Rear

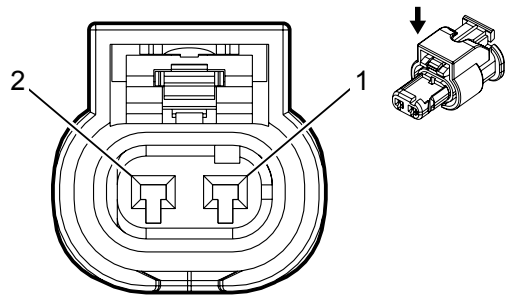


### Connector Part Information

Harness Type: Chassis

OEM Connector: 13627836

Service Connector: No SDC/FSU

Description: 2-Way F 1.2 Multiple Contact Point Series, Sealed (BK)

### *Terminal Part Information*

| Terminal Type ID | Terminated Lead | Diagnostic Test Probe | Terminal Removal Tool | Service Terminal | Tray | Core Crimp | Insulation Crimp |
|---|---|---|---|---|---|---|---|
| I | Not Available | J-35616-64B (L-BU) | J-38125-12A | Not Available | Not Available | Not Available | Not Available |

### *Q37RR Shock Absorber Actuator - Right Rear*

| Pin | Size | Color | Circuit | Function | Terminal Type ID | Option |
|---|---|---|---|---|---|---|
| 1 | 0.75 | YE | 1014 | Right Rear Strut Motor Increase Damping | I | - |
| 2 | 0.75 | VT | 1017 | Right Rear Strut Motor Decrease Damping | I | - |

## Q38 Throttle Body (1500)

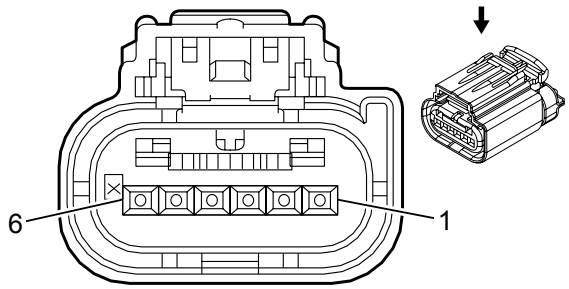


### Connector Part Information

Harness Type: Engine

OEM Connector: 13699991

Service Connector: 13581267

Description: 6-Way F 0.64 GET Series, Sealed (BK)

### *Terminal Part Information*

| Terminal Type ID | Terminated Lead | Diagnostic Test Probe | Terminal Removal Tool | Service Terminal | Tray | Core Crimp | Insulation Crimp |
|---|---|---|---|---|---|---|---|
| I | Not Available | J-35616-64B (L-BU) | J-38125-553 | Not Available | Not Available | Not Available | Not Available |

### *Q38 Throttle Body (1500)*

| Pin | Size | Color | Circuit | Function | Terminal Type ID | Option |
|---|---|---|---|---|---|---|
| 1 | 0.5 | YE | 581 | Throttle Actuator Control Open | I | - |
| 2 | 0.5 | BN/WH | 582 | Throttle Actuator Control Close | I | - |
| 3 | 0.5 | D-BU/WH | 3630 | Throttle Position Sensor (SENT1) Signal | I | - |
| 4 | 0.5 | BK/BN | 2752 | Throttle Position Sensor Low Reference | I | - |
| 5 | 0.5 | BN/RD | 2701 | Throttle Position Sensor 5 Volt Reference | I | - |
| 6 | - | - | - | Not Occupied | - | - |

## Q38 Throttle Body (L96)

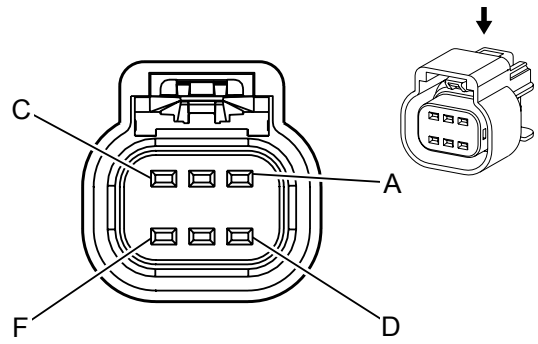


### Connector Part Information

Harness Type: Engine

OEM Connector: 15418497

Service Connector: 13584095

Description: 6-Way F 150 GT Series, Sealed (BK)

### *Terminal Part Information*

| Terminal Type ID | Terminated Lead | Diagnostic Test Probe | Terminal Removal Tool | Service Terminal | Tray | Core Crimp | Insulation Crimp |
|---|---|---|---|---|---|---|---|
| I | Pending | J-35616-2A (GY) | J-38125-553 | 15326427 | 5 | E | A |

### *Q38 Throttle Body (L96)*

| Pin | Size | Color | Circuit | Function | Terminal Type ID | Option |
|---|---|---|---|---|---|---|
| A | 0.5 | BN/WH | 582 | Throttle Actuator Control Close | I | - |
| B | 0.5 | YE | 581 | Throttle Actuator Control Open | I | - |
| C | 0.5 | BK/BN | 2752 | Throttle Position Sensor Low Reference | I | - |
| D | 0.5 | BN/L-GN | 485 | Throttle Position Sensor Signal (1) | I | - |
| E | 0.5 | BN/RD | 2701 | Throttle Position Sensor 5 Volt Reference | I | - |
| F | 0.5 | BN/D-BU | 486 | Throttle Position Sensor Signal (2) | I | - |

## Q38 Throttle Body (LML)

### Connector Part Information

Harness Type: Engine

OEM Connector: 114381533

Service Connector: Pending

Description: 6 F 0.64 GET Series, Sealed

### *Terminal Part Information*

| Terminal Type ID | Terminated Lead | Diagnostic Test Probe | Terminal Removal Tool | Service Terminal | Tray | Core Crimp | Insulation Crimp |
|---|---|---|---|---|---|---|---|
| I | Pending | Pending | Pending | Not Available | Not Available | Not Available | Not Available |

### *Q38 Throttle Body (LML)*

| Pin | Size | Color | Circuit | Function | Terminal Type ID | Option |
|---|---|---|---|---|---|---|
| 1 | 0.8 | YE | 581 | Throttle Actuator Control Open | I | LML |
| 2 | 0.8 | BR | 582 | Throttle Actuator Control Close | I | LML |
| 3 | 0 | D-GN | 485 | Throttle Position Sensor Signal (1) | I | LML |
| 4 | 0 | | 2752 | Throttle Position Sensor Low Reference | I | LML |
| 5 | 0 | GY | 2701 | Throttle Position Sensor 5 Volt Reference | I | LML |
| 6 | - | - | - | Not Occupied | - | - |

## Q41 Turbocharger Vane Position Control Solenoid Valve (LML)

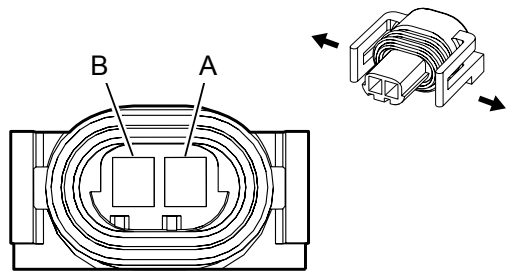


### Connector Part Information

Harness Type: Engine

OEM Connector: 12162215

Service Connector: 12085496

Description: 2-Way F 150.2 Metri Pack Series, Sealed, Pull To Seat (BK)

### *Terminal Part Information*

| Terminal Type ID | Terminated Lead | Diagnostic Test Probe | Terminal Removal Tool | Service Terminal | Tray | Core Crimp | Insulation Crimp |
|---|---|---|---|---|---|---|---|
| I | Pending | Pending | Pending | Not Available | Not Available | Not Available | Not Available |

### *Q41 Turbocharger Vane Position Control Solenoid Valve (LML)*

| Pin | Size | Color | Circuit | Function | Terminal Type ID | Option |
|---|---|---|---|---|---|---|
| A | 0.5 | BU | 5930 | Variable Nozzle Turbo Solenoid High Signal | I | LML |
| B | 0.5 | WH | 5931 | Variable Nozzle Turbo Solenoid Low Signal | I | LML |

## Q43 Valve Lifter Oil Manifold Assembly

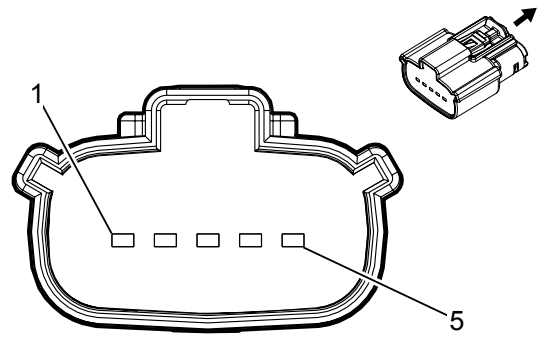


### Connector Part Information

Harness Type: Engine

OEM Connector: 13843947

Service Connector: 19301721

Description: 5-Way F 150 MX Series, Sealed (BK)

Harness Type: Engine

OEM Connector: 13845946

Service Connector: 19301719

Description: 5-Way F 150 MX Series, Sealed (BK)

### *Terminal Part Information*

| Terminal Type ID | Terminated Lead | Diagnostic Test Probe | Terminal Removal Tool | Service Terminal | Tray | Core Crimp | Insulation Crimp |
|---|---|---|---|---|---|---|---|
| I | Not Available | Not Available | Not Available | Not Available | Not Available | Not Available | Not Available |
| II | Not Available | J-35616-14 (GN) | J-38125-217 | Not Available | Not Available | Not Available | Not Available |

### *Q43 Valve Lifter Oil Manifold Assembly*

| Pin | Size | Color | Circuit | Function | Terminal Type ID | Option |
|---|---|---|---|---|---|---|
| 1 | 0.5<br>0.5 | D-BU<br>YE/D-BU | 5491<br>5494 | Cylinder Shutoff Solenoid Control (1)<br>Cylinder Shutoff Solenoid Control (4) | I | - |
| 2 | 0.5 | GY | 5493 | Cylinder Shutoff Solenoid Control (3) | I | - |
| 3 | 0.75<br>0.5 | VT/D-BU<br>D-BU | 5293<br>5491 | Powertrain Main Relay Fused Supply (4)<br>Cylinder Shutoff Solenoid Control (1) | II | - |
| 4 | 0.75 | VT/D-BU | 5293 | Powertrain Main Relay Fused Supply (4) | I | - |
| 5 | 0.5 | L-GN | 5492 | Cylinder Shutoff Solenoid Control (2) | I | - |

## Q44 Engine Oil Pressure Control Solenoid Valve

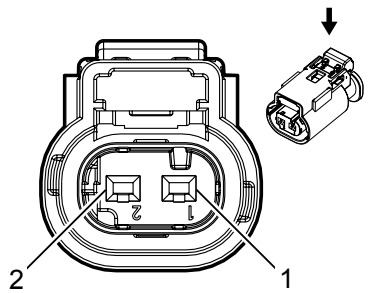


### Connector Part Information

Harness Type:

OEM Connector: 13503566

Service Connector: 13587326

Description: 2 F 1.2 MLK Series, Sealed (BK)

### *Terminal Part Information*

| Terminal Type ID | Terminated Lead | Diagnostic Test Probe | Terminal Removal Tool | Service Terminal | Tray | Core Crimp | Insulation Crimp |
|---|---|---|---|---|---|---|---|
| I | Not Available | Not Available | Not Available | Not Available | Not Available | Not Available | Not Available |

### *Q44 Engine Oil Pressure Control Solenoid Valve*

| Pin | Size | Color | Circuit | Function | Terminal Type ID | Option |
|---|---|---|---|---|---|---|
| 1 | 0.5 | VT/BU | 5293 | Powertrain Main Relay Fused Supply (4) | I | - |
| 2 | 0.5 | BU | 179 | Oil Pump Command Signal | I | - |

## Q46 A/C Compressor Solenoid Valve

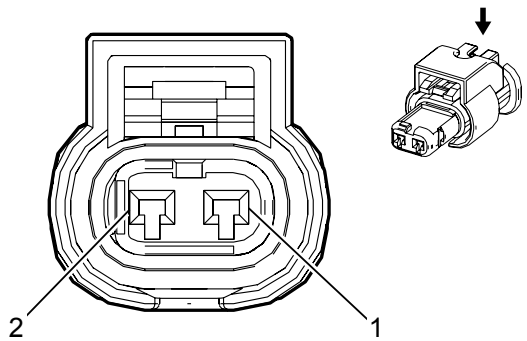


### Connector Part Information

Harness Type: Engine

OEM Connector: 13927762

Service Connector: 19299928

Description: 2-Way F 1.2 MCP Series, Sealed (BK with NA Inner Connector)

### *Terminal Part Information*

| Terminal Type ID | Terminated Lead | Diagnostic Test Probe | Terminal Removal Tool | Service Terminal | Tray | Core Crimp | Insulation Crimp |
|---|---|---|---|---|---|---|---|
| I | Pending | J-35616-16 (L-GN) | J-38125-12A | Not Available | Not Available | Not Available | Not Available |

### *Q46 A/C Compressor Solenoid Valve*

| Pin | Size | Color | Circuit | Function | Terminal Type ID | Option |
|---|---|---|---|---|---|---|
| 1 | 0.75 | D-BU/YE | 7574 | Electric Variable Displacement Control | I | - |
| 2 | 0.75 | D-BU/BN | 7573 | Electric Variable Displacement Supply | I | - |

## Q47 Exhaust Gas Recirculation Cooler Bypass Solenoid Valve (LML)

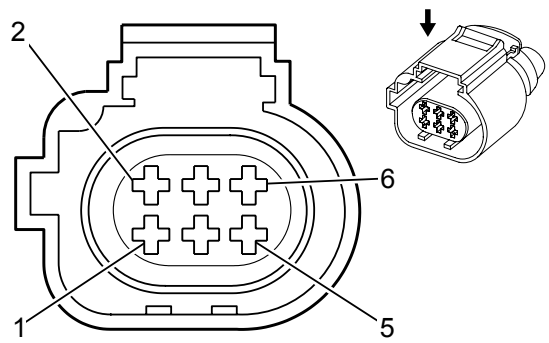


### Connector Part Information

Harness Type: Engine

OEM Connector: 284716-3

Service Connector: 13586128

Description: 6-Way F 1.6 Micro Timer Series, Sealed (BN)

### *Terminal Part Information*

| Terminal Type ID | Terminated Lead | Diagnostic Test Probe | Terminal Removal Tool | Service Terminal | Tray | Core Crimp | Insulation Crimp |
|---|---|---|---|---|---|---|---|
| I | Pending | Pending | Pending | Not Available | Not Available | Not Available | Not Available |

### *Q47 Exhaust Gas Recirculation Cooler Bypass Solenoid Valve (LML)*

| Pin | Size | Color | Circuit | Function | Terminal Type ID | Option |
|---|---|---|---|---|---|---|
| 1 | 0 | GY | 3652 | EGR Cooler Bypass Position Sensor 5V Reference | I | LML |
| 2 | 0 | OG/BK | 3656 | EGR Cooler Bypass Motor Close Control | I | LML |
| 3 | 0 | | 3653 | EGR Cooler Bypass Position Sensor Low Reference | I | LML |
| 4 | - | - | - | Not Occupied | - | - |
| 5 | 0 | GN/WH | 3654 | EGR Cooler Bypass Position Sensor Signal | I | LML |
| 6 | 0 | L-GN | 3655 | EGR Cooler Bypass Motor Open Control | I | LML |

## Q47 Exhaust Gas Recirculation Cooler Bypass Solenoid Valve (LML)

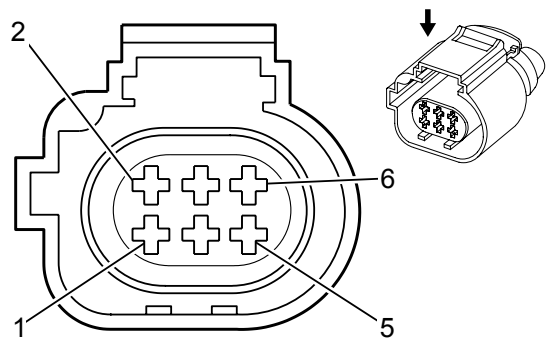


### Connector Part Information

Harness Type: Engine

OEM Connector: 284716-3

Service Connector: 13586128

Description: 6-Way F 1.6 Micro Timer Series, Sealed (BN)

### *Terminal Part Information*

| Terminal Type ID | Terminated Lead | Diagnostic Test Probe | Terminal Removal Tool | Service Terminal | Tray | Core Crimp | Insulation Crimp |
|---|---|---|---|---|---|---|---|
| I | Not Available | Not Available | Not Available | Not Available | Not Available | Not Available | Not Available |

### *Q47 Exhaust Gas Recirculation Cooler Bypass Solenoid Valve (LML)*

| Pin | Size | Color | Circuit | Function | Terminal Type ID | Option |
|---|---|---|---|---|---|---|
| 1 | 0.50F | GY | 3652 | EGR Cooler Bypass Position Sensor 5V Reference | I | - |
| 2 | 0.50F | OG/BK | 3656 | EGR Cooler Bypass Motor Close Control | I | - |
| 3 | 0.50F | | 3653 | EGR Cooler Bypass Position Sensor Low Reference | I | - |
| 4 | - | - | - | Not Occupied | - | - |
| 5 | 0.50F | GN/WH | 3654 | EGR Cooler Bypass Position Sensor Signal | I | - |
| 6 | 0.50F | L-GN | 3655 | EGR Cooler Bypass Motor Open Control | I | - |

## Q61 Reductant Injector (LML)

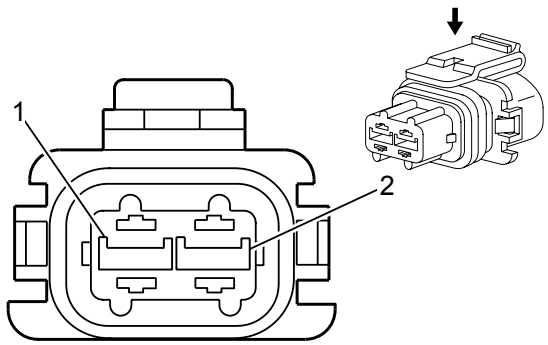


### Connector Part Information

Harness Type: Engine

OEM Connector: 10740370

Service Connector: 88988586

Description: 2-Way F 2.8 Junior Power Timer Series, Sealed (BK)

### *Terminal Part Information*

| Terminal Type ID | Terminated Lead | Diagnostic Test Probe | Terminal Removal Tool | Service Terminal | Tray | Core Crimp | Insulation Crimp |
|---|---|---|---|---|---|---|---|
| I | 13579758 | J-35616-35 (VT) | J-38125-561 | 1928498058 | 8 | E | 1 |

### *Q61 Reductant Injector (LML)*

| Pin | Size | Color | Circuit | Function | Terminal Type ID | Option |
|---|---|---|---|---|---|---|
| 1 | 0.75 | BN | 3099 | DEF Dosing Valve High Control | I | - |
| 2 | 0.75 | BN/WH | 3100 | DEF Dosing Valve Low Control | I | - |

## Q61 Reductant Injector

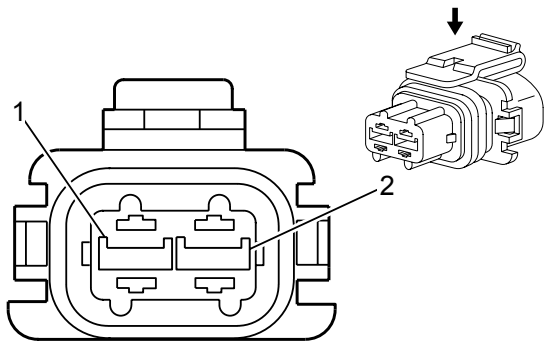


### Connector Part Information

Harness Type: Engine

OEM Connector: 10740370

Service Connector: 88988586

Description: 2-Way F 2.8 Junior Power Timer Series, Sealed (BK)

### *Terminal Part Information*

| Terminal Type ID | Terminated Lead | Diagnostic Test Probe | Terminal Removal Tool | Service Terminal | Tray | Core Crimp | Insulation Crimp |
|---|---|---|---|---|---|---|---|
| I | 13579758 | J-35616-35 (VT) | J-38125-561 | 1928498058 | 8 | E | 1 |

### *Q61 Reductant Injector*

| Pin | Size | Color | Circuit | Function | Terminal Type ID | Option |
|---|---|---|---|---|---|---|
| 1 | 0.75 | BN | 3099 | DEF Dosing Valve High Control | I | - |
| 2 | 0.75 | BN/WH | 3100 | DEF Dosing Valve Low Control | I | - |

## Q67 Exhaust Aftertreatment Fuel Injector (LML)

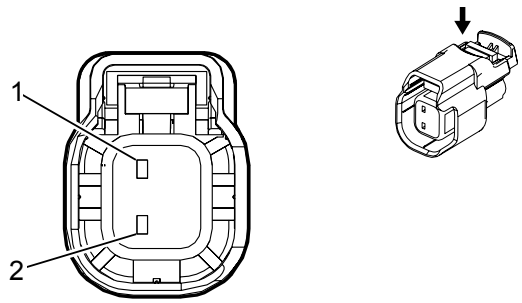


### Connector Part Information

Harness Type: Engine

OEM Connector: 34062-0025

Service Connector: No SDC/FSU

Description: 2-Way F 1.5 Series, Sealed (BK)

### *Terminal Part Information*

| Terminal Type ID | Terminated Lead | Diagnostic Test Probe | Terminal Removal Tool | Service Terminal | Tray | Core Crimp | Insulation Crimp |
|---|---|---|---|---|---|---|---|
| I | Pending | Pending | Pending | Not Available | Not Available | Not Available | Not Available |

### *Q67 Exhaust Aftertreatment Fuel Injector (LML)*

| Pin | Size | Color | Circuit | Function | Terminal Type ID | Option |
|---|---|---|---|---|---|---|
| 1 | 0 | VT | 2927 | Hydrocarbon Injector Low Control | I | LML |
| 2 | 0 | BU | 2926 | Hydrocarbon Injector High Control | I | LML |

## R6A Terminating Resistor - High Speed Bus

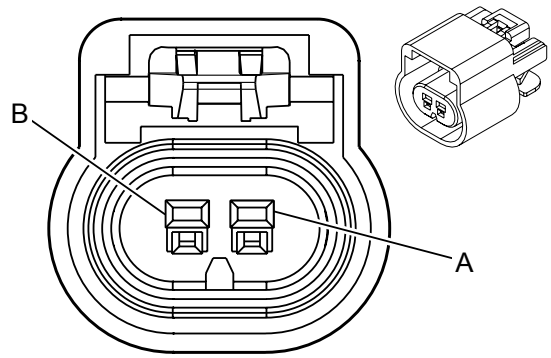


### Connector Part Information

Harness Type: Chassis

OEM Connector: 13510085

Service Connector: 13580114

Description: 2-Way F 150 GT Series, Sealed (BK)

### *Terminal Part Information*

| Terminal Type ID | Terminated Lead | Diagnostic Test Probe | Terminal Removal Tool | Service Terminal | Tray | Core Crimp | Insulation Crimp |
|---|---|---|---|---|---|---|---|
| I | 13575298 | J-35616-2A (GY) | J-38125-553 | 12191819 | 8 | E | 1 |

### *R6A Terminating Resistor - High Speed Bus*

| Pin | Size | Color | Circuit | Function | Terminal Type ID | Option |
|---|---|---|---|---|---|---|
| A | 0.5 | D-BU | 2500 | High Speed GMLAN Serial Data (+) (1) | I | - |
| B | 0.5 | WH | 2501 | High Speed GMLAN Serial Data (-) (1) | I | - |

## S3 Transmission Shift Lever

### Connector Part Information

Harness Type:

OEM Connector: HCMDWSB-04-K

Service Connector: Service by Harness - See Part Catalog

Description: 4 M

### *Terminal Part Information*

| Terminal Type ID | Terminated Lead | Diagnostic Test Probe | Terminal Removal Tool | Service Terminal | Tray | Core Crimp | Insulation Crimp |
|---|---|---|---|---|---|---|---|
| I | Not Available | Not Available | Not Available | Not Available | Not Available | Not Available | Not Available |

### *S3 Transmission Shift Lever*

| Pin | Size | Color | Circuit | Function | Terminal Type ID | Option |
|---|---|---|---|---|---|---|
| 1 | 0.5 | BU/GY | 553 | Shift Select Switch Performance Signal | I | - |
| 2 | 0.5 | BK/WH | 1851 | Signal Ground | I | - |
| 3 | 0.5 | VT/YE | 5526 | Tap Up/Tap Down Switch Signal | I | - |
| 4 | 0.5 | BK/WH | 1851 | Signal Ground | I | - |

## S5 Center Console Compartment Lamp Switch

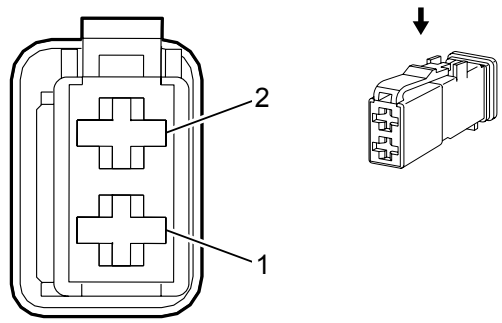


### Connector Part Information

Harness Type: Floor Console

OEM Connector: 10787635

Service Connector: 19167758

Description: 2-Way F 1.2 Timer Series (NA)

### *Terminal Part Information*

| Terminal Type ID | Terminated Lead | Diagnostic Test Probe | Terminal Removal Tool | Service Terminal | Tray | Core Crimp | Insulation Crimp |
|---|---|---|---|---|---|---|---|
| I | Pending | J-35616-14 (GN) | J-38125-560 | 964274-2 | 16 | E | 1 |

### *S5 Center Console Compartment Lamp Switch*

| Pin | Size | Color | Circuit | Function | Terminal Type ID | Option |
|---|---|---|---|---|---|---|
| 1 | 0.5 | WH/BN | 6815 | Inadvertent Power Control | I | - |
| 2 | 0.5 | WH/BN | 6815 | Inadvertent Power Control | I | - |

## S12 Dome Lamp Switch

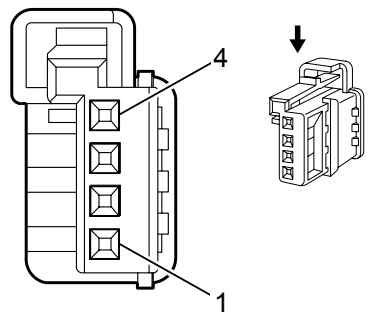


### Connector Part Information

Harness Type: Overhead Console

OEM Connector: 13862319

Service Connector: 13587956

Description: 4-Way F 0.64 Micro Quadlok Series (BK)

### *Terminal Part Information*

| Terminal Type ID | Terminated Lead | Diagnostic Test Probe | Terminal Removal Tool | Service Terminal | Tray | Core Crimp | Insulation Crimp |
|---|---|---|---|---|---|---|---|
| I | 13575390 | J-35616-64B (L-BU) | J-38125-12A | 928999-5 | 15 | J | J |
| II | 13575390 | J-35616-64B (L-BU) | J-38125-12A | 928999-5 | 15 | H | H |

### *S12 Dome Lamp Switch*

| Pin | Size | Color | Circuit | Function | Terminal Type ID | Option |
|---|---|---|---|---|---|---|
| 1 | 0.5 | BK | 1050 | Ground | I | - |
| 2 | 0.35 | GY/L-GN | 328 | Interior Lamp Defeat Switch Signal | II | - |
| 3 | 0.35 | GY | 156 | Courtesy Lamp Switch Signal | II | - |
| 4 | 0.35 | YE | 6817 | LED Backlight Dimming Control | II | - |

## S13D Door Lock Switch - Driver

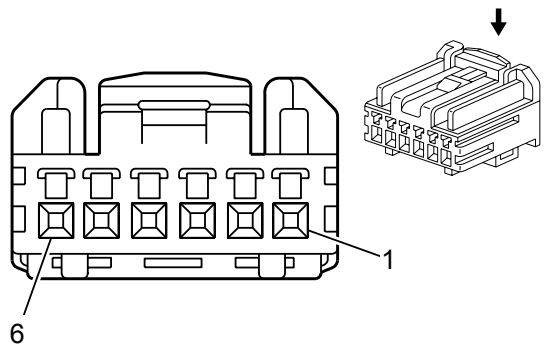


### Connector Part Information

Harness Type: Driver Door Trim

OEM Connector: 15484551

Service Connector: 19153174

Description: 6-Way F 0.64 HCM Series (BK)

### *Terminal Part Information*

| Terminal Type ID | Terminated Lead | Diagnostic Test Probe | Terminal Removal Tool | Service Terminal | Tray | Core Crimp | Insulation Crimp |
|---|---|---|---|---|---|---|---|
| I | Pending | J-35616-64B (L-BU) | J-38125-12A | SHCM-A03T-P025 | 20 | J | J |

### *S13D Door Lock Switch - Driver*

| Pin | Size | Color | Circuit | Function | Terminal Type ID | Option |
|---|---|---|---|---|---|---|
| 1 | - | - | - | Not Occupied | - | - |
| 2 | 0.35 | YE | 6817 | LED Backlight Dimming Control | I | - |
| 3 | 0.35 | BN/YE | 780 | Driver Door Lock Switch Lock Signal | I | - |
| 4 | 0.35 | BN/WH | 781 | Driver Door Lock Switch Unlock Signal | I | - |
| 5 | 0.35 | BK | 1150 | Ground | I | - |
| 6 | - | - | - | Not Occupied | - | - |

## S13D Door Lock Switch - Driver

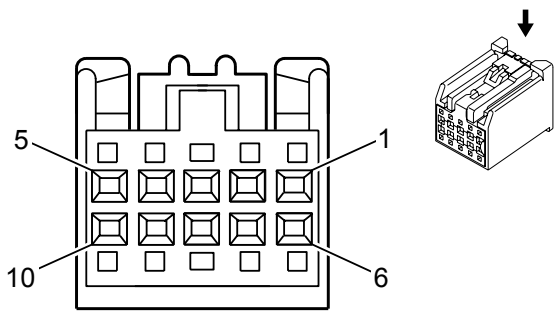


### Connector Part Information

Harness Type: Driver Door Trim

OEM Connector: 13815336

Service Connector: 13577390

Description: 10-Way F 0.64 Kaizen Series (BK)

### *Terminal Part Information*

| Terminal Type ID | Terminated Lead | Diagnostic Test Probe | Terminal Removal Tool | Service Terminal | Tray | Core Crimp | Insulation Crimp |
|---|---|---|---|---|---|---|---|
| I | 13327120 | J-35616-64B (L-BU) | J-38125-215A | SAIT-A03T-M064 | 14 | P | P |

### *S13D Door Lock Switch - Driver*

| Pin | Size | Color | Circuit | Function | Terminal Type ID | Option |
|---|---|---|---|---|---|---|
| 1 | 0.35 | BK | 1150 | Ground | I | - |
| 2-3 | - | - | - | Not Occupied | - | - |
| 4 | 0.35 | YE | 6817 | LED Backlight Dimming Control | I | - |
| 5 | - | - | - | Not Occupied | - | - |
| 6 | 0.35 | BN/YE | 780 | Driver Door Lock Switch Lock Signal | I | - |
| 7 | 0.35 | BN/WH | 781 | Driver Door Lock Switch Unlock Signal | I | - |
| 8-10 | - | - | - | Not Occupied | - | - |

## S13P Door Lock Switch - Passenger

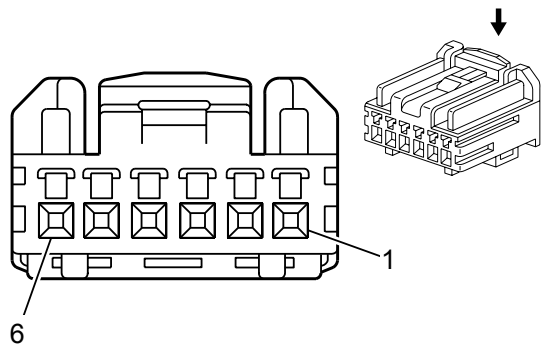


### Connector Part Information

Harness Type: Passenger Door Trim

OEM Connector: 15484551

Service Connector: 19153174

Description: 6-Way F 0.64 HCM Series (BK)

### *Terminal Part Information*

| Terminal Type ID | Terminated Lead | Diagnostic Test Probe | Terminal Removal Tool | Service Terminal | Tray | Core Crimp | Insulation Crimp |
|---|---|---|---|---|---|---|---|
| I | Pending | J-35616-64B (L-BU) | J-38125-12A | SHCM-A03T-P025 | 20 | J | J |

### *S13P Door Lock Switch - Passenger*

| Pin | Size | Color | Circuit | Function | Terminal Type ID | Option |
|---|---|---|---|---|---|---|
| 1 | - | - | - | Not Occupied | - | - |
| 2 | 0.35 | YE | 6817 | LED Backlight Dimming Control | I | - |
| 3 | 0.35 | YE/VT | 244 | Passenger Door Lock Switch Lock Control | I | - |
| 4 | 0.35 | BN/VT | 245 | Passenger Door Lock Switch Unlock Control | I | - |
| 5 | 0.35 | BK | 1250 | Ground | I | - |
| 6 | - | - | - | Not Occupied | - | - |

## S13P Door Lock Switch - Passenger

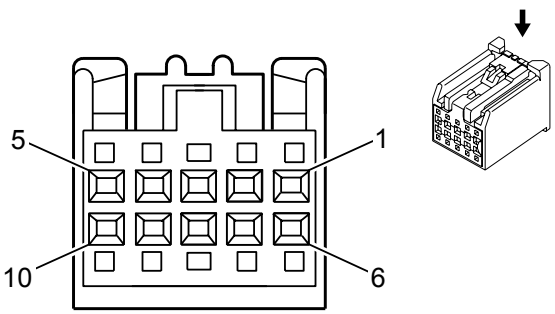


### Connector Part Information

Harness Type: Passenger Door Trim

OEM Connector: 13815336

Service Connector: 13577390

Description: 10-Way F 0.64 Kaizen Series (BK)

### *Terminal Part Information*

| Terminal Type ID | Terminated Lead | Diagnostic Test Probe | Terminal Removal Tool | Service Terminal | Tray | Core Crimp | Insulation Crimp |
|---|---|---|---|---|---|---|---|
| I | 13327120 | J-35616-64B (L-BU) | J-38125-215A | SAIT-A03T-M064 | 14 | P | P |

### *S13P Door Lock Switch - Passenger*

| Pin | Size | Color | Circuit | Function | Terminal Type ID | Option |
|---|---|---|---|---|---|---|
| 1 | 0.35 | BK | 1250 | Ground | I | - |
| 2-3 | - | - | - | Not Occupied | - | - |
| 4 | 0.35 | YE | 6817 | LED Backlight Dimming Control | I | - |
| 5 | - | - | - | Not Occupied | - | - |
| 6 | 0.35 | YE/VT | 244 | Passenger Door Lock Switch Lock Control | I | - |
| 7 | 0.35 | BN/VT | 245 | Passenger Door Lock Switch Unlock Control | I | - |
| 8-10 | - | - | - | Not Occupied | - | - |

## S25 Garage Door Opener

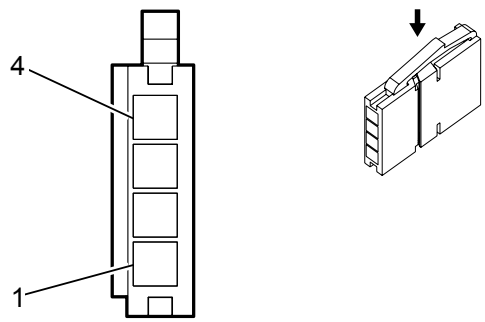


### Connector Part Information

Harness Type: Overhead Console

OEM Connector: 13879342

Service Connector: No SDC/FSU

Description: 4-Way F 0.50 OCS Series (BK)

### *Terminal Part Information*

| Terminal Type ID | Terminated Lead | Diagnostic Test Probe | Terminal Removal Tool | Service Terminal | Tray | Core Crimp | Insulation Crimp |
|---|---|---|---|---|---|---|---|
| I | Pending | Pending | Pending | Not Available | Not Available | Not Available | Not Available |

### *S25 Garage Door Opener*

| Pin | Size | Color | Circuit | Function | Terminal Type ID | Option |
|---|---|---|---|---|---|---|
| 1 | 0.35 | RD/YE | 240 | Battery Positive Voltage | I | - |
| 2 | 0.35 | YE | 6817 | LED Backlight Dimming Control | I | - |
| 3 | - | - | - | Not Occupied | - | - |
| 4 | 0.35 | BK | 1050 | Ground | I | - |

## S30 Headlamp Switch

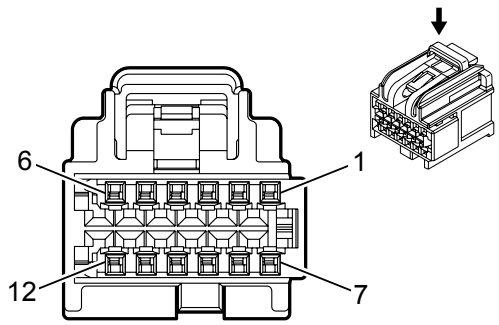


### Connector Part Information

Harness Type: Instrument Panel

OEM Connector: 13782625

Service Connector: 19301730

Description: 12-Way F 0.64 Series (BK)

### *Terminal Part Information*

| Terminal Type ID | Terminated Lead | Diagnostic Test Probe | Terminal Removal Tool | Service Terminal | Tray | Core Crimp | Insulation Crimp |
|---|---|---|---|---|---|---|---|
| I | Pending | Pending | Pending | Not Available | Not Available | Not Available | Not Available |

### *S30 Headlamp Switch*

| Pin | Size | Color | Circuit | Function | Terminal Type ID | Option |
|---|---|---|---|---|---|---|
| 1 | 0.35 | WH/VT | 103 | Headlamp Switch On Signal | I | - |
| 2 | 0.5 | YE | 6817 | LED Backlight Dimming Control | I | - |
| 3 | 0.35 | L-GN/BN | 306 | Headlamp Switch Headlamps Off Signal Control | I | - |
| 4 | - | - | - | Not Occupied | - | - |
| 5 | 0.35 | L-GN/GY | 13 | Headlamp Switch Park Lamp Signal | I | - |
| 6 | - | - | - | Not Occupied | - | - |
| 7 | 0.35 | BK/YE | 5005 | Instrument Panel Lamp Dimmer Switch Low Reference | I | - |
| 8 | 0.5 | BK | 1850 | Ground | I | - |
| 9 | - | - | - | Not Occupied | - | - |
| 10 | 0.35 | D-BU/GY | 192 | Front Fog Lamp Switch Signal | I | - |
| 11 | 0.35 | YE/GY | 44 | Instrument Panel Lamp Dimmer Switch Signal | I | - |
| 12 | 0.35 | D-BU/RD | 1688 | 5 Volt Reference | I | - |

## S31D Seat Heating and Cooling Switch - Driver

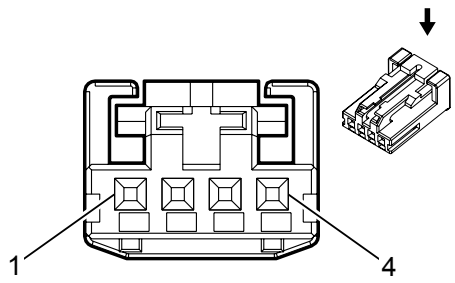


### Connector Part Information

Harness Type: Instrument Panel

OEM Connector: 13853727

Service Connector: 19300597

Description: 4-Way F 0.64 Micro Quadlock Series (BK)

### *Terminal Part Information*

| Terminal Type ID | Terminated Lead | Diagnostic Test Probe | Terminal Removal Tool | Service Terminal | Tray | Core Crimp | Insulation Crimp |
|---|---|---|---|---|---|---|---|
| I | Pending | J-35616-64B (L-BU) | J-38125-12A | 928999-5 | 15 | J | J |
| II | Pending | J-35616-64B (L-BU) | J-38125-12A | 928999-5 | 15 | H | H |

### *S31D Seat Heating and Cooling Switch - Driver*

| Pin | Size | Color | Circuit | Function | Terminal Type ID | Option |
|---|---|---|---|---|---|---|
| 1 | 0.5 | BK | 1850 | Ground | I | - |
| 2 | - | - | - | Not Occupied | - | - |
| 3 | 0.5 | L-GN/WH | 7527 | Linear Interconnect Network Bus 5 | I | - |
| 4 | 0.35 | RD/GY | 2840 | Battery Positive Voltage | II | - |

## S31P Seat Heating and Cooling Switch - Passenger

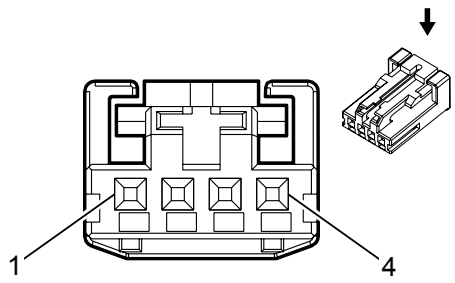


### Connector Part Information

Harness Type: Instrument Panel

OEM Connector: 13853727

Service Connector: 19300597

Description: 4-Way F 0.64 Micro Quadlock Series (BK)

### *Terminal Part Information*

| Terminal Type ID | Terminated Lead | Diagnostic Test Probe | Terminal Removal Tool | Service Terminal | Tray | Core Crimp | Insulation Crimp |
|---|---|---|---|---|---|---|---|
| I | 13575390 | J-35616-64B (L-BU) | J-38125-12A | 928999-5 | 15 | H | H |
| II | 13575390 | J-35616-64B (L-BU) | J-38125-12A | 928999-5 | 15 | J | J |

### *S31P Seat Heating and Cooling Switch - Passenger*

| Pin | Size | Color | Circuit | Function | Terminal Type ID | Option |
|---|---|---|---|---|---|---|
| 1 | 0.35 | RD/GY | 2840 | Battery Positive Voltage | I | - |
| 2 | 0.5 | L-GN/WH | 7527 | Linear Interconnect Network Bus 5 | II | - |
| 3 | - | - | - | Not Occupied | - | - |
| 4 | 0.5 | BK | 1850 | Ground | II | - |

## S38 Ignition Switch

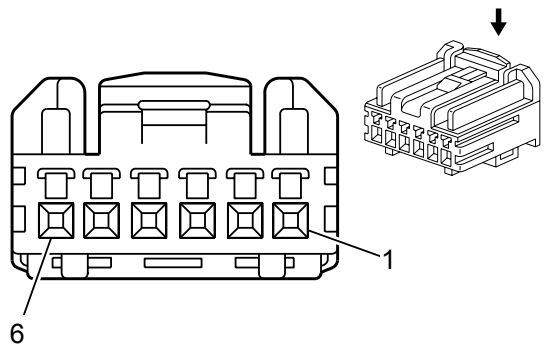


### Connector Part Information

Harness Type:

OEM Connector: HCMPB-C06-K

Service Connector: 19153174

Description: 6 F 0.64 HCM Series (BK)

### *Terminal Part Information*

| Terminal Type ID | Terminated Lead | Diagnostic Test Probe | Terminal Removal Tool | Service Terminal | Tray | Core Crimp | Insulation Crimp |
|---|---|---|---|---|---|---|---|
| I | Not Available | Not Available | Not Available | Not Available | Not Available | Not Available | Not Available |

### *S38 Ignition Switch*

| Pin | Size | Color | Circuit | Function | Terminal Type ID | Option |
|---|---|---|---|---|---|---|
| 1 | - | - | - | Not Occupied | - | - |
| 2 | 0.5 | VT/BK | 3 | Run/Crank Ignition 1 Voltage | I | - |
| 3 | 0.5 | VT/YE | 4 | Accessory Voltage | I | - |
| 4 | 0.5 | RD/D-BU | 540 | Battery Positive Voltage | I | - |
| 5 | 0.5 | WH/VT | 1020 | Off/Run/Crank Voltage | I | - |
| 6 | 0.5 | WH/BK | 1073 | Ignition Key Resistor Signal | I | - |

## S40 Passenger Air Bag Disable Switch

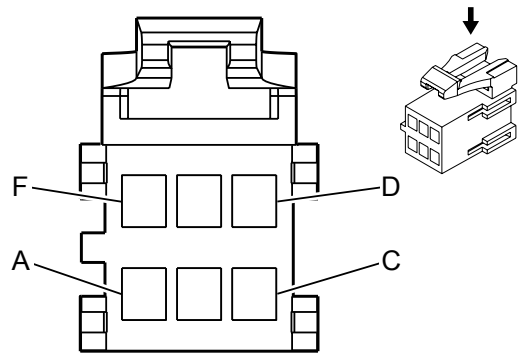


### Connector Part Information

Harness Type: Instrument Panel

OEM Connector: 15305286

Service Connector: 15306014

Description: 6-Way F 150 Metri Pack Series (YE)

### *Terminal Part Information*

| Terminal Type ID | Terminated Lead | Diagnostic Test Probe | Terminal Removal Tool | Service Terminal | Tray | Core Crimp | Insulation Crimp |
|---|---|---|---|---|---|---|---|
| I | 13327107 | J-35616-14 (GN) | J-38125-12A | 12129484 | 19 | E | C |

### *S40 Passenger Air Bag Disable Switch*

| Pin | Size | Color | Circuit | Function | Terminal Type ID | Option |
|---|---|---|---|---|---|---|
| A | 0.35 | D-BU/OG | 7328 | Passenger IP Module Disable Switch Return | I | - |
| B-C | - | - | - | Not Occupied | - | - |
| D | 0.35 | VT/OG | 371 | Passenger IP Module Disable Switch Signal | I | - |
| E-F | - | - | - | Not Occupied | - | - |

## S47D Seat Memory Switch - Driver

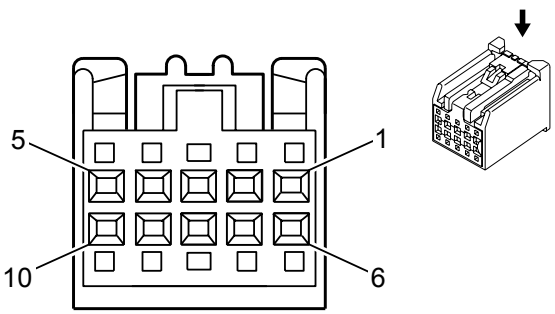


### Connector Part Information

Harness Type: Driver Door Trim

OEM Connector: 13815336

Service Connector: 13577390

Description: 10-Way F 0.64 Kaizen Series (BK)

### *Terminal Part Information*

| Terminal Type ID | Terminated Lead | Diagnostic Test Probe | Terminal Removal Tool | Service Terminal | Tray | Core Crimp | Insulation Crimp |
|---|---|---|---|---|---|---|---|
| I | 13327120 | J-35616-64B (L-BU) | J-38125-215A | SAIT-A03T-M064 | 14 | P | P |

### *S47D Seat Memory Switch - Driver*

| Pin | Size | Color | Circuit | Function | Terminal Type ID | Option |
|---|---|---|---|---|---|---|
| 1 | 0.35 | BK/D-BU | 5978 | Memory Switch Low Reference | I | - |
| 2 | 0.35 | YE | 6817 | LED Backlight Dimming Control | I | - |
| 3-4 | - | - | - | Not Occupied | - | - |
| 5 | 0.35 | D-BU/L-GN | 614 | Memory Seat Switch Set Signal | I | - |
| 6 | 0.35 | WH | 615 | Memory Seat Switch Signal (1) | I | - |
| 7-10 | - | - | - | Not Occupied | - | - |

## S48A Multifunction Switch - Instrument Panel X1

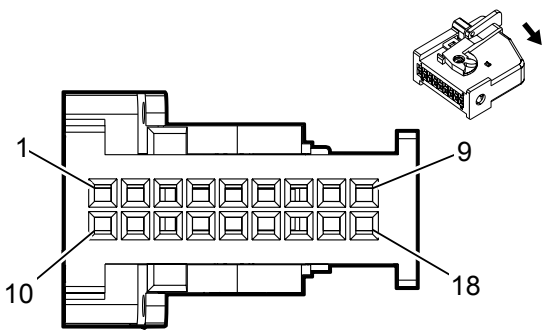


### Connector Part Information

Harness Type: Instrument Panel

OEM Connector: 10820548

Service Connector: Pending

Description: 18-Way F 0.64 Series (BK)

### *Terminal Part Information*

| Terminal Type ID | Terminated Lead | Diagnostic Test Probe | Terminal Removal Tool | Service Terminal | Tray | Core Crimp | Insulation Crimp |
|---|---|---|---|---|---|---|---|
| I | Pending | J-35616-64B (L-BU) | J-38125-12A | 928999-5 | 15 | H | H |
| II | Pending | J-35616-64B (L-BU) | J-38125-12A | 928999-5 | 15 | J | J |

### *S48A Multifunction Switch - Instrument Panel X1*

| Pin | Size | Color | Circuit | Function | Terminal Type ID | Option |
|---|---|---|---|---|---|---|
| 1 | 0.35 | YE | 6817 | LED Backlight Dimming Control | I | - |
| 2 | 0.35 | WH | 6816 | Indicator Dimming Control | I | - |
| 3 | - | - | - | Not Occupied | - | - |
| 4 | 0.35 | D-BU/YE | 6844 | ABS/TCS Hill Descent Control Switch Signal | I | - |
| 5 | 0.35 | WH | 3152 | Lane Departure Warning Indicator Control | I | - |
| 6 | 0.35 | L-GN/BN | 5852 | Rear Park Assist LED Disable Signal | I | - |
| 7 | 0.5 | BN/WH | 1429 | Standing Lamp Relay Control | II | - |
| 8 | 0.35 | GY/WH | 3153 | Lane Departure Warning Disable Switch Signal | I | - |
| 9 | 0.35 | GY/L-GN | 2555 | Rear Park Assist Disable Signal | I | - |
| 10 | 0.5 | D-BU/L-GN | 964 | | II | - |
| 11 | 0.5 | D-BU/L-GN | 963 | | II | - |
| 12 | 0.5 | D-BU/L-GN | 961 | | II | - |
| 13 | 0.5 | D-BU/L-GN | 962 | | II | - |
| 14 | 0.5 | BK | 1850 | Ground | II | - |

| | | | | | | |
|---|---|---|---|---|---|---|
| 15 | 0.35 | WH/GY | 5285 | Adjustable Pedal Switch Rearward Signal | I | - |
| 16 | 0.35 | L-GN/GY | 5286 | Adjustable Pedal Switch Forward Signal | I | - |
| 17 | 0.35 | D-BU/VT | 1788 | Traction Control Switch Signal (1) | I | - |
| 18 | 0.5 | GY | 158 | Cargo Lamp Switch Signal | II | - |

## S48A Multifunction Switch - Instrument Panel X2

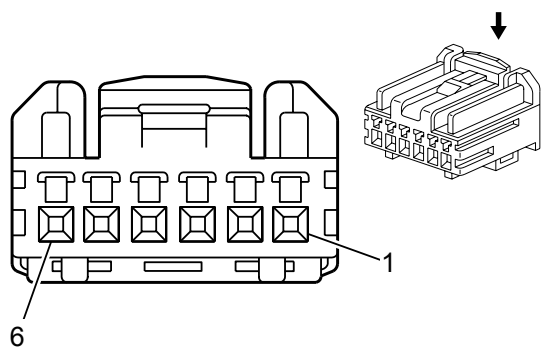


### Connector Part Information

Harness Type: Instrument Panel

OEM Connector: 15488869

Service Connector: 19115655

Description: 6-Way F 0.64 HCM Series (BK)

### *Terminal Part Information*

| Terminal Type ID | Terminated Lead | Diagnostic Test Probe | Terminal Removal Tool | Service Terminal | Tray | Core Crimp | Insulation Crimp |
|---|---|---|---|---|---|---|---|
| I | Pending | J-35616-64B (L-BU) | J-38125-12A | SHCM-A03T-P025 | 20 | J | J |

### *S48A Multifunction Switch - Instrument Panel X2*

| Pin | Size | Color | Circuit | Function | Terminal Type ID | Option |
|---|---|---|---|---|---|---|
| 1 | 0.35 | BN/L-GN | 4311 | Power Take Off Enable In Cab Switch Normally Closed Signal | I | - |
| 2 | 0.35 | L-GN/WH | 488 | Power Take Off Enable Switch | I | - |
| 3 | 0.35 | VT/L-GN | 1739 | Run/Crank Ignition 1 Voltage | I | - |
| 4 | 0.5 | L-GN/YE | 2081 | Exhaust Brake Switch Control | I | - |
| 5 | 0.35 | L-GN/WH | 3438 | Exhaust Brake Switch Signal | I | - |
| 6 | - | - | - | Not Occupied | - | - |

## S52 Outside Rearview Mirror Switch

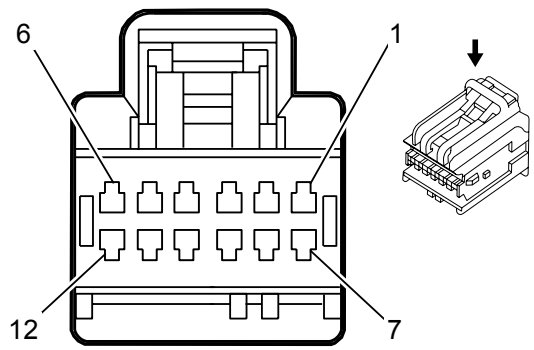


### Connector Part Information

Harness Type: Driver Door Trim

OEM Connector: 13889385

Service Connector: Service by Harness - See Part Catalog

Description: 12-Way F 64 Series, Sealed (BN)

### *Terminal Part Information*

| Terminal Type ID | Terminated Lead | Diagnostic Test Probe | Terminal Removal Tool | Service Terminal | Tray | Core Crimp | Insulation Crimp |
|---|---|---|---|---|---|---|---|
| I | 13587474 | J-35616-64B (L-BU) | J-38125-215A | Not Available | Not Available | P | P |
| II | 13581376 | J-35616-64B (L-BU) | J-38125-215A | SAIT-A03T-M064 | 14 | P | P |

### *S52 Outside Rearview Mirror Switch*

| Pin | Size | Color | Circuit | Function | Terminal Type ID | Option |
|---|---|---|---|---|---|---|
| 1 | 0.35 | GY/BN | 3394 | Driver Mirror Position Sensor Up (+) Down (-) Signal | I | - |
| 2 | 0.35 | VT/RD | 3392 | Driver Mirror Position Sensor High Reference | I | - |
| 3 | 0.75 | BK | 1150 | Ground | II | - |
| 4 | 0.75 | VT/D-BU | 3390 | Driver Mirror Motor Up (+) Down (-) Control | II | - |
| 5 | 0.75 | WH/L-GN | 3412 | Driver Mirror Motor Fold In Control | II | - |
| 6 | 0.75 | YE/BN | 3391 | Driver Mirror Motor Common Control | II | - |
| 7 | 0.35 | WH/YE | 3395 | Driver Mirror Position Sensor Left (-) Right (+) Signal | I | - |
| 8 | 0.35 | BK/BN | 3393 | Driver Mirror Position Sensor Low Reference | I | - |
| 9 | 0.5 | L-GN/WH | 7530 | Linear Interconnect Network Bus 8 | I | - |
| 10 | 0.75 | RD/VT | 1940 | Battery Positive Voltage | II | - |
| 11 | 0.75 | BN/BK | 3389 | Driver Mirror Motor Right (+) Left (-) Control | II | - |
| 12 | 0.75 | GY/WH | 3411 | Driver Mirror Motor Fold Out Control | II | - |

## S52 Outside Rearview Mirror Switch

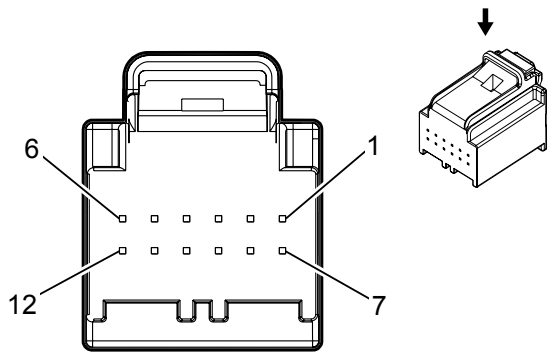


### Connector Part Information

Harness Type: Driver Door Trim

OEM Connector: 13587624

Service Connector: 19151154

Description: 12-Way F 64 Series, Sealed (GY)

### *Terminal Part Information*

| Terminal Type ID | Terminated Lead | Diagnostic Test Probe | Terminal Removal Tool | Service Terminal | Tray | Core Crimp | Insulation Crimp |
|---|---|---|---|---|---|---|---|
| I | Not Available | J-35616-64B (L-BU) | J-38125-215A | Not Available | Not Available | Not Available | Not Available |
| II | 13327120 | J-35616-64B (L-BU) | J-38125-215A | SAIT-A03T-M064 | 14 | P | P |

### *S52 Outside Rearview Mirror Switch*

| Pin | Size | Color | Circuit | Function | Terminal Type ID | Option |
|---|---|---|---|---|---|---|
| 1 | 0.75 | YE/VT | 3397 | Co-Driver Mirror Motor Up (+) Down (-) Control | I | - |
| 2 | 0.75 | WH/L-GN | 3412 | Driver Mirror Motor Fold In Control | I | - |
| 3 | 0.75 | YE/BN | 3391 | Driver Mirror Motor Common Control | I | - |
| 4 | 0.75 | L-GN/BK | 3396 | Co-Driver Mirror Motor Right (+) Left (-) Control | I | - |
| 5 | 0.75 | BK | 1150 | Ground | I | - |
| 6 | 0.35 | YE | 6817 | LED Backlight Dimming Control | II | - |
| 7 | 0.75 | VT/D-BU | 3390 | Driver Mirror Motor Up (+) Down (-) Control | I | - |
| 8 | 0.75 | WH | 3398 | Co-Driver Mirror Motor Common Control | I | - |
| 9 | 0.75 | GY/WH | 3411 | Driver Mirror Motor Fold Out Control | I | - |
| 10 | 0.75 | BN/BK | 3389 | Driver Mirror Motor Right (+) Left (-) Control | I | - |
| 11 | - | - | - | Not Occupied | - | - |
| 12 | 0.75 | RD/VT | 1940 | Battery Positive Voltage | I | - |

## S63 Roof Beacon Switch

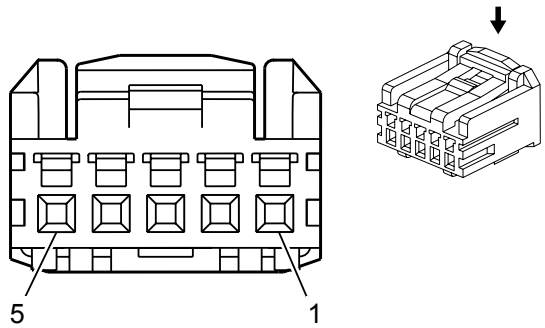


### Connector Part Information

Harness Type: Overhead Console

OEM Connector: 15491277

Service Connector: 88988747

Description: 5-Way F HCM Series (BK)

### *Terminal Part Information*

| Terminal Type ID | Terminated Lead | Diagnostic Test Probe | Terminal Removal Tool | Service Terminal | Tray | Core Crimp | Insulation Crimp |
|---|---|---|---|---|---|---|---|
| I | Pending | J-35616-64B (L-BU) | J-38125-12A | SHCM-A03T-P025 | 20 | J | J |

### *S63 Roof Beacon Switch*

| Pin | Size | Color | Circuit | Function | Terminal Type ID | Option |
|---|---|---|---|---|---|---|
| 1 | 0.35 | BK | 1050 | Ground | I | - |
| 2 | 0.5 | YE | 6817 | LED Backlight Dimming Control | I | - |
| 3 | 0.5 | RD/YE | 240 | Battery Positive Voltage | I | - |
| 4 | 0.5 | WH/BK | 5990 | Emergency Lamp Switch Signal | I | - |
| 5 | - | - | - | Not Occupied | - | - |

## S64D Seat Adjuster Switch - Driver X1

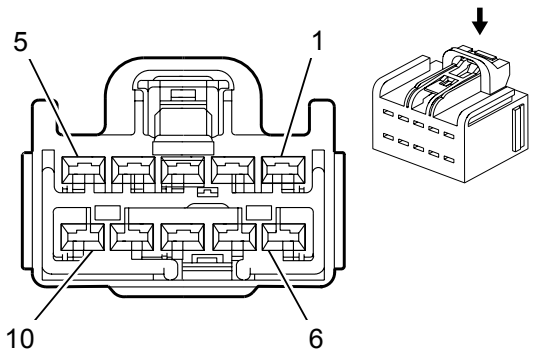


### Connector Part Information

Harness Type: Driver Seat Cushion

OEM Connector: 7283-6457-40

Service Connector: 19167919

Description: 10-Way F Kaizen YESC Series (L-GY)

### *Terminal Part Information*

| Terminal Type ID | Terminated Lead | Diagnostic Test Probe | Terminal Removal Tool | Service Terminal | Tray | Core Crimp | Insulation Crimp |
|---|---|---|---|---|---|---|---|
| I | Not Available | Not Available | Not Available | Not Available | Not Available | Not Available | Not Available |

### *S64D Seat Adjuster Switch - Driver X1*

| Pin | Size | Color | Circuit | Function | Terminal Type ID | Option |
|---|---|---|---|---|---|---|
| 1 | 1.5<br>0.5 | L-GN/BN<br>L-GN/BN | 286<br>1518 | Driver Power Seat Front Vertical Motor Up Control<br>Power Seat Front Vertical Up Switch Signal | I | - |
| 2 | 2.5 | BK | 1150 | Ground | I | - |
| 3 | 1.5<br>0.5 | YE/L-BU<br>YE/BN | 285<br>1522 | Driver Power Seat Horizontal Motor Forward Control<br>Power Seat Horizontal Forward Switch Signal | I | - |
| 4 | 1.5<br>0.5 | L-GN/YE<br>GY/BK | 276<br>1269 | Driver Power Seat Recline Motor Forward Control<br>Power Seat Recline Forward Switch Signal | I | - |
| 5 | 1.5<br>0.5 | L-BU/VT<br>L-BU/VT | 287<br>1520 | Driver Power Seat Front Vertical Motor Down Control<br>Power Seat Front Vertical Down Switch Signal | I | - |
| 6 | 0.35<br>2.5 | BK<br>RD/YE | 1150<br>5040 | Ground<br>Battery Positive Voltage | I | - |
| 7 | 1.5<br>0.5 | GY/L-GN<br>GY/L-GN | 284<br>1523 | Driver Power Seat Horizontal Motor Rearward Control<br>Power Seat Horizontal Rearward Switch Signal | I | - |
| 8 | 1.5<br>0.5 | YE<br>YE | 282<br>1519 | Driver Power Seat Rear Vertical Motor Up Control<br>Power Seat Rear Vertical Up Switch Signal | I | - |
| 9 | 1.5<br>0.5 | L-BU/YE<br>L-GN/GY | 277<br>1270 | Driver Power Seat Recline Motor Rearward Control<br>Power Seat Recline Rearward Switch Signal | I | - |
| 10 | 1.5 | GY/L-BU | 283 | Driver Power Seat Rear Vertical Motor Down Control | I | - |

| | | | | | | |
|---|---|---|---|---|---|---|
| 10 | 1.5 | GY/L-BU | 283 | Driver Power Seat Rear Vertical Motor Down Control | I | - |
| | 0.5 | YE/L-BU | 1521 | Power Seat Rear Vertical Down Switch Signal | | |

## S64D Seat Adjuster Switch - Driver X2

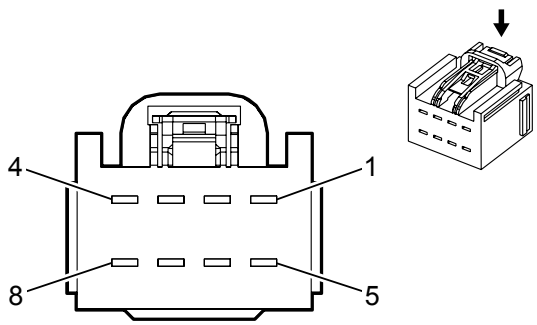


### Connector Part Information

Harness Type: Driver Seat Cushion

OEM Connector: 7283-3243-40

Service Connector: 13581036

Description: 8-Way F 2.8 Series (L-GY)

### *Terminal Part Information*

| Terminal Type ID | Terminated Lead | Diagnostic Test Probe | Terminal Removal Tool | Service Terminal | Tray | Core Crimp | Insulation Crimp |
|---|---|---|---|---|---|---|---|
| I | Not Available | Not Available | Not Available | Not Available | Not Available | Not Available | Not Available |

### *S64D Seat Adjuster Switch - Driver X2*

| Pin | Size | Color | Circuit | Function | Terminal Type ID | Option |
|---|---|---|---|---|---|---|
| 1 | 0.5 | WH | 1066 | Driver Seat Lumbar Up Switch Signal | I | - |
| 2 | 0.5<br>1.5 | YE<br>L-BU | 1065<br>611 | Driver Seat Lumbar Forward Switch Signal<br>Driver Power Seat Lumbar Motor Forward Control | I | - |
| 3-4 | - | - | - | Not Occupied | - | - |
| 5 | 0.5 | YE/BK | 1067 | Driver Seat Lumbar Down Switch Signal | I | - |
| 6 | 1.5<br>0.5 | VT<br>L-BU/VT | 610<br>1064 | Driver Power Seat Lumbar Motor Rearward Control<br>Driver Seat Lumbar Rearward Switch Signal | I | - |
| 7-8 | - | - | - | Not Occupied | - | - |

## S64P Seat Adjuster Switch - Passenger X1

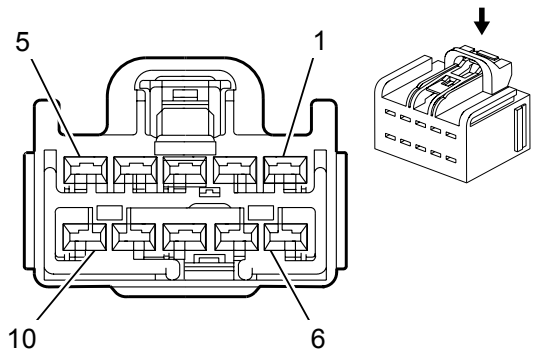


### Connector Part Information

Harness Type: Passenger Seat Cushion

OEM Connector: 7283-6457-40

Service Connector: 19167919

Description: 10-Way F Kaizen YESC Series (L-GY)

### *Terminal Part Information*

| Terminal Type ID | Terminated Lead | Diagnostic Test Probe | Terminal Removal Tool | Service Terminal | Tray | Core Crimp | Insulation Crimp |
|---|---|---|---|---|---|---|---|
| I | Not Available | Not Available | Not Available | Not Available | Not Available | Not Available | Not Available |

### *S64P Seat Adjuster Switch - Passenger X1*

| Pin | Size | Color | Circuit | Function | Terminal Type ID | Option |
|---|---|---|---|---|---|---|
| 1 | 1.5 | L-GN/L-BU | 298 | Passenger Power Seat Front Vertical Motor Down Control | I | - |
| 2 | 1.5 | L-GN | 76 | Passenger Power Seat Recline Motor Forward | I | - |
| 3 | 1.5 | YE/WH | 296 | Passenger Power Seat Horizontal Motor Forward Control | I | - |
| 4 | 1.5 | L-GN/VT | 297 | Passenger Power Seat Front Vertical Motor Up Control | I | - |
| 5 | 2.5 | BK | 1250 | Ground | I | - |
| 6 | 1.5 | L-BU/WH | 289 | Passenger Power Seat Rear Vertical Motor Down Control | I | - |
| 7 | 1.5 | L-BU/BN | 77 | Passenger Power Seat Recline Motor Rearward | I | - |
| 8 | 1.5 | L-GN/WH | 288 | Passenger Power Seat Rear Vertical Motor Up Control | I | - |
| 9 | 1.5 | YE/L-BU | 290 | Passenger Power Seat Horizontal Motor Rearward Control | I | - |
| 10 | 2.5 | RD/BN | 1440 | Battery Positive Voltage | I | - |

## S64P Seat Adjuster Switch - Passenger X2

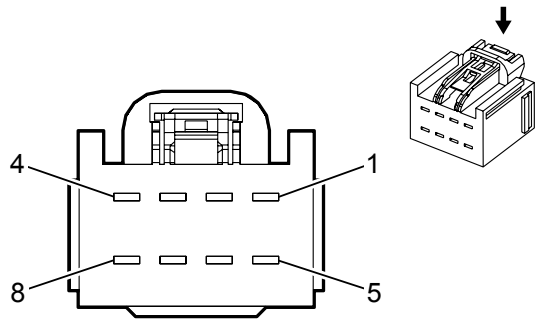


### Connector Part Information

Harness Type: Passenger Seat Cushion

OEM Connector: 7283-3243-40

Service Connector: 13581036

Description: 8-Way F 2.8 Series (L-GY)

### *Terminal Part Information*

| Terminal Type ID | Terminated Lead | Diagnostic Test Probe | Terminal Removal Tool | Service Terminal | Tray | Core Crimp | Insulation Crimp |
|---|---|---|---|---|---|---|---|
| I | Not Available | Not Available | Not Available | Not Available | Not Available | Not Available | Not Available |

### *S64P Seat Adjuster Switch - Passenger X2*

| Pin | Size | Color | Circuit | Function | Terminal Type ID | Option |
|---|---|---|---|---|---|---|
| 1-2 | - | - | - | Not Occupied | - | - |
| 3 | 1.5 | VT | 210 | Passenger Power Seat Lumbar Motor Rearward Control | I | - |
| 4 | 1.5 | BN/YE | 793 | Passenger Power Seat Lumbar Motor Up Control | I | - |
| 5 | - | - | - | Not Occupied | - | - |
| 6 | 1.5 | L-BU | 211 | Passenger Power Seat Lumbar Motor Forward Control | I | - |
| 7 | - | - | - | Not Occupied | - | - |
| 8 | 1.5 | L-BU/YE | 792 | Passenger Power Seat Lumbar Motor Down Control | I | - |

## S68 Sliding Rear Window Switch

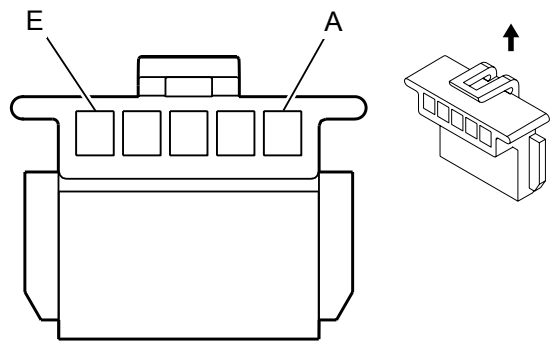


### Connector Part Information

Harness Type: Overhead Console

OEM Connector: 12124997

Service Connector: 12167130

Description: 5-Way F 150 Metri Pack Series (BK)

### *Terminal Part Information*

| Terminal Type ID | Terminated Lead | Diagnostic Test Probe | Terminal Removal Tool | Service Terminal | Tray | Core Crimp | Insulation Crimp |
|---|---|---|---|---|---|---|---|
| I | Pending | J-35616-14 (GN) | J-38125-12A | 12103359 | 18 | E | C |

### *S68 Sliding Rear Window Switch*

| Pin | Size | Color | Circuit | Function | Terminal Type ID | Option |
|---|---|---|---|---|---|---|
| A | 0.35 | VT/YE | 43 | Accessory Voltage | I | - |
| B | 0.35 | WH | 6192 | Power Sliding Window Switch Close Signal | I | - |
| C | 0.35 | YE/VT | 6191 | Power Sliding Window Switch Open Signal | I | - |
| D | 0.5 | BK | 1050 | Ground | I | - |
| E | 0.35 | YE | 6817 | LED Backlight Dimming Control | I | - |

## S70F Steering Wheel Controls Switch - Radio Volume

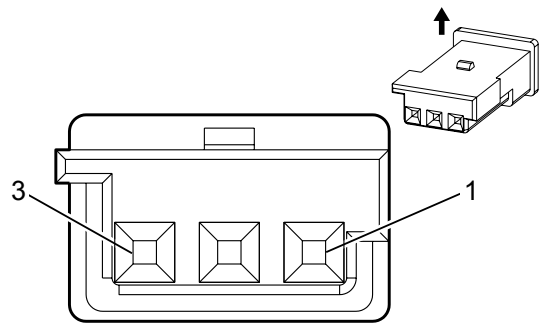


### Connector Part Information

Harness Type:

OEM Connector:

Service Connector: 13576530

Description: 3 F Micro Quadlock Series (PU)

### *Terminal Part Information*

| Terminal Type ID | Terminated Lead | Diagnostic Test Probe | Terminal Removal Tool | Service Terminal | Tray | Core Crimp | Insulation Crimp |
|---|---|---|---|---|---|---|---|
| I | Not Available | Not Available | Not Available | Not Available | Not Available | Not Available | Not Available |

### *S70F Steering Wheel Controls Switch - Radio Volume*

| Pin | Size | Color | Circuit | Function | Terminal Type ID | Option |
|---|---|---|---|---|---|---|
| 1 | 0.5 | BU | 4315 | Radio Volume Up Signal | I | - |
| 2 | 0.5 | GN/BN | 4314 | Radio Volume Down Signal | I | - |
| 3 | 0.5 | BK | 1550 | Ground | I | - |

## S72 Sunroof Switch

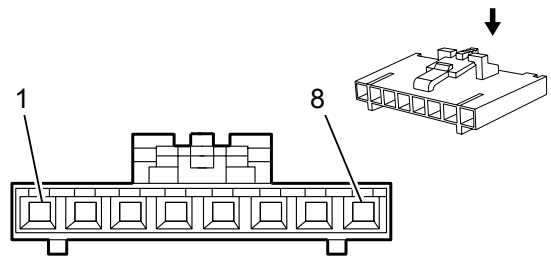


### Connector Part Information

Harness Type: Overhead Console

OEM Connector: 12103492

Service Connector: 89046705

Description: 8-Way F 0.64 SL Series (BK)

### *Terminal Part Information*

| Terminal Type ID | Terminated Lead | Diagnostic Test Probe | Terminal Removal Tool | Service Terminal | Tray | Core Crimp | Insulation Crimp |
|---|---|---|---|---|---|---|---|
| I | Pending | J-35616-64B (L-BU) | J-38125-213 | 16-02-1110 | 20 | H | H |

### *S72 Sunroof Switch*

| Pin | Size | Color | Circuit | Function | Terminal Type ID | Option |
|---|---|---|---|---|---|---|
| 1 | 0.35 | BN/D-BU | 2074 | Sunroof Switch Express Signal | I | - |
| 2 | 0.35 | YE/VT | 144 | Sunroof Switch Open Vent Signal | I | - |
| 3 | 0.35 | YE | 6817 | LED Backlight Dimming Control | I | - |
| 4 | 0.35 | D-BU/WH | 110 | Sunroof Switch Close Signal | I | - |
| 5 | - | - | - | Not Occupied | - | - |
| 6 | 0.35 | L-GN/WH | 100 | Sunroof Switch Open Signal | I | - |
| 7 | 0.35 | BK | 1050 | Ground | I | - |
| 8 | 0.35 | GY/VT | 2075 | Sunroof Switch Close Vent Signal | I | - |

## S76 Trailer Brake Control Switch

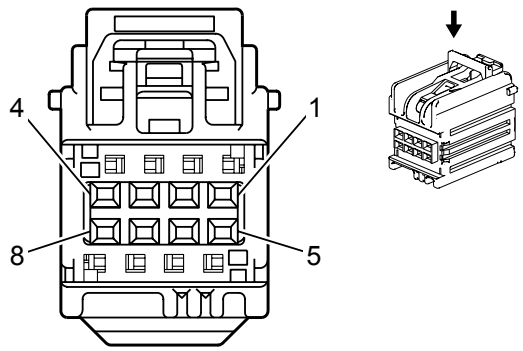


### Connector Part Information

Harness Type: Instrument Panel

OEM Connector: 13518475

Service Connector: 13576542

Description: 8-Way F YESC Kaizen Series (BK)

### *Terminal Part Information*

| Terminal Type ID | Terminated Lead | Diagnostic Test Probe | Terminal Removal Tool | Service Terminal | Tray | Core Crimp | Insulation Crimp |
|---|---|---|---|---|---|---|---|
| I | 13327120 | J-35616-64B (L-BU) | J-38125-215A | SAIT-A03T-M064 | 14 | P | P |
| II | Pending | J-35616-64B (L-BU) | J-38125-215A | Not Available | Not Available | Not Available | Not Available |

### *S76 Trailer Brake Control Switch*

| Pin | Size | Color | Circuit | Function | Terminal Type ID | Option |
|---|---|---|---|---|---|---|
| 1-2 | - | - | - | Not Occupied | - | - |
| 3 | 0.5 | D-BU/RD | 7632 | Integrated Trailer Brake Controller Switch 5 Volt Reference | I | - |
| 4 | 0.5 | YE | 7635 | Integrated Trailer Brake Controller Manual Apply Signal | I | - |
| 5 | 0.5 | BN | 7634 | Integrated Trailer Brake Contoller Redundant Manual Apply Signal | I | - |
| 6 | 0.5 | L-GN/BK | 7633 | Integrated Trailer Brake Controller User Gain Signal | I | - |
| 7 | 0.35 | YE | 6817 | LED Backlight Dimming Control | II | - |
| 8 | 0.5 | BK/BN | 7631 | Integrated Trailer Brake Controller Switch Low Reference | I | - |

## S77 Transfer Case Shift Control Switch

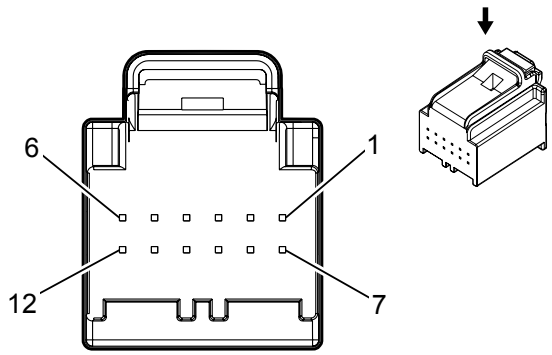


### Connector Part Information

Harness Type: Instrument Panel

OEM Connector: 13587624

Service Connector: 19151154

Description: 12-Way F 64 Series, Sealed (GY)

### *Terminal Part Information*

| Terminal Type ID | Terminated Lead | Diagnostic Test Probe | Terminal Removal Tool | Service Terminal | Tray | Core Crimp | Insulation Crimp |
|---|---|---|---|---|---|---|---|
| I | 13327120 | J-35616-64B (L-BU) | J-38125-215A | SAIT-A03T-M064 | 14 | P | P |

### *S77 Transfer Case Shift Control Switch*

| Pin | Size | Color | Circuit | Function | Terminal Type ID | Option |
|---|---|---|---|---|---|---|
| 1 | - | - | - | Not Occupied | - | - |
| 2 | 0.5 | VT/BN | 300 | Run Ignition 3 Voltage | I | - |
| 3 | 0.35 | BN | 1560 | Neutral Indicator Control | I | - |
| 4 | 0.35 | WH | 6816 | Indicator Dimming Control | I | - |
| 5 | 0.35 | YE | 6817 | LED Backlight Dimming Control | I | - |
| 6 | 0.5 | BK | 1050 | Ground | I | - |
| 7 | 0.35 | GY/L-GN | 1561 | AWD Indicator Control | I | - |
| 8 | 0.35 | L-GN/BK | 1563 | 2 HI Indicator Control | I | - |
| 9 | 0.35 | BN/BK | 1566 | 4 HI Indicator Control | I | - |
| 10 | 0.35 | VT/WH | 1565 | 4 LO Indicator Control | I | - |
| 11 | 0.35 | GY/RD | 6029 | Four Wheel Drive Mode Switch 5 Volt Reference | I | - |
| 12 | 0.35 | D-BU/YE | 1693 | Four Wheel Drive Switch Signal | I | - |

## S77 Transfer Case Shift Control Switch

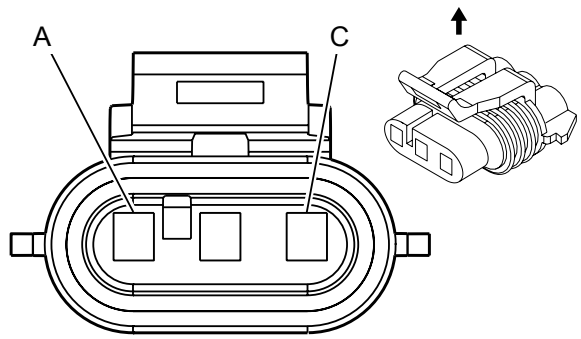


### Connector Part Information

Harness Type: Engine

OEM Connector: 12059595

Service Connector: 13585316

Description: 3-Way F 150 Metri Pack Series, Sealed (BK)

### *Terminal Part Information*

| Terminal Type ID | Terminated Lead | Diagnostic Test Probe | Terminal Removal Tool | Service Terminal | Tray | Core Crimp | Insulation Crimp |
|---|---|---|---|---|---|---|---|
| I | 13575427 | J-35616-14 (GN) | J-38125-12A | 12048074 | 2 | 2 | 1 |
| II | 13575427 | J-35616-14 (GN) | J-38125-12A | 12048074 | 2 | E | 1 |
| III | 13588112 | J-35616-14 (GN) | J-38125-12A | 12048074 | 2 | E | 1 |

### *S77 Transfer Case Shift Control Switch*

| Pin | Size | Color | Circuit | Function | Terminal Type ID | Option |
|---|---|---|---|---|---|---|
| A | 1 | BK | 550 | Ground | I | - |
| B | 0.5 | GY/BK | 1694 | Four Wheel Drive Low Signal | II | - |
| C | 0.5 | GY/BK | 1570 | Front Axle Actuator Control | II | - |

## S78 Turn Signal Multifunction Switch X1

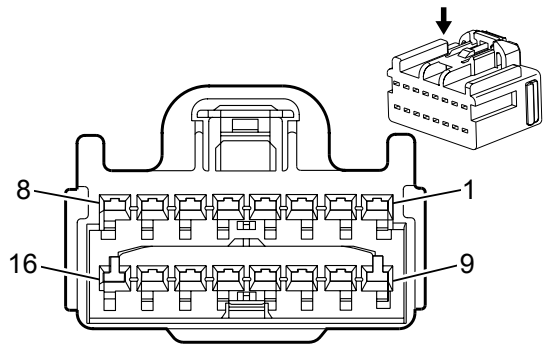


### Connector Part Information

Harness Type:

OEM Connector: 7283-6453-60

Service Connector: 89047090

Description: 16 F Kaizen YESC Series (GN)

### *Terminal Part Information*

| Terminal Type ID | Terminated Lead | Diagnostic Test Probe | Terminal Removal Tool | Service Terminal | Tray | Core Crimp | Insulation Crimp |
|---|---|---|---|---|---|---|---|
| I | Not Available | Not Available | Not Available | Not Available | Not Available | Not Available | Not Available |

### *S78 Turn Signal Multifunction Switch X1*

| Pin | Size | Color | Circuit | Function | Terminal Type ID | Option |
|---|---|---|---|---|---|---|
| 1-3 | - | - | - | Not Occupied | - | - |
| 4 | 0.5 | GY | 1715 | Windshield Wiper Switch High Signal | I | - |
| 5 | - | - | - | Not Occupied | - | - |
| 6 | 0.5 | WH/BK | 94 | Windshield Washer Switch Signal | I | - |
| 7 | 0.5 | BK/GY | 6009 | Low Reference | I | - |
| 8 | 0.5 | YE/BU | 1714 | Windshield Wiper Switch Low Signal | I | - |
| 9 | - | - | - | Not Occupied | - | - |
| 10 | 0.5 | YE/BN | 307 | Headlamp Switch Flash To Pass Signal | I | - |
| 11-12 | - | - | - | Not Occupied | - | - |
| 13 | 0.5 | BK/WH | 1851 | Signal Ground | I | - |
| 14 | 0.5 | WH | 524 | Headlamp Dimmer Switch High Beam Signal | I | - |
| 15-16 | - | - | - | Not Occupied | - | - |

## S78 Turn Signal Multifunction Switch X2

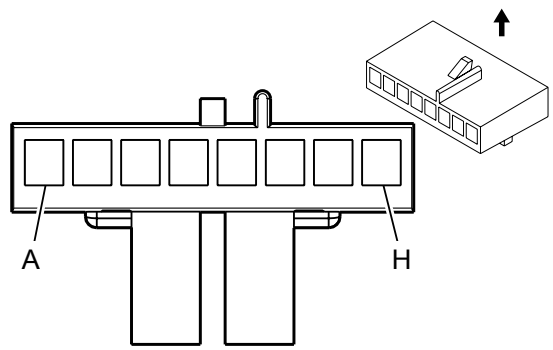


### Connector Part Information

Harness Type:

OEM Connector: 15466859

Service Connector: Service by Harness - See Part Catalog

Description: 8 F 150 Metri Pack Series (L-GY)

### *Terminal Part Information*

| Terminal Type ID | Terminated Lead | Diagnostic Test Probe | Terminal Removal Tool | Service Terminal | Tray | Core Crimp | Insulation Crimp |
|---|---|---|---|---|---|---|---|
| I | Not Available | Not Available | Not Available | Not Available | Not Available | Not Available | Not Available |

### *S78 Turn Signal Multifunction Switch X2*

| Pin | Size | Color | Circuit | Function | Terminal Type ID | Option |
|---|---|---|---|---|---|---|
| A-B | - | - | - | Not Occupied | - | - |
| C | 0.5 | BK/WH | 1851 | Signal Ground | I | - |
| D | 0.5 | VT/BU | 664 | Hazard Switch Right Turn Signal | I | - |
| E | 0.5 | WH/GN | 663 | Hazard Switch Left Turn Signal | I | - |
| F | 0.5 | BK/WH | 1851 | Signal Ground | I | - |
| G | 0.5 | GN/WH | 111 | Hazard Switch Signal | I | - |
| H | - | - | - | Not Occupied | - | - |

## S79D Window Switch - Driver

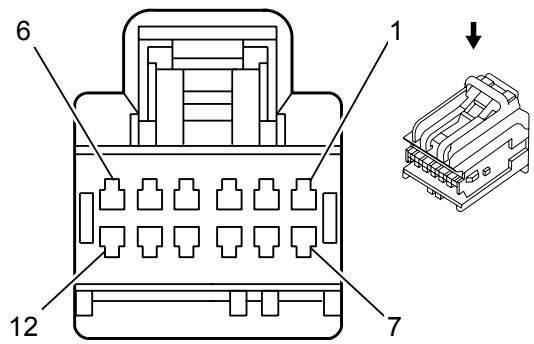


### Connector Part Information

Harness Type: Driver Door Trim

OEM Connector: 13551678

Service Connector: 89047364

Description: 12-Way F 0.64 Series (BK)

### *Terminal Part Information*

| Terminal Type ID | Terminated Lead | Diagnostic Test Probe | Terminal Removal Tool | Service Terminal | Tray | Core Crimp | Insulation Crimp |
|---|---|---|---|---|---|---|---|
| I | Pending | J-35616-64B (L-BU) | J-38125-215A | Not Available | Not Available | Not Available | Not Available |
| II | 13327120 | J-35616-64B (L-BU) | J-38125-215A | SAIT-A03T-M064 | 14 | P | P |

### *S79D Window Switch - Driver*

| Pin | Size | Color | Circuit | Function | Terminal Type ID | Option |
|---|---|---|---|---|---|---|
| 1 | 0.75 | BK | 1150 | Ground | I | - |
| 2 | 0.35 | L-GN/VT | 7628 | Power Window Motor Left Front Express Control | II | - |
| 3 | 0.35 | GY | 1136 | Power Window Master Switch Left Front Down Signal | II | - |
| 4 | 0.5 | RD/VT | 1940 | Battery Positive Voltage | II | - |
| 5 | 0.5 | L-GN/YE | 6134 | Linear Interconnect Network Bus 3 | II | - |
| 6 | 0.35 | L-GN/WH | 1300 | Power Window Master Switch Left Front Up Signal | II | - |
| 7 | 0.35 | WH/VT | 3270 | Driver Door Lock Motor Status | II | - |
| 8 | 0.35 | D-BU/VT | 1124 | Door Lock Key Switch Unlock Signal | II | - |
| 9 | - | - | - | Not Occupied | - | - |
| 10 | 0.35 | YE/BN | 3265 | Child Security Lock Switch Signal | II | - |
| 11 | 0.35 | WH | 6816 | Indicator Dimming Control | II | - |
| 12 | 0.35 | GY | 5697 | Child Lockout Indicator | II | - |

## S79LR Window Switch - Left Rear

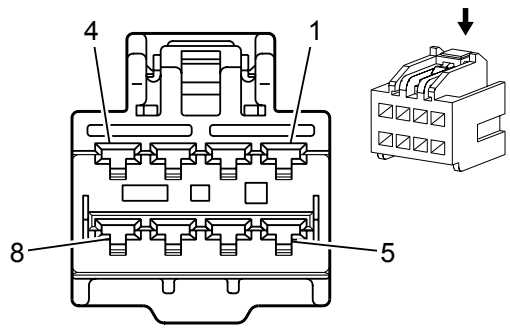


### Connector Part Information

Harness Type: Left Rear Door

OEM Connector: 15491286

Service Connector: 13580111

Description: 8-Way F 2.8 Series (BK)

### *Terminal Part Information*

| Terminal Type ID | Terminated Lead | Diagnostic Test Probe | Terminal Removal Tool | Service Terminal | Tray | Core Crimp | Insulation Crimp |
|---|---|---|---|---|---|---|---|
| I | Pending | J-35616-35 (VT) | J-38125-553 | 8100-4443 | 22 | E | A |
| II | Pending | J-35616-35 (VT) | J-38125-553 | 8100-4445 | 22 | F | D |

### *S79LR Window Switch - Left Rear*

| Pin | Size | Color | Circuit | Function | Terminal Type ID | Option |
|---|---|---|---|---|---|---|
| 1 | 0.5 | L-GN/GY | 6135 | Linear Interconnect Network Bus 4 | I | - |
| 2 | 0.35 | GY/WH | 747 | Left Rear Door Ajar Switch Signal | I | - |
| 3 | 0.5 | BK | 1150 | Ground | I | - |
| 4 | - | - | - | Not Occupied | - | - |
| 5 | 2.5 | BK | 1150 | Ground | II | - |
| 6 | 2.5 | D-BU/VT | 668 | Power Window Motor Left Rear Up Control | II | - |
| 7 | 2.5 | YE/D-BU | 669 | Power Window Motor Left Rear Down Control | II | - |
| 8 | 2.5 | RD/D-BU | 1842 | Battery Positive Voltage | II | - |

## S79P Window Switch - Passenger

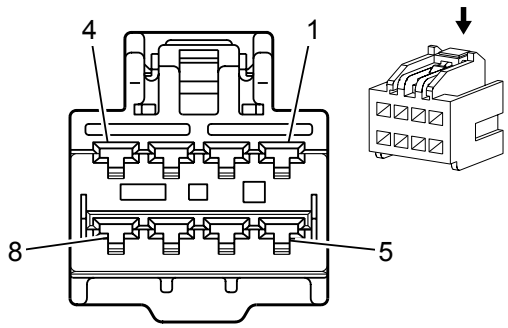


### Connector Part Information

Harness Type: Passenger Door Trim

OEM Connector: 15491286

Service Connector: 13580111

Description: 8-Way F 2.8 Series (BK)

### *Terminal Part Information*

| Terminal Type ID | Terminated Lead | Diagnostic Test Probe | Terminal Removal Tool | Service Terminal | Tray | Core Crimp | Insulation Crimp |
|---|---|---|---|---|---|---|---|
| I | Pending | J-35616-35 (VT) | J-38125-553 | 8100-4445 | 22 | F | D |
| II | Pending | J-35616-35 (VT) | J-38125-553 | 8100-4443 | 22 | E | A |

### *S79P Window Switch - Passenger*

| Pin | Size | Color | Circuit | Function | Terminal Type ID | Option |
|---|---|---|---|---|---|---|
| 1 | 2.5 | BK | 1250 | Ground | I | - |
| 2 | 2.5 | L-GN/GY | 3387 | Power Window Motor Co-Driver Up Control | I | - |
| 3 | 2.5 | YE/D-BU | 3388 | Power Window Motor Co-Driver Down Control | I | - |
| 4 | 2.5 | RD/WH | 1340 | Battery Positive Voltage | I | - |
| 5 | 0.5 | L-GN/YE | 6134 | Linear Interconnect Network Bus 3 | II | - |
| 6-7 | - | - | - | Not Occupied | - | - |
| 8 | 0.35 | GY | 746 | Right Front Door Ajar Switch Signal | II | - |

## S79P Window Switch - Passenger X1

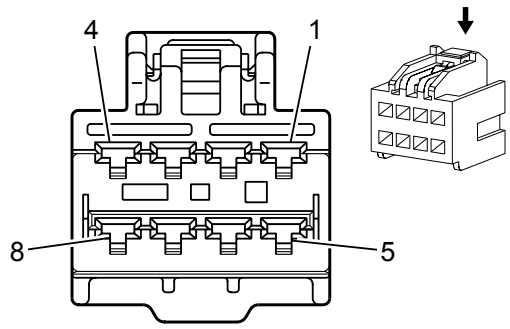


### Connector Part Information

Harness Type: Passenger Door Trim

OEM Connector: 15491286

Service Connector: 13580111

Description: 8-Way F 2.8 Series (BK)

### *Terminal Part Information*

| Terminal Type ID | Terminated Lead | Diagnostic Test Probe | Terminal Removal Tool | Service Terminal | Tray | Core Crimp | Insulation Crimp |
|---|---|---|---|---|---|---|---|
| I | Not Available | J-35616-35 (VT) | J-38125-553 | 8100-4445 | 22 | F | D |
| II | Not Available | J-35616-35 (VT) | J-38125-553 | 8100-4443 | 22 | E | A |

### *S79P Window Switch - Passenger X1*

| Pin | Size | Color | Circuit | Function | Terminal Type ID | Option |
|---|---|---|---|---|---|---|
| 1 | 2.5 | BK | 1250 | Ground | I | - |
| 2 | 2.5 | L-GN/GY | 3387 | Power Window Motor Co-Driver Up Control | I | - |
| 3 | 2.5 | YE/D-BU | 3388 | Power Window Motor Co-Driver Down Control | I | - |
| 4 | 2.5 | RD/WH | 1340 | Battery Positive Voltage | I | - |
| 5 | 0.5 | L-GN/YE | 6134 | Linear Interconnect Network Bus 3 | II | - |
| 6-7 | - | - | - | Not Occupied | - | - |
| 8 | 0.35 | GY | 746 | Right Front Door Ajar Switch Signal | II | - |

## S79P Window Switch - Passenger X2

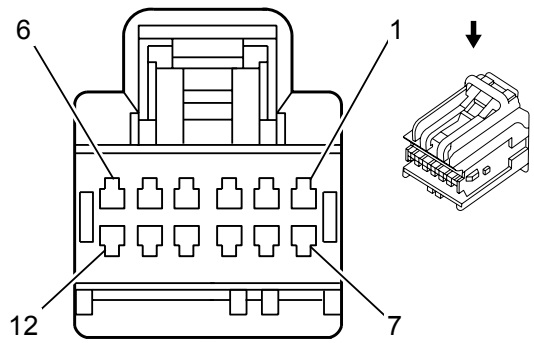


### Connector Part Information

Harness Type: Passenger Door Trim

OEM Connector: 13551678

Service Connector: 89047364

Description: 12-Way F 0.64 Series (BK)

### *Terminal Part Information*

| Terminal Type ID | Terminated Lead | Diagnostic Test Probe | Terminal Removal Tool | Service Terminal | Tray | Core Crimp | Insulation Crimp |
|---|---|---|---|---|---|---|---|
| I | Not Available | J-35616-64B (L-BU) | J-38125-215A | Not Available | Not Available | Not Available | Not Available |
| II | 13327120 | J-35616-64B (L-BU) | J-38125-215A | SAIT-A03T-M064 | 14 | P | P |

### *S79P Window Switch - Passenger X2*

| Pin | Size | Color | Circuit | Function | Terminal Type ID | Option |
|---|---|---|---|---|---|---|
| 1 | 0.75 | YE/WH | 3413 | Co-Driver Mirror Motor Fold Out Control | I | - |
| 2 | 0.75 | YE/VT | 3397 | Co-Driver Mirror Motor Up (+) Down (-) Control | I | - |
| 3 | 0.75 | WH | 3398 | Co-Driver Mirror Motor Common Control | I | - |
| 4 | 0.35 | YE/RD | 3399 | Co-Driver Mirror Position Sensor High Reference | II | - |
| 5 | 0.35 | D-BU/YE | 3401 | Co-Driver Mirror Position Sensor Up (+) Down (-) Signal | II | - |
| 6 | 0.35 | BK/L-GN | 3400 | Co-Driver Mirror Position Sensor Low Reference | II | - |
| 7 | 0.75 | D-BU/GY | 3414 | Co-Driver Mirror Motor Fold In Control | I | - |
| 8 | 0.75 | L-GN/BK | 3396 | Co-Driver Mirror Motor Right (+) Left (-) Control | I | - |
| 9 | 0.5 | L-GN/WH | 7530 | Linear Interconnect Network Bus 8 | II | - |
| 10 | - | - | - | Not Occupied | - | - |
| 11 | 0.35 | VT/WH | 3403 | Co-Driver Mirror Position Sensor Left (-) Right (+) Signal | II | - |
| 12 | - | - | - | Not Occupied | - | - |

## S79RR Window Switch - Right Rear

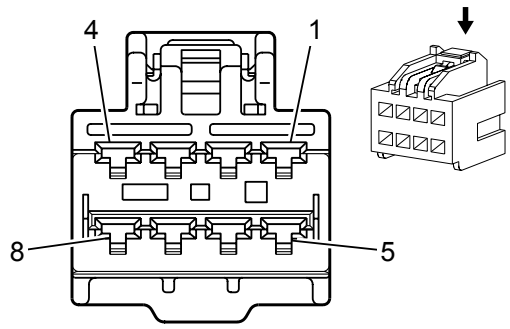


### Connector Part Information

Harness Type: Right Rear Door

OEM Connector: 15491286

Service Connector: 13580111

Description: 8-Way F 2.8 Series (BK)

### *Terminal Part Information*

| Terminal Type ID | Terminated Lead | Diagnostic Test Probe | Terminal Removal Tool | Service Terminal | Tray | Core Crimp | Insulation Crimp |
|---|---|---|---|---|---|---|---|
| I | Pending | J-35616-35 (VT) | J-38125-553 | 8100-4443 | 22 | E | A |
| II | Pending | J-35616-35 (VT) | J-38125-553 | 8100-4445 | 22 | F | D |

### *S79RR Window Switch - Right Rear*

| Pin | Size | Color | Circuit | Function | Terminal Type ID | Option |
|---|---|---|---|---|---|---|
| 1 | 0.5 | L-GN/GY | 6135 | Linear Interconnect Network Bus 4 | I | - |
| 2 | 0.35 | GY/WH | 748 | Right Rear Door Ajar Switch Signal | I | - |
| 3-4 | - | - | - | Not Occupied | - | - |
| 5 | 2.5 | BK | 1250 | Ground | II | - |
| 6 | 2.5 | D-BU/GY | 670 | Power Window Motor Right Rear Up Control | II | - |
| 7 | 2.5 | L-GN/BK | 671 | Power Window Motor Right Rear Down Control | II | - |
| 8 | 2.5 | RD/WH | 1340 | Battery Positive Voltage | II | - |

## S135 Rollover Protection Disable Switch

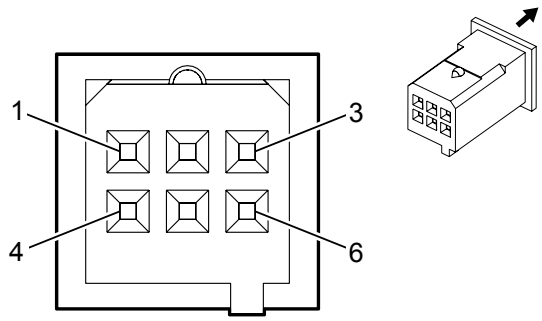


### Connector Part Information

Harness Type: Instrument Panel

OEM Connector: 13548426

Service Connector: 13225892

Description: 6-Way F 0.64 Micro Quadlock Series (NA)

### *Terminal Part Information*

| Terminal Type ID | Terminated Lead | Diagnostic Test Probe | Terminal Removal Tool | Service Terminal | Tray | Core Crimp | Insulation Crimp |
|---|---|---|---|---|---|---|---|
| I | Pending | J-35616-65B (L-BU) | J-38125-553 | Not Available | Not Available | Not Available | Not Available |

### *S135 Rollover Protection Disable Switch*

| Pin | Size | Color | Circuit | Function | Terminal Type ID | Option |
|---|---|---|---|---|---|---|
| 1 | 0.35 | VT/OG | 371 | Passenger IP Module Disable Switch Signal | I | - |
| 2 | 0.35 | D-BU/OG | 7328 | Passenger IP Module Disable Switch Return | I | - |
| 3-6 | - | - | - | Not Occupied | - | - |

## T1 Accessory DC/AC Power Inverter Module

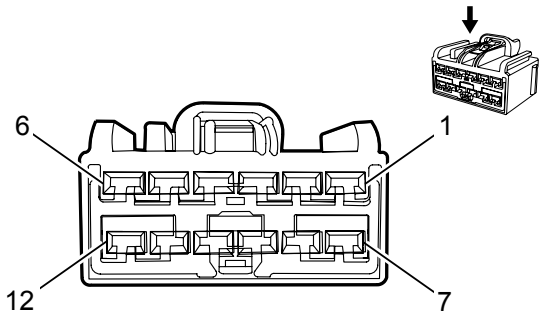


### Connector Part Information

Harness Type: Instrument Panel

OEM Connector: 10846814

Service Connector: 13580444

Description: 12-Way F 2.8 Kaizen Series (L-GY)

### *Terminal Part Information*

| Terminal Type ID | Terminated Lead | Diagnostic Test Probe | Terminal Removal Tool | Service Terminal | Tray | Core Crimp | Insulation Crimp |
|---|---|---|---|---|---|---|---|
| I | Pending | J-35616-35 (VT) | J-38125-11A | 7116-4112-02 | 9 | Not Available | Not Available |
| II | Pending | J-35616-35 (VT) | J-38125-11A | 7116-4112-02 | 9 | C | D |
| III | Pending | J-35616-35 (VT) | J-38125-12A | 1326030-6 | 17 | E | C |

### *T1 Accessory DC/AC Power Inverter Module*

| Pin | Size | Color | Circuit | Function | Terminal Type ID | Option |
|---|---|---|---|---|---|---|
| 1 | - | - | - | Not Occupied | - | - |
| 2 | 1.5 | BK | 5683 | 120 VAC Phase A | I | - |
| 3-5 | - | - | - | Not Occupied | - | - |
| 6 | 2.5 | RD/GY | 4140 | Battery Positive Voltage | II | - |
| 7 | 1.5 | RD | 5684 | 120 VAC Phase B | I | - |
| 8-9 | - | - | - | Not Occupied | - | - |
| 10 | 0.5 | BARE | 514 | Drain Wire | I | - |
| 11 | 2.5 | BK | 1050 | Ground | II | - |
| 12 | 0.35 | D-BU/BN | 6807 | DC To AC Inverter Control | III | - |

## T3 Audio Amplifier X1

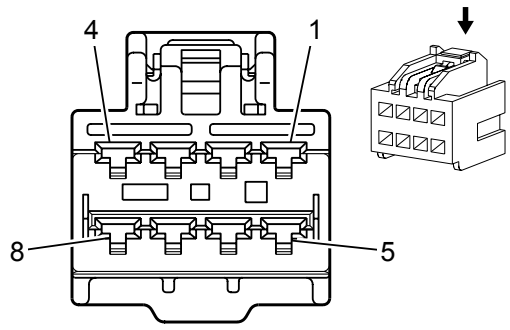


### Connector Part Information

Harness Type: Body

OEM Connector: 15491286

Service Connector: 13580111

Description: 8-Way F 2.8 Series (BK)

### *Terminal Part Information*

| Terminal Type ID | Terminated Lead | Diagnostic Test Probe | Terminal Removal Tool | Service Terminal | Tray | Core Crimp | Insulation Crimp |
|---|---|---|---|---|---|---|---|
| I | Pending | J-35616-35 (VT) | J-38125-553 | 8100-4445 | 22 | F | D |
| II | Pending | J-35616-35 (VT) | J-38125-553 | 8100-4444 | 22 | 2 | A |

### *T3 Audio Amplifier X1*

| Pin | Size | Color | Circuit | Function | Terminal Type ID | Option |
|---|---|---|---|---|---|---|
| 1 | 2.5 | D-BU/GY | 346 | Left/Rear Subwoofer Speaker (+) | I | - |
| 2 | 1 | YE | 200 | Right Front Speaker (+) (1) | II | - |
| 3 | 1 | D-BU | 201 | Left Front Speaker (+) (1) | II | - |
| 4 | 2.5 | RD/YE | 3740 | Battery Positive Voltage | I | - |
| 5 | 2.5 | GY/BK | 315 | Right Subwoofer Speaker (-) | I | - |
| 6 | 1 | YE/BK | 117 | Right Front Speaker Signal (-) (1) | II | - |
| 7 | 1 | BN/D-BU | 118 | Left Front Speaker Signal (-) (1) | II | - |
| 8 | 2.5 | BK | 2550 | Ground | I | - |

## T3 Audio Amplifier X1

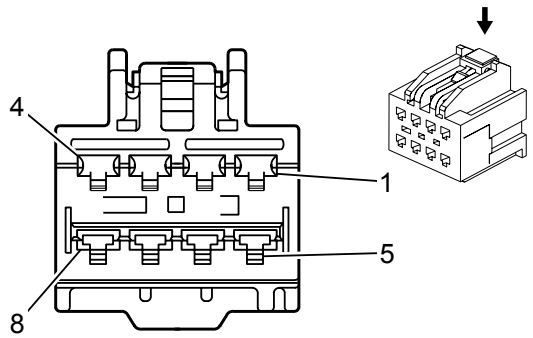


### Connector Part Information

Harness Type: Body

OEM Connector: 15491289

Service Connector: 19115652

Description: 8-Way F 2.8 Series (L-GY)

### *Terminal Part Information*

| Terminal Type ID | Terminated Lead | Diagnostic Test Probe | Terminal Removal Tool | Service Terminal | Tray | Core Crimp | Insulation Crimp |
|---|---|---|---|---|---|---|---|
| I | Not Available | J-35616-35 (VT) | J-38125-553 | 8100-4445 | 22 | F | D |

### *T3 Audio Amplifier X1*

| Pin | Size | Color | Circuit | Function | Terminal Type ID | Option |
|---|---|---|---|---|---|---|
| 1 | 2.5 | YE | 200 | Right Front Speaker (+) (1) | I | - |
| 2 | - | - | - | Not Occupied | - | - |
| 3 | 2.5 | D-BU | 201 | Left Front Speaker (+) (1) | I | - |
| 4 | 2.5 | RD/YE | 3740 | Battery Positive Voltage | I | - |
| 5 | 2.5 | YE/BK | 117 | Right Front Speaker Signal (-) (1) | I | - |
| 6 | - | - | - | Not Occupied | - | - |
| 7 | 2.5 | BN/D-BU | 118 | Left Front Speaker Signal (-) (1) | I | - |
| 8 | 2.5 | BK | 2550 | Ground | I | - |

## T3 Audio Amplifier X2

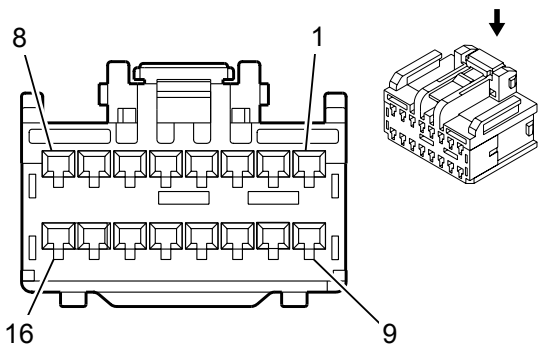


### Connector Part Information

Harness Type: Body

OEM Connector: 15489823

Service Connector: 15134091

Description: 16-Way F 1.5 Series (BK)

### *Terminal Part Information*

| Terminal Type ID | Terminated Lead | Diagnostic Test Probe | Terminal Removal Tool | Service Terminal | Tray | Core Crimp | Insulation Crimp |
|---|---|---|---|---|---|---|---|
| I | Pending | J-35616-2A (GY) | J-38125-553 | 15496302 | 5 | 2 | A |

### *T3 Audio Amplifier X2*

| Pin | Size | Color | Circuit | Function | Terminal Type ID | Option |
|---|---|---|---|---|---|---|
| 1-3 | - | - | - | Not Occupied | - | - |
| 4 | 0.75 | BN/L-GN | 1852 | Right Front Tweeter Speaker (+) | I | - |
| 5 | 0.75 | YE/D-BU | 1856 | Left Front Tweeter Speaker (+) | I | - |
| 6 | 1 | WH | 46 | Right Rear Speaker (+) | I | - |
| 7 | 1 | L-GN | 199 | Left Rear Speaker (+) | I | - |
| 8-11 | - | - | - | Not Occupied | - | - |
| 12 | 0.75 | VT/BN | 1952 | Right Front Tweeter Speaker (-) | I | - |
| 13 | 0.75 | YE/GY | 1956 | Left Front Tweeter Speaker (-) | I | - |
| 14 | 1 | D-BU/BK | 115 | Right Rear Speaker Signal (-) | I | - |
| 15 | 1 | L-GN/BK | 116 | Left Rear Speaker Signal (-) | I | - |
| 16 | - | - | - | Not Occupied | - | - |

## T3 Audio Amplifier X3

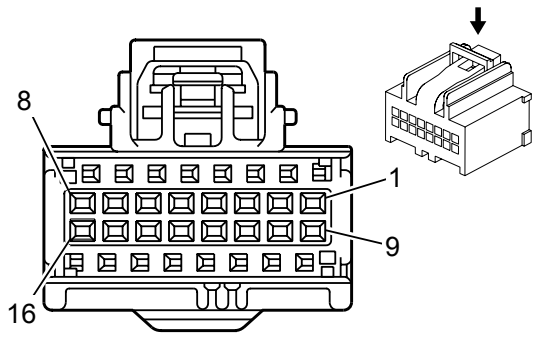


### Connector Part Information

Harness Type: Body

OEM Connector: 15491285

Service Connector: 15136073

Description: 16-Way F Kaizen 64 Series (BK)

### *Terminal Part Information*

| Terminal Type ID | Terminated Lead | Diagnostic Test Probe | Terminal Removal Tool | Service Terminal | Tray | Core Crimp | Insulation Crimp |
|---|---|---|---|---|---|---|---|
| I | Pending | J-35616-64B (L-BU) | J-38125-215A | Not Available | Not Available | Not Available | Not Available |
| II | 13587474 | J-35616-64B (L-BU) | J-38125-215A | Not Available | Not Available | P | P |

### *T3 Audio Amplifier X3*

| Pin | Size | Color | Circuit | Function | Terminal Type ID | Option |
|---|---|---|---|---|---|---|
| 1 | 0.75 | L-GN | 5060 | Low Speed GMLAN Serial Data | I | - |
| 2 | 0.35 | VT/D-BU | 6091 | Crankshaft Position Sensor Replicated Signal | II | - |
| 3 | - | - | - | Not Occupied | - | - |
| 4 | 0.35 | L-GN/BN | 3005 | Noise Reduction Microphone #1 Signal | II | - |
| 5 | 0.35 | D-BU/YE | 3006 | Noise Reduction Microphone #2 Signal | II | - |
| 6 | 0.35 | GY/D-BU | 3007 | Noise Reduction Microphone #3 Signal | II | - |
| 7-11 | - | - | - | Not Occupied | - | - |
| 12 | 0.35 | L-GN/BK | 3008 | Noise Reduction Microphone #1 Return | II | - |
| 13 | 0.35 | D-BU/BK | 3009 | Noise Reduction Microphone #2 Return | II | - |
| 14 | 0.35 | GY/BN | 3010 | Noise Reduction Microphone #3 Return | II | - |
| 15-16 | - | - | - | Not Occupied | - | - |

## T3 Audio Amplifier X4

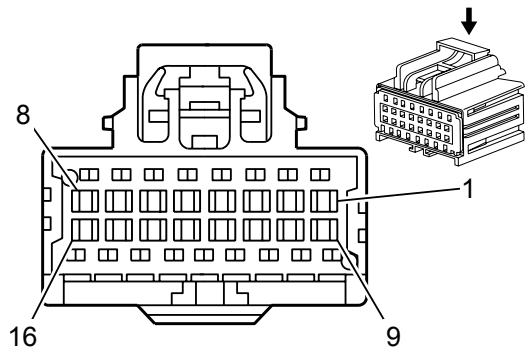


### Connector Part Information

Harness Type: Body

OEM Connector: 15466054

Service Connector: 15136074

Description: 16-Way F 0.64 Kaizen Series (BN)

### *Terminal Part Information*

| Terminal Type ID | Terminated Lead | Diagnostic Test Probe | Terminal Removal Tool | Service Terminal | Tray | Core Crimp | Insulation Crimp |
|---|---|---|---|---|---|---|---|
| I | 13587474 | J-35616-64B (L-BU) | J-38125-215A | Not Available | Not Available | P | P |

### *T3 Audio Amplifier X4*

| Pin | Size | Color | Circuit | Function | Terminal Type ID | Option |
|---|---|---|---|---|---|---|
| 1-2 | - | - | - | Not Occupied | - | - |
| 3 | 0.35 | WH/GN | 3997 | MOST Serial Data (-) | I | - |
| 4 | 0.35 | GY/VT | 3998 | MOST Serial Data (+) | I | - |
| 5 | 0.35 | WH/GN | 3997 | MOST Serial Data (-) | I | - |
| 6 | 0.35 | GY/VT | 3998 | MOST Serial Data (+) | I | - |
| 7-13 | - | - | - | Not Occupied | - | - |
| 14 | 0.35 | WH/VT | 3999 | MOST Control | I | - |
| 15-16 | - | - | - | Not Occupied | - | - |

## T8A Ignition Coil 1 (1500)

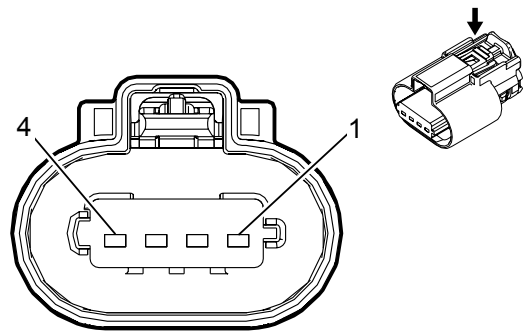


### Connector Part Information

Harness Type: Engine

OEM Connector: 13863211

Service Connector: 19301722

Description: 4-Way F 150 MX Series, Sealed (BK)

### *Terminal Part Information*

| Terminal Type ID | Terminated Lead | Diagnostic Test Probe | Terminal Removal Tool | Service Terminal | Tray | Core Crimp | Insulation Crimp |
|---|---|---|---|---|---|---|---|
| I | Not Available | J-35616-14 (GN) | J-38125-217 | Not Available | Not Available | Not Available | Not Available |

### *T8A Ignition Coil 1 (1500)*

| Pin | Size | Color | Circuit | Function | Terminal Type ID | Option |
|---|---|---|---|---|---|---|
| 1 | 0.75 | BK | 350 | Ground | I | - |
| 2 | 0.5 | BK/D-BU | 2129 | Ignition Control Low Reference Bank 1 | I | - |
| 3 | 0.5 | D-BU/VT | 2121 | Ignition Control (1) | I | - |
| 4 | 0.75 | VT/D-BU | 5291 | Powertrain Main Relay Fused Supply (2) | I | - |

## T8A Ignition Coil 1 (L96)

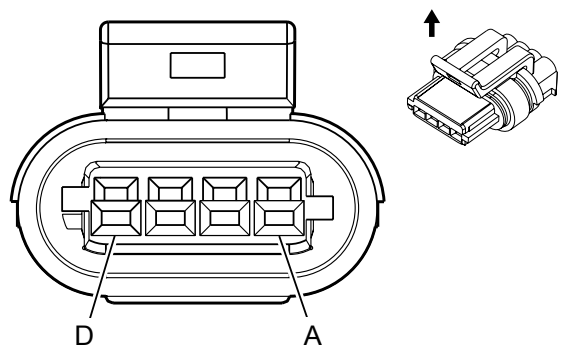


### Connector Part Information

Harness Type: Ignition Coil (Odd) Jumper

OEM Connector: 15439568

Service Connector: 88987184

Description: 4-Way F 150 GT Series, Sealed (BK)

### *Terminal Part Information*

| Terminal Type ID | Terminated Lead | Diagnostic Test Probe | Terminal Removal Tool | Service Terminal | Tray | Core Crimp | Insulation Crimp |
|---|---|---|---|---|---|---|---|
| I | Pending | Pending | Pending | Not Available | Not Available | Not Available | Not Available |
| II | 13576360 | J-35616-2A (GY) | J-38125-553 | 15326267 | 19 | E | 4 |

### *T8A Ignition Coil 1 (L96)*

| Pin | Size | Color | Circuit | Function | Terminal Type ID | Option |
|---|---|---|---|---|---|---|
| A | 0.8 | BK | 151 | Signal Ground | I | - |
| B | 0.5 | BN | 2129 | Ignition Control Low Reference Bank 1 | II | - |
| C | 0.5 | PU | 2121 | Ignition Control (1) | II | - |
| D | 0.8 | PK | 39 | Run/Crank Ignition 1 Voltage | I | - |

## T8B Ignition Coil 2 (1500)

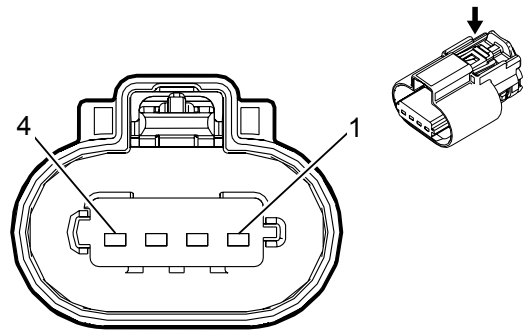


### Connector Part Information

Harness Type: Engine

OEM Connector: 13863211

Service Connector: 19301722

Description: 4-Way F 150 MX Series, Sealed (BK)

### *Terminal Part Information*

| Terminal Type ID | Terminated Lead | Diagnostic Test Probe | Terminal Removal Tool | Service Terminal | Tray | Core Crimp | Insulation Crimp |
|---|---|---|---|---|---|---|---|
| I | Not Available | J-35616-14 (GN) | J-38125-217 | Not Available | Not Available | Not Available | Not Available |

### *T8B Ignition Coil 2 (1500)*

| Pin | Size | Color | Circuit | Function | Terminal Type ID | Option |
|---|---|---|---|---|---|---|
| 1 | 0.75 | BK | 350 | Ground | I | - |
| 2 | 0.5 | BK/GY | 2130 | Ignition Control Low Reference Bank 2 | I | - |
| 3 | 0.5 | D-BU/WH | 2122 | Ignition Control (2) | I | - |
| 4 | 0.75 | VT/D-BU | 5292 | Powertrain Main Relay Fused Supply (3) | I | - |

## T8B Ignition Coil 2 (L96)

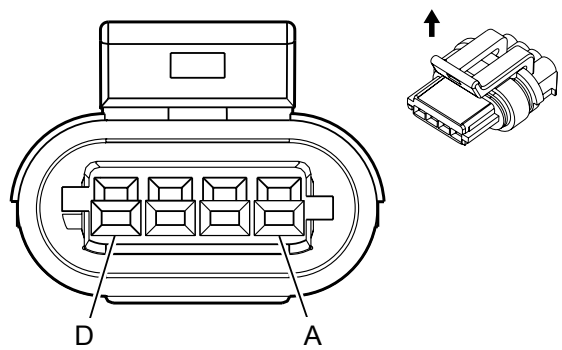


### Connector Part Information

Harness Type: Ignition Coil (Even) Jumper

OEM Connector: 15439568

Service Connector: 88987184

Description: 4-Way F 150 GT Series, Sealed (BK)

### *Terminal Part Information*

| Terminal Type ID | Terminated Lead | Diagnostic Test Probe | Terminal Removal Tool | Service Terminal | Tray | Core Crimp | Insulation Crimp |
|---|---|---|---|---|---|---|---|
| I | Pending | Pending | Pending | Not Available | Not Available | Not Available | Not Available |
| II | 13576360 | J-35616-2A (GY) | J-38125-553 | 15326267 | 19 | E | 4 |

### *T8B Ignition Coil 2 (L96)*

| Pin | Size | Color | Circuit | Function | Terminal Type ID | Option |
|---|---|---|---|---|---|---|
| A | 0.8 | BK | 151 | Signal Ground | I | - |
| B | 0.5 | BN | 2129 | Ignition Control Low Reference Bank 1 | II | - |
| C | 0.5 | RD | 2127 | Ignition Control (7) | II | - |
| D | 0.8 | PK | 39 | Run/Crank Ignition 1 Voltage | I | - |

## T8C Ignition Coil 3 (1500)

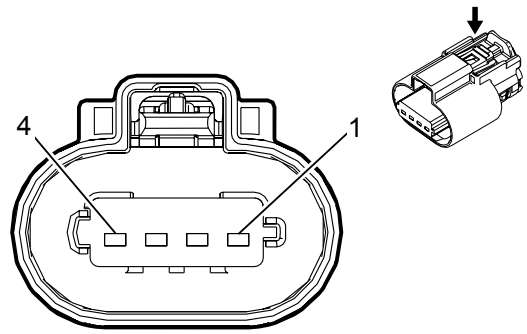


### Connector Part Information

Harness Type: Engine

OEM Connector: 13863211

Service Connector: 19301722

Description: 4-Way F 150 MX Series, Sealed (BK)

### *Terminal Part Information*

| Terminal Type ID | Terminated Lead | Diagnostic Test Probe | Terminal Removal Tool | Service Terminal | Tray | Core Crimp | Insulation Crimp |
|---|---|---|---|---|---|---|---|
| I | Not Available | J-35616-14 (GN) | J-38125-217 | Not Available | Not Available | Not Available | Not Available |

### *T8C Ignition Coil 3 (1500)*

| Pin | Size | Color | Circuit | Function | Terminal Type ID | Option |
|---|---|---|---|---|---|---|
| 1 | 0.75 | BK | 350 | Ground | I | - |
| 2 | 0.5 | BK/D-BU | 2129 | Ignition Control Low Reference Bank 1 | I | - |
| 3 | 0.5 | L-GN/D-BU | 2123 | Ignition Control (3) | I | - |
| 4 | 0.75 | VT/D-BU | 5291 | Powertrain Main Relay Fused Supply (2) | I | - |

## T8C Ignition Coil 3 (L96)

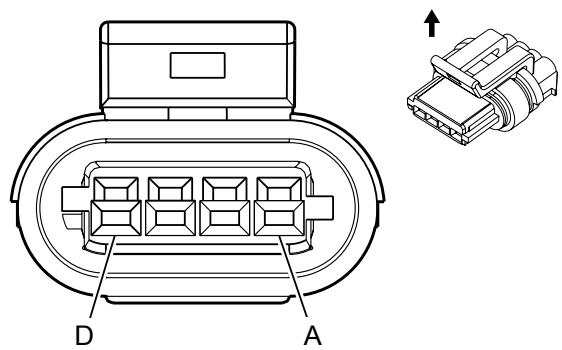


### Connector Part Information

Harness Type: Ignition Coil (Odd) Jumper

OEM Connector: 15439568

Service Connector: 88987184

Description: 4-Way F 150 GT Series, Sealed (BK)

### *Terminal Part Information*

| Terminal Type ID | Terminated Lead | Diagnostic Test Probe | Terminal Removal Tool | Service Terminal | Tray | Core Crimp | Insulation Crimp |
|---|---|---|---|---|---|---|---|
| I | Pending | Pending | Pending | Not Available | Not Available | Not Available | Not Available |
| II | 13576360 | J-35616-2A (GY) | J-38125-553 | 15326267 | 19 | E | 4 |

### *T8C Ignition Coil 3 (L96)*

| Pin | Size | Color | Circuit | Function | Terminal Type ID | Option |
|---|---|---|---|---|---|---|
| A | 0.8 | BK | 151 | Signal Ground | I | - |
| B | 0.5 | BN | 2129 | Ignition Control Low Reference Bank 1 | II | - |
| C | 0.5 | L-BU | 2123 | Ignition Control (3) | II | - |
| D | 0.8 | PK | 39 | Run/Crank Ignition 1 Voltage | I | - |

## T8D Ignition Coil 4 (1500)

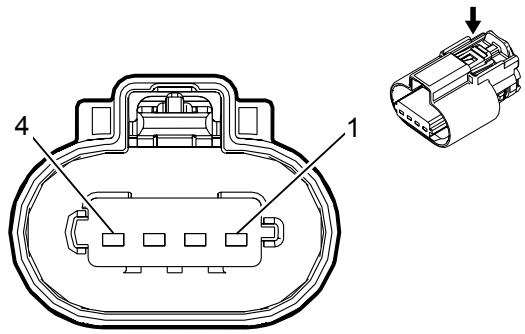


### Connector Part Information

Harness Type: Engine

OEM Connector: 13863211

Service Connector: 19301722

Description: 4-Way F 150 MX Series, Sealed (BK)

### *Terminal Part Information*

| Terminal Type ID | Terminated Lead | Diagnostic Test Probe | Terminal Removal Tool | Service Terminal | Tray | Core Crimp | Insulation Crimp |
|---|---|---|---|---|---|---|---|
| I | Not Available | J-35616-14 (GN) | J-38125-217 | Not Available | Not Available | Not Available | Not Available |

### *T8D Ignition Coil 4 (1500)*

| Pin | Size | Color | Circuit | Function | Terminal Type ID | Option |
|---|---|---|---|---|---|---|
| 1 | 0.75 | BK | 350 | Ground | I | - |
| 2 | 0.5 | BK/GY | 2130 | Ignition Control Low Reference Bank 2 | I | - |
| 3 | 0.5 | YE/D-BU | 2124 | Ignition Control (4) | I | - |
| 4 | 0.75 | VT/D-BU | 5292 | Powertrain Main Relay Fused Supply (3) | I | - |

## T8D Ignition Coil 4 (L96)

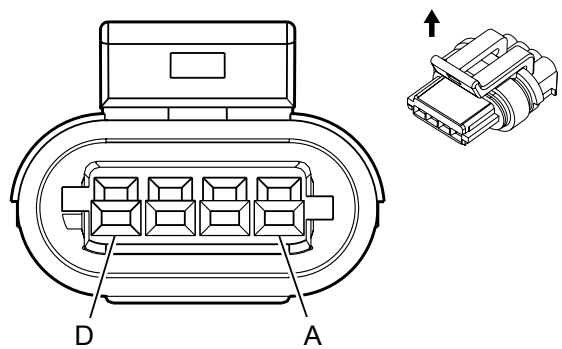


### Connector Part Information

Harness Type: Ignition Coil (Even) Jumper

OEM Connector: 15439568

Service Connector: 88987184

Description: 4-Way F 150 GT Series, Sealed (BK)

### *Terminal Part Information*

| Terminal Type ID | Terminated Lead | Diagnostic Test Probe | Terminal Removal Tool | Service Terminal | Tray | Core Crimp | Insulation Crimp |
|---|---|---|---|---|---|---|---|
| I | Pending | Pending | Pending | Not Available | Not Available | Not Available | Not Available |
| II | 13576360 | J-35616-2A (GY) | J-38125-553 | 15326267 | 19 | E | 4 |

### *T8D Ignition Coil 4 (L96)*

| Pin | Size | Color | Circuit | Function | Terminal Type ID | Option |
|---|---|---|---|---|---|---|
| A | 0.8 | BK | 151 | Signal Ground | I | - |
| B | 0.5 | BN | 2129 | Ignition Control Low Reference Bank 1 | II | - |
| C | 0.5 | D-GN | 2125 | Ignition Control (5) | II | - |
| D | 0.8 | PK | 39 | Run/Crank Ignition 1 Voltage | I | - |

## T8E Ignition Coil 5 (1500)

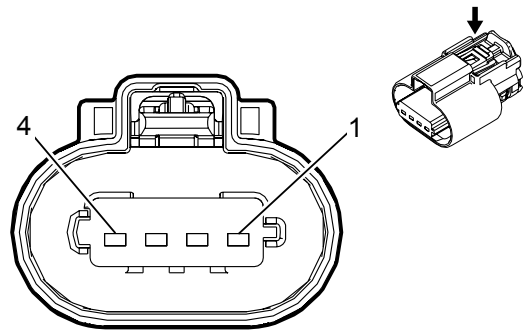


### Connector Part Information

Harness Type: Engine

OEM Connector: 13863211

Service Connector: 19301722

Description: 4-Way F 150 MX Series, Sealed (BK)

### *Terminal Part Information*

| Terminal Type ID | Terminated Lead | Diagnostic Test Probe | Terminal Removal Tool | Service Terminal | Tray | Core Crimp | Insulation Crimp |
|---|---|---|---|---|---|---|---|
| I | Not Available | J-35616-14 (GN) | J-38125-217 | Not Available | Not Available | Not Available | Not Available |

### *T8E Ignition Coil 5 (1500)*

| Pin | Size | Color | Circuit | Function | Terminal Type ID | Option |
|---|---|---|---|---|---|---|
| 1 | 0.75 | BK | 350 | Ground | I | - |
| 2 | 0.5 | BK/D-BU | 2129 | Ignition Control Low Reference Bank 1 | I | - |
| 3 | 0.5 | D-BU/GY | 2125 | Ignition Control (5) | I | - |
| 4 | 0.75 | VT/D-BU | 5291 | Powertrain Main Relay Fused Supply (2) | I | - |

## T8E Ignition Coil 5 (L96)

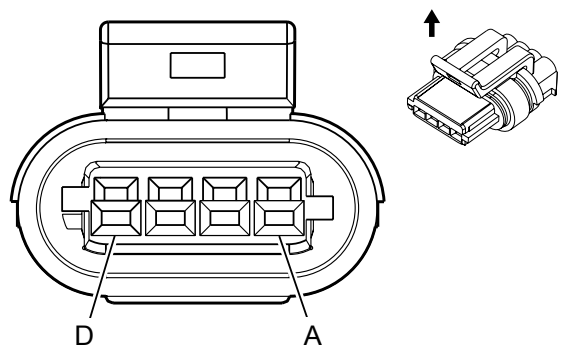


### Connector Part Information

Harness Type: Ignition Coil (Odd) Jumper

OEM Connector: 15439568

Service Connector: 88987184

Description: 4-Way F 150 GT Series, Sealed (BK)

### *Terminal Part Information*

| Terminal Type ID | Terminated Lead | Diagnostic Test Probe | Terminal Removal Tool | Service Terminal | Tray | Core Crimp | Insulation Crimp |
|---|---|---|---|---|---|---|---|
| I | Pending | Pending | Pending | Not Available | Not Available | Not Available | Not Available |
| II | 13576360 | J-35616-2A (GY) | J-38125-553 | 15326267 | 19 | E | 4 |

### *T8E Ignition Coil 5 (L96)*

| Pin | Size | Color | Circuit | Function | Terminal Type ID | Option |
|---|---|---|---|---|---|---|
| A | 0.8 | BK | 151 | Signal Ground | I | - |
| B | 0.5 | BN | 2129 | Ignition Control Low Reference Bank 1 | II | - |
| C | 0.5 | D-GN | 2125 | Ignition Control (5) | II | - |
| D | 0.8 | PK | 39 | Run/Crank Ignition 1 Voltage | I | - |

## T8F Ignition Coil 6 (1500)

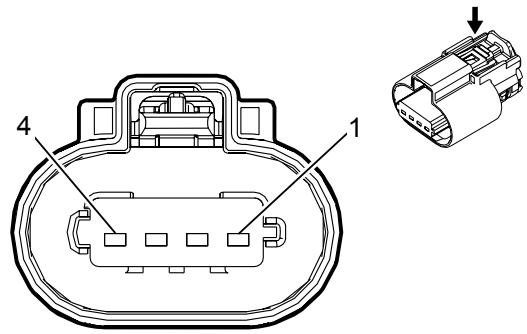


### Connector Part Information

Harness Type: Engine

OEM Connector: 13863211

Service Connector: 19301722

Description: 4-Way F 150 MX Series, Sealed (BK)

### *Terminal Part Information*

| Terminal Type ID | Terminated Lead | Diagnostic Test Probe | Terminal Removal Tool | Service Terminal | Tray | Core Crimp | Insulation Crimp |
|---|---|---|---|---|---|---|---|
| I | Not Available | J-35616-14 (GN) | J-38125-217 | Not Available | Not Available | Not Available | Not Available |

### *T8F Ignition Coil 6 (1500)*

| Pin | Size | Color | Circuit | Function | Terminal Type ID | Option |
|---|---|---|---|---|---|---|
| 1 | 0.75 | BK | 350 | Ground | I | - |
| 2 | 0.5 | BK/GY | 2130 | Ignition Control Low Reference Bank 2 | I | - |
| 3 | 0.5 | BN/D-BU | 2126 | Ignition Control (6) | I | - |
| 4 | 0.75 | VT/D-BU | 5292 | Powertrain Main Relay Fused Supply (3) | I | - |

## T8F Ignition Coil 6 (L96)

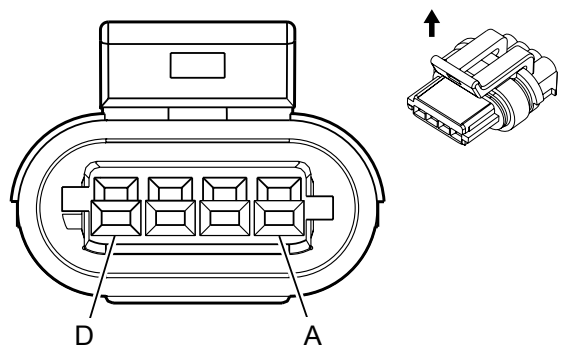


### Connector Part Information

Harness Type: Ignition Coil (Even) Jumper

OEM Connector: 15439568

Service Connector: 88987184

Description: 4-Way F 150 GT Series, Sealed (BK)

### *Terminal Part Information*

| Terminal Type ID | Terminated Lead | Diagnostic Test Probe | Terminal Removal Tool | Service Terminal | Tray | Core Crimp | Insulation Crimp |
|---|---|---|---|---|---|---|---|
| I | Pending | Pending | Pending | Not Available | Not Available | Not Available | Not Available |
| II | 13576360 | J-35616-2A (GY) | J-38125-553 | 15326267 | 19 | E | 4 |

### *T8F Ignition Coil 6 (L96)*

| Pin | Size | Color | Circuit | Function | Terminal Type ID | Option |
|---|---|---|---|---|---|---|
| A | 0.8 | BK | 151 | Signal Ground | I | - |
| B | 0.5 | BN | 2129 | Ignition Control Low Reference Bank 1 | II | - |
| C | 0.5 | L-BU | 2123 | Ignition Control (3) | II | - |
| D | 0.8 | PK | 39 | Run/Crank Ignition 1 Voltage | I | - |

## T8G Ignition Coil 7 (L83/L86)

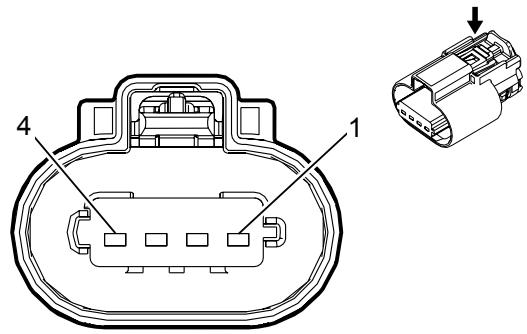


### Connector Part Information

Harness Type: Engine

OEM Connector: 13863211

Service Connector: 19301722

Description: 4-Way F 150 MX Series, Sealed (BK)

### *Terminal Part Information*

| Terminal Type ID | Terminated Lead | Diagnostic Test Probe | Terminal Removal Tool | Service Terminal | Tray | Core Crimp | Insulation Crimp |
|---|---|---|---|---|---|---|---|
| I | Not Available | J-35616-14 (GN) | J-38125-217 | Not Available | Not Available | Not Available | Not Available |

### *T8G Ignition Coil 7 (L83/L86)*

| Pin | Size | Color | Circuit | Function | Terminal Type ID | Option |
|---|---|---|---|---|---|---|
| 1 | 0.75 | BK | 350 | Ground | I | - |
| 2 | 0.5 | BK/D-BU | 2129 | Ignition Control Low Reference Bank 1 | I | - |
| 3 | 0.5 | L-GN/GY | 2127 | Ignition Control (7) | I | - |
| 4 | 0.75 | VT/D-BU | 5291 | Powertrain Main Relay Fused Supply (2) | I | - |

## T8G Ignition Coil 7 (L96)

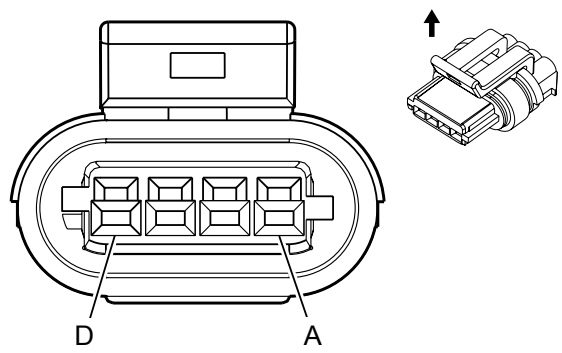


### Connector Part Information

Harness Type: Ignition Coil (Odd) Jumper

OEM Connector: 15439568

Service Connector: 88987184

Description: 4-Way F 150 GT Series, Sealed (BK)

### *Terminal Part Information*

| Terminal Type ID | Terminated Lead | Diagnostic Test Probe | Terminal Removal Tool | Service Terminal | Tray | Core Crimp | Insulation Crimp |
|---|---|---|---|---|---|---|---|
| I | Pending | Pending | Pending | Not Available | Not Available | Not Available | Not Available |
| II | 13576360 | J-35616-2A (GY) | J-38125-553 | 15326267 | 19 | E | 4 |

### *T8G Ignition Coil 7 (L96)*

| Pin | Size | Color | Circuit | Function | Terminal Type ID | Option |
|---|---|---|---|---|---|---|
| A | 0.8 | BK | 151 | Signal Ground | I | - |
| B | 0.5 | BN | 2129 | Ignition Control Low Reference Bank 1 | II | - |
| C | 0.5 | RD | 2127 | Ignition Control (7) | II | - |
| D | 0.8 | PK | 39 | Run/Crank Ignition 1 Voltage | I | - |

## T8H Ignition Coil 8 (L83/L86)

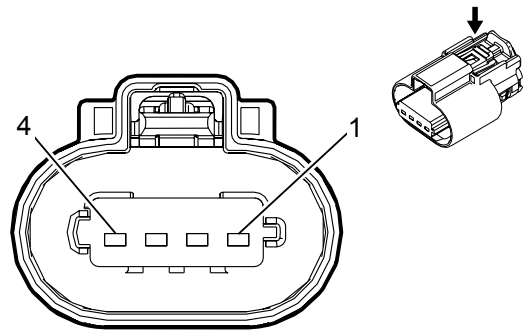


### Connector Part Information

Harness Type: Engine

OEM Connector: 13863211

Service Connector: 19301722

Description: 4-Way F 150 MX Series, Sealed (BK)

### *Terminal Part Information*

| Terminal Type ID | Terminated Lead | Diagnostic Test Probe | Terminal Removal Tool | Service Terminal | Tray | Core Crimp | Insulation Crimp |
|---|---|---|---|---|---|---|---|
| I | Not Available | J-35616-14 (GN) | J-38125-217 | Not Available | Not Available | Not Available | Not Available |

### *T8H Ignition Coil 8 (L83/L86)*

| Pin | Size | Color | Circuit | Function | Terminal Type ID | Option |
|---|---|---|---|---|---|---|
| 1 | 0.75 | BK | 350 | Ground | I | - |
| 2 | 0.5 | BK/GY | 2130 | Ignition Control Low Reference Bank 2 | I | - |
| 3 | 0.5 | VT/WH | 2128 | Ignition Control (8) | I | - |
| 4 | 0.75 | VT/D-BU | 5292 | Powertrain Main Relay Fused Supply (3) | I | - |

## T8H Ignition Coil 8 (L96)

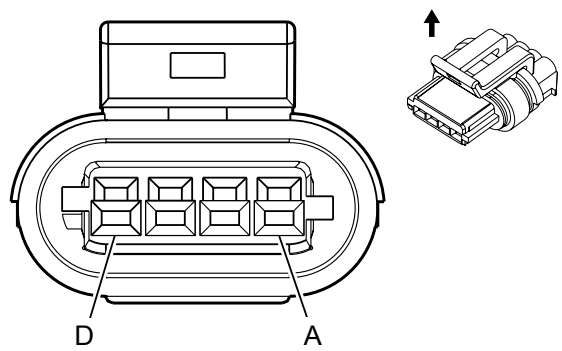


### Connector Part Information

Harness Type: Ignition Coil (Even) Jumper

OEM Connector: 15439568

Service Connector: 88987184

Description: 4-Way F 150 GT Series, Sealed (BK)

### *Terminal Part Information*

| Terminal Type ID | Terminated Lead | Diagnostic Test Probe | Terminal Removal Tool | Service Terminal | Tray | Core Crimp | Insulation Crimp |
|---|---|---|---|---|---|---|---|
| I | Pending | Pending | Pending | Not Available | Not Available | Not Available | Not Available |
| II | 13576360 | J-35616-2A (GY) | J-38125-553 | 15326267 | 19 | E | 4 |

### *T8H Ignition Coil 8 (L96)*

| Pin | Size | Color | Circuit | Function | Terminal Type ID | Option |
|---|---|---|---|---|---|---|
| A | 0.8 | BK | 151 | Signal Ground | I | - |
| B | 0.5 | BN | 2129 | Ignition Control Low Reference Bank 1 | II | - |
| C | 0.5 | PU | 2121 | Ignition Control (1) | II | - |
| D | 0.8 | PK | 39 | Run/Crank Ignition 1 Voltage | I | - |

## X80A Accessory Power Receptacle - Center Console 1

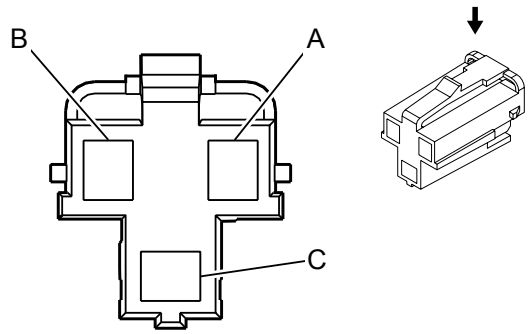


### Connector Part Information

Harness Type: Floor Console

OEM Connector: 12176836

Service Connector: 19257374

Description: 3-Way F 280 Metri Pack Series (GY)

### *Terminal Part Information*

| Terminal Type ID | Terminated Lead | Diagnostic Test Probe | Terminal Removal Tool | Service Terminal | Tray | Core Crimp | Insulation Crimp |
|---|---|---|---|---|---|---|---|
| I | Pending | J-35616-4A (PU) | J-38125-553 | 12110842 | 4 | C | A |

### *X80A Accessory Power Receptacle - Center Console 1*

| Pin | Size | Color | Circuit | Function | Terminal Type ID | Option |
|---|---|---|---|---|---|---|
| A | 1.5 | VT/YE | 143 | Accessory Voltage | I | - |
| B | - | - | - | Not Occupied | - | - |
| C | 1.5 | BK | 1050 | Ground | I | - |

## X80B Accessory Power Receptacle - Center Console 2

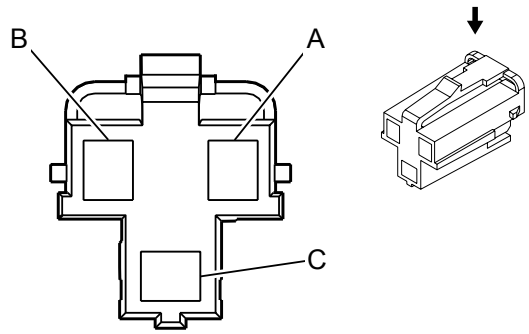


### Connector Part Information

Harness Type: Floor Console

OEM Connector: 12176836

Service Connector: 19257374

Description: 3-Way F 280 Metri Pack Series (GY)

### *Terminal Part Information*

| Terminal Type ID | Terminated Lead | Diagnostic Test Probe | Terminal Removal Tool | Service Terminal | Tray | Core Crimp | Insulation Crimp |
|---|---|---|---|---|---|---|---|
| I | Pending | J-35616-4A (PU) | J-38125-553 | 12110842 | 4 | C | A |

### *X80B Accessory Power Receptacle - Center Console 2*

| Pin | Size | Color | Circuit | Function | Terminal Type ID | Option |
|---|---|---|---|---|---|---|
| A | 1.5 | VT/YE | 243 | Accessory Voltage | I | - |
| B | - | - | - | Not Occupied | - | - |
| C | 1.5 | BK | 1050 | Ground | I | - |

## X80D Accessory Power Receptacle - Center Console Compartment

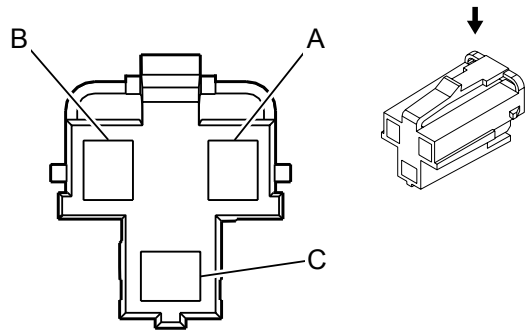


### Connector Part Information

Harness Type: Center Seat

OEM Connector: 12176836

Service Connector: 19257374

Description: 3-Way F 280 Metri Pack Series (GY)

### *Terminal Part Information*

| Terminal Type ID | Terminated Lead | Diagnostic Test Probe | Terminal Removal Tool | Service Terminal | Tray | Core Crimp | Insulation Crimp |
|---|---|---|---|---|---|---|---|
| I | Not Available | J-35616-4A (PU) | J-38125-553 | 12110844 | 4 | Not Available | Not Available |

### *X80D Accessory Power Receptacle - Center Console Compartment*

| Pin | Size | Color | Circuit | Function | Terminal Type ID | Option |
|---|---|---|---|---|---|---|
| A | 1.5 | RD/L-BU | 840 | Battery Positive Voltage | I | - |
| B | - | - | - | Not Occupied | - | - |
| C | 1.5 | BK | 1250 | Ground | I | - |

## X80E Accessory Power Receptacle - Center Seat

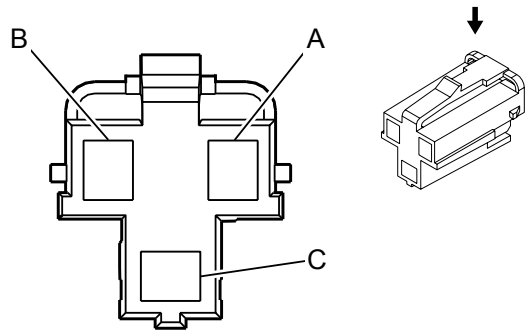


### Connector Part Information

Harness Type: Center Seat

OEM Connector: 12176836

Service Connector: 19257374

Description: 3-Way F 280 Metri Pack Series (GY)

### *Terminal Part Information*

| Terminal Type ID | Terminated Lead | Diagnostic Test Probe | Terminal Removal Tool | Service Terminal | Tray | Core Crimp | Insulation Crimp |
|---|---|---|---|---|---|---|---|
| I | Not Available | J-35616-4A (PU) | J-38125-553 | 12110844 | 4 | Not Available | Not Available |

### *X80E Accessory Power Receptacle - Center Seat*

| Pin | Size | Color | Circuit | Function | Terminal Type ID | Option |
|---|---|---|---|---|---|---|
| A | 1.5 | RD/L-BU | 840 | Battery Positive Voltage | I | - |
| B | - | - | - | Not Occupied | - | - |
| C | 1.5 | BK | 1250 | Ground | I | - |

## X80J Accessory Power Receptacle - Instrument Panel 1

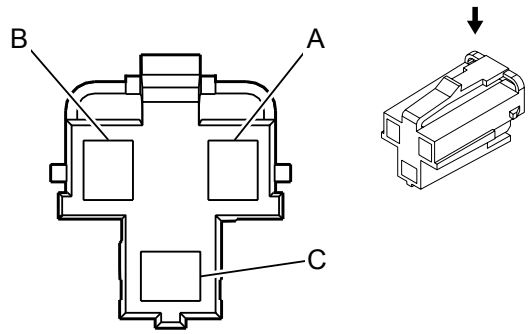


### Connector Part Information

Harness Type: Instrument Panel

OEM Connector: 12176836

Service Connector: 19257374

Description: 3-Way F 280 Metri Pack Series (GY)

### *Terminal Part Information*

| Terminal Type ID | Terminated Lead | Diagnostic Test Probe | Terminal Removal Tool | Service Terminal | Tray | Core Crimp | Insulation Crimp |
|---|---|---|---|---|---|---|---|
| I | Not Available | J-35616-4A (PU) | J-38125-12A | 12191475 | 1 | 4 | G |

### *X80J Accessory Power Receptacle - Instrument Panel 1*

| Pin | Size | Color | Circuit | Function | Terminal Type ID | Option |
|---|---|---|---|---|---|---|
| A | 1.5 | RD/WH | 1040 | Battery Positive Voltage | I | - |
| B | - | - | - | Not Occupied | - | - |
| C | 1.5 | BK | 1050 | Ground | I | - |

## X80K Accessory Power Receptacle - Instrument Panel 2

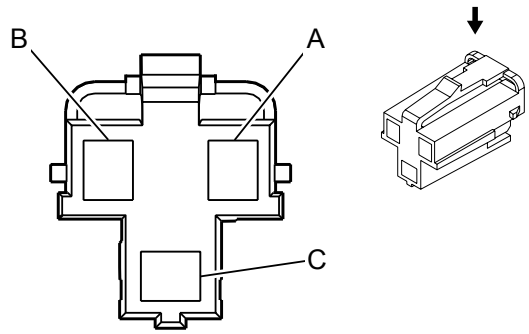


### Connector Part Information

Harness Type: Instrument Panel

OEM Connector: 12176836

Service Connector: 19257374

Description: 3-Way F 280 Metri Pack Series (GY)

### *Terminal Part Information*

| Terminal Type ID | Terminated Lead | Diagnostic Test Probe | Terminal Removal Tool | Service Terminal | Tray | Core Crimp | Insulation Crimp |
|---|---|---|---|---|---|---|---|
| I | Not Available | J-35616-4A (PU) | J-38125-12A | 12191475 | 1 | 4 | G |

### *X80K Accessory Power Receptacle - Instrument Panel 2*

| Pin | Size | Color | Circuit | Function | Terminal Type ID | Option |
|---|---|---|---|---|---|---|
| A | 1.5 | RD/BN | 4240 | Battery Positive Voltage | I | - |
| B | - | - | - | Not Occupied | - | - |
| C | 1.5 | BK | 1050 | Ground | I | - |

## X80S Accessory Power Receptacle - Instrument Panel 3

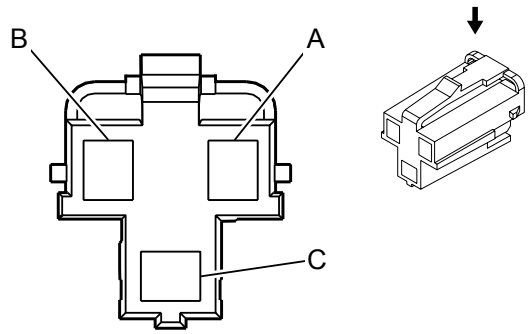


### Connector Part Information

Harness Type: Instrument Panel

OEM Connector: 12176836

Service Connector: 19257374

Description: 3-Way F 280 Metri Pack Series (GY)

### *Terminal Part Information*

| Terminal Type ID | Terminated Lead | Diagnostic Test Probe | Terminal Removal Tool | Service Terminal | Tray | Core Crimp | Insulation Crimp |
|---|---|---|---|---|---|---|---|
| I | Pending | J-35616-4A (PU) | J-38125-12A | 12191475 | 1 | 4 | G |

### *X80S Accessory Power Receptacle - Instrument Panel 3*

| Pin | Size | Color | Circuit | Function | Terminal Type ID | Option |
|---|---|---|---|---|---|---|
| A | 1.5 | RD/BN | 4240 | Battery Positive Voltage | I | - |
| B | - | - | - | Not Occupied | - | - |
| C | 1.5 | BK | 1050 | Ground | I | - |

## X81B Accessory Power Receptacle - 220V AC X1

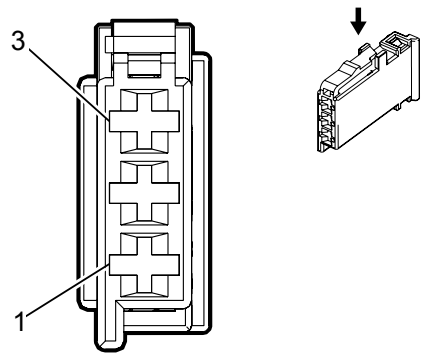


### Connector Part Information

Harness Type: Instrument Panel

OEM Connector: 10865339

Service Connector: 93186706

Description: 3-Way F 1.6 Micro Timer Series, Sealed (BK)

### *Terminal Part Information*

| Terminal Type ID | Terminated Lead | Diagnostic Test Probe | Terminal Removal Tool | Service Terminal | Tray | Core Crimp | Insulation Crimp |
|---|---|---|---|---|---|---|---|
| I | Pending | J-35616-14 (GN) | J-38125-560 | 962943-5 | 16 | E | A |
| II | Pending | J-35616-14 (GN) | J-38125-560 | 962943-5 | 16 | Not Available | Not Available |

### *X81B Accessory Power Receptacle - 220V AC X1*

| Pin | Size | Color | Circuit | Function | Terminal Type ID | Option |
|---|---|---|---|---|---|---|
| 1 | 0.5 | VT/BN | 300 | Run Ignition 3 Voltage | I | - |
| 2 | - | - | - | Not Occupied | - | - |
| 3 | 1.5 | BK | 5683 | 120 VAC Phase A | II | - |

## X81B Accessory Power Receptacle - 220V AC X2

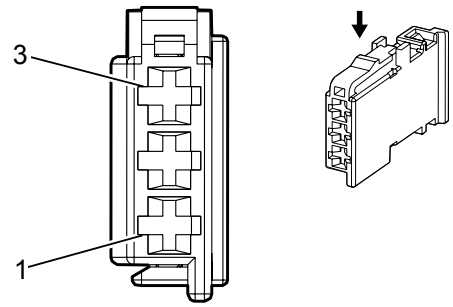


### Connector Part Information

Harness Type: Instrument Panel

OEM Connector: 13648774

Service Connector: 13583924

Description: 3-Way F 1.6 Timer Series, Sealed (GY)

### *Terminal Part Information*

| Terminal Type ID | Terminated Lead | Diagnostic Test Probe | Terminal Removal Tool | Service Terminal | Tray | Core Crimp | Insulation Crimp |
|---|---|---|---|---|---|---|---|
| I | Pending | J-35616-14 (GN) | J-38125-560 | 962943-5 | 16 | Not Available | Not Available |

### *X81B Accessory Power Receptacle - 220V AC X2*

| Pin | Size | Color | Circuit | Function | Terminal Type ID | Option |
|---|---|---|---|---|---|---|
| 1 | 0.35 | D-BU/BN | 6807 | DC To AC Inverter Control | I | - |
| 2 | - | - | - | Not Occupied | - | - |
| 3 | 1.5 | RD | 5684 | 120 VAC Phase B | I | - |

## X81 Accessory Power Receptacle - 110V AC X1

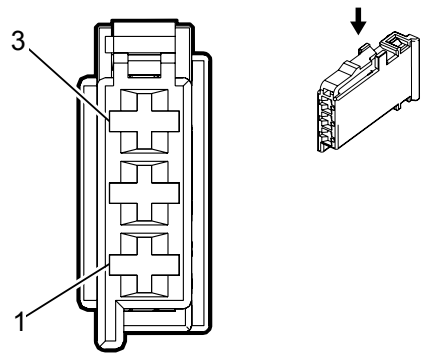


### Connector Part Information

Harness Type: Instrument Panel

OEM Connector: 10865339

Service Connector: 93186706

Description: 3-Way F 1.6 Micro Timer Series (BK)

### *Terminal Part Information*

| Terminal Type ID | Terminated Lead | Diagnostic Test Probe | Terminal Removal Tool | Service Terminal | Tray | Core Crimp | Insulation Crimp |
|---|---|---|---|---|---|---|---|
| I | Not Available | J-35616-14 (GN) | J-38125-560 | 962943-5 | 16 | E | A |
| II | Not Available | J-35616-14 (GN) | J-38125-560 | 962943-5 | 16 | Not Available | Not Available |

### *X81 Accessory Power Receptacle - 110V AC X1*

| Pin | Size | Color | Circuit | Function | Terminal Type ID | Option |
|---|---|---|---|---|---|---|
| 1 | 0.5 | VT/BN | 300 | Run Ignition 3 Voltage | I | - |
| 2 | - | - | - | Not Occupied | - | - |
| 3 | 1.5 | BK | 5683 | 120 VAC Phase A | II | - |

## X81 Accessory Power Receptacle - 110V AC X2

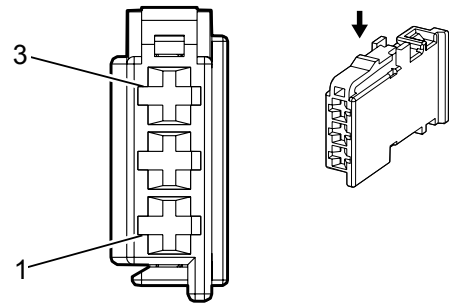


### Connector Part Information

Harness Type: Instrument Panel

OEM Connector: 13648774

Service Connector: 13583924

Description: 3-Way F 1.6 Timer Series, Sealed (GY)

### *Terminal Part Information*

| Terminal Type ID | Terminated Lead | Diagnostic Test Probe | Terminal Removal Tool | Service Terminal | Tray | Core Crimp | Insulation Crimp |
|---|---|---|---|---|---|---|---|
| I | Not Available | J-35616-14 (GN) | J-38125-560 | 962943-5 | 16 | Not Available | Not Available |

### *X81 Accessory Power Receptacle - 110V AC X2*

| Pin | Size | Color | Circuit | Function | Terminal Type ID | Option |
|---|---|---|---|---|---|---|
| 1 | 0.35 | D-BU/BN | 6807 | DC To AC Inverter Control | I | - |
| 2 | - | - | - | Not Occupied | - | - |
| 3 | 1.5 | RD | 5684 | 120 VAC Phase B | I | - |

## X82 Audio/Video Input Adapter

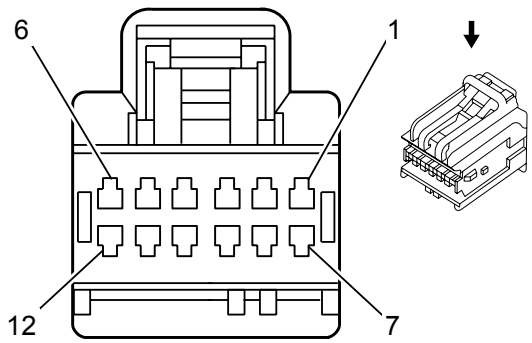


### Connector Part Information

Harness Type: Floor Console

OEM Connector: 13551678

Service Connector: 89047364

Description: 12-Way F 0.64 Series (BK)

### *Terminal Part Information*

| Terminal Type ID | Terminated Lead | Diagnostic Test Probe | Terminal Removal Tool | Service Terminal | Tray | Core Crimp | Insulation Crimp |
|---|---|---|---|---|---|---|---|
| I | 13327120 | J-35616-64B (L-BU) | J-38125-215A | SAIT-A03T-M064 | 14 | P | P |
| II | Pending | J-35616-64B (L-BU) | J-38125-215A | Not Available | Not Available | Not Available | Not Available |

### *X82 Audio/Video Input Adapter*

| Pin | Size | Color | Circuit | Function | Terminal Type ID | Option |
|---|---|---|---|---|---|---|
| 1 | 0.35 | BK | 2550 | Ground | I | - |
| 2 | - | - | - | Not Occupied | - | - |
| 3 | 0.35 | L-GN/WH | 3355 | Left Rear Seat Audio Headphone Signal | I | - |
| 4 | 0.35 | WH | 2058 | Right Auxiliary Audio Signal (1) | I | - |
| 5 | 0.35 | YE | 2059 | Left Auxiliary Audio Signal (1) | I | - |
| 6 | 0.35 | YE | 2056 | Auxiliary Video High Signal | I | - |
| 7 | 0.75 | RD/VT | 340 | Battery Positive Voltage | II | - |
| 8 | - | - | - | Not Occupied | - | - |
| 9 | 0.35 | BN/GY | 3357 | Right Rear Seat Audio Headphone Signal | I | - |
| 10 | 0.35 | D-BU/VT | 3356 | Rear Seat Audio Headphone Common Signal | I | - |
| 11 | 0.35 | BN | 3374 | Auxiliary Audio Common Signal (2) | I | - |
| 12 | 0.5 | BARE | 2057 | Auxiliary Video Low Signal | I | - |

## X83 Auxiliary Audio Input

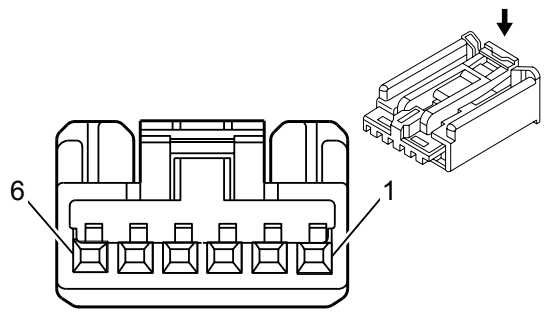


### Connector Part Information

Harness Type: Floor Console

OEM Connector: 13595476

Service Connector: 19167753

Description: 6-Way F 0.64 Kaizen Series (BK)

### *Terminal Part Information*

| Terminal Type ID | Terminated Lead | Diagnostic Test Probe | Terminal Removal Tool | Service Terminal | Tray | Core Crimp | Insulation Crimp |
|---|---|---|---|---|---|---|---|
| I | 13327120 | J-35616-64B (L-BU) | J-38125-215A | SAIT-A03T-M064 | 14 | P | P |
| II | Pending | J-35616-64B (L-BU) | J-38125-215A | Not Available | Not Available | Not Available | Not Available |

### *X83 Auxiliary Audio Input*

| Pin | Size | Color | Circuit | Function | Terminal Type ID | Option |
|---|---|---|---|---|---|---|
| 1 | 0.35 | GY | 5839 | Left Auxiliary Audio Signal (2) | I | - |
| 2 | 0.35 | L-GN | 5841 | Right Auxiliary Audio Signal (2) | I | - |
| 3 | 0.35 | VT | 5843 | Auxiliary Audio Common Signal | I | - |
| 4 | 0.35 | BK | 2550 | Ground | I | - |
| 5 | 0.35 | D-BU | 2060 | Auxiliary Detection Signal | I | - |
| 6 | 0.75 | RD/VT | 340 | Battery Positive Voltage | II | - |

## X83 Auxiliary Audio Input X1 (D09)

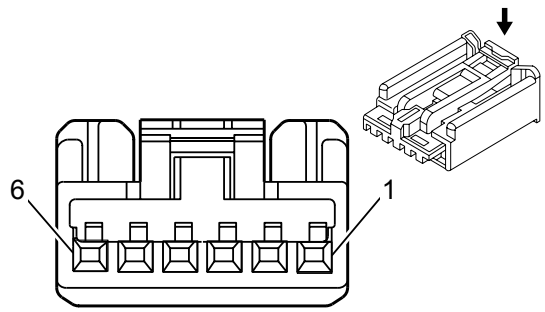


### Connector Part Information

Harness Type: Center Seat

OEM Connector: AIT2PB-06-1AK

Service Connector: 19167753

Description: 6-Way F 0.64 Kaizen Series (BK)

### *Terminal Part Information*

| Terminal Type ID | Terminated Lead | Diagnostic Test Probe | Terminal Removal Tool | Service Terminal | Tray | Core Crimp | Insulation Crimp |
|---|---|---|---|---|---|---|---|
| I | Not Available | Not Available | Not Available | Not Available | Not Available | Not Available | Not Available |

### *X83 Auxiliary Audio Input X1 (D09)*

| Pin | Size | Color | Circuit | Function | Terminal Type ID | Option |
|---|---|---|---|---|---|---|
| 1 | 0.35 | GY | 5839 | Left Auxiliary Audio Signal (2) | I | - |
| 2 | 0.35 | L-GN | 5841 | Right Auxiliary Audio Signal (2) | I | - |
| 3 | 0.35 | VT | 5843 | Auxiliary Audio Common Signal | I | - |
| 4 | 0.35 | BK | 2550 | Ground | I | - |
| 5 | 0.35 | L-BU | 2060 | Auxiliary Detection Signal | I | - |
| 6 | 0.75 | RD/VT | 340 | Battery Positive Voltage | I | - |

## X83 Auxiliary Audio Input X2 (D09)

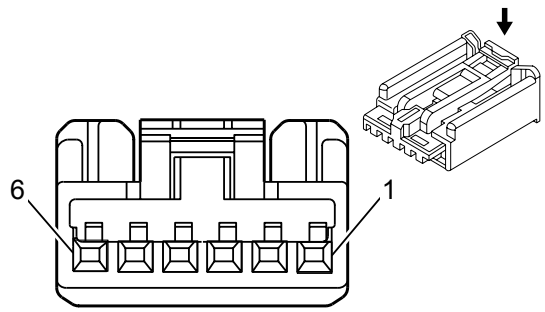


### Connector Part Information

Harness Type: Center Seat

OEM Connector: 15269798

Service Connector: 19167753

Description: 6-Way F 0.64 Kaizen Series (BK)

### *Terminal Part Information*

| Terminal Type ID | Terminated Lead | Diagnostic Test Probe | Terminal Removal Tool | Service Terminal | Tray | Core Crimp | Insulation Crimp |
|---|---|---|---|---|---|---|---|
| I | Not Available | Not Available | Not Available | Not Available | Not Available | Not Available | Not Available |

### *X83 Auxiliary Audio Input X2 (D09)*

| Pin | Size | Color | Circuit | Function | Terminal Type ID | Option |
|---|---|---|---|---|---|---|
| 1 | 0.35 | BK | | | I | - |
| 2-6 | - | - | - | Not Occupied | - | - |

## X84 Data Link Connector

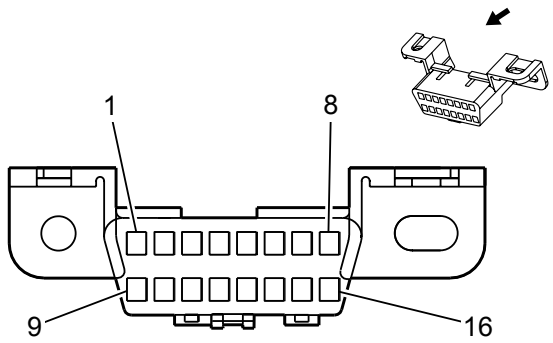


### Connector Part Information

Harness Type: Instrument Panel

OEM Connector: 12110250

Service Connector: 12110250

Description: 16-Way F 150 Metri Pack Series (BK)

### *Terminal Part Information*

| Terminal Type ID | Terminated Lead | Diagnostic Test Probe | Terminal Removal Tool | Service Terminal | Tray | Core Crimp | Insulation Crimp |
|---|---|---|---|---|---|---|---|
| I | 13327107 | J-35616-14 (GN) | J-38125-12A | 12129484 | 19 | E | C |
| II | Pending | J-35616-14 (GN) | J-38125-12A | 12129484 | 19 | E | A |

### *X84 Data Link Connector*

| Pin | Size | Color | Circuit | Function | Terminal Type ID | Option |
|---|---|---|---|---|---|---|
| 1 | 0.5 | L-GN | 5060 | Low Speed GMLAN Serial Data | I | - |
| 2-3 | - | - | - | Not Occupied | - | - |
| 4 | 0.5 | BK | 1050 | Ground | I | - |
| 5 | 0.75 | BK/WH | 1851 | Signal Ground | II | - |
| 6 | 0.5 | D-BU | 2500 | High Speed GMLAN Serial Data (+) (1) | I | - |
| 7-11 | - | - | - | Not Occupied | - | - |
| 12 | 0.5 | D-BU/YE | 6105 | High Speed GMLAN Serial Data (+) (2) | I | - |
| 13 | 0.5 | WH | 6106 | High Speed GMLAN Serial Data (-) (2) | I | - |
| 14 | 0.5 | WH | 2501 | High Speed GMLAN Serial Data (-) (1) | I | - |
| 15 | - | - | - | Not Occupied | - | - |
| 16 | 0.5 | RD/WH | 640 | Battery Positive Voltage | I | - |

## X85 Steering Wheel Air Bag Coil

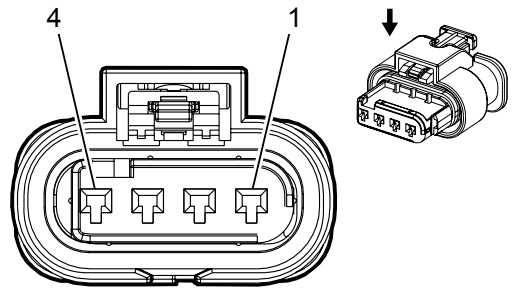


### Connector Part Information

Harness Type: Body

OEM Connector: 13854531

Service Connector: 13586137

Description: 4-Way F 1.2 Series, Sealed (YE)

### *Terminal Part Information*

| Terminal Type ID | Terminated Lead | Diagnostic Test Probe | Terminal Removal Tool | Service Terminal | Tray | Core Crimp | Insulation Crimp |
|---|---|---|---|---|---|---|---|
| I | Pending | J-35616-16 (L-GN) | J-38125-22 | Not Available | Not Available | Not Available | Not Available |

### *X85 Steering Wheel Air Bag Coil*

| Pin | Size | Color | Circuit | Function | Terminal Type ID | Option |
|---|---|---|---|---|---|---|
| 1 | 0.35 | OG/VT | 3021 | Steering Wheel Module Stage 1 High Control | I | - |
| 2 | 0.35 | BN/OG | 3020 | Steering Wheel Module Stage 1 Low Control | I | - |
| 3 | 0.35 | OG/L-GN | 3023 | Steering Wheel Module Stage 2 High Control | I | - |
| 4 | 0.35 | WH/OG | 3022 | Steering Wheel Module Stage 2 Low Control | I | - |

## X85 Steering Wheel Air Bag Coil X1

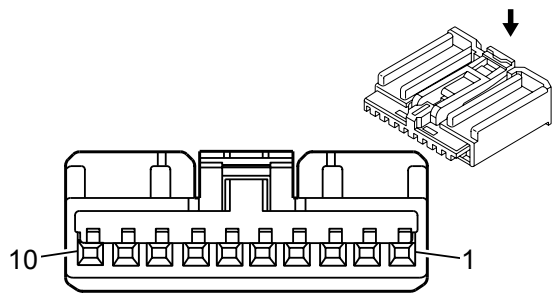


### Connector Part Information

Harness Type:

OEM Connector: AIT2PB-10-1AK

Service Connector: 13576634

Description: 10 F 0.64 Kaizen Series (BK)

### *Terminal Part Information*

| Terminal Type ID | Terminated Lead | Diagnostic Test Probe | Terminal Removal Tool | Service Terminal | Tray | Core Crimp | Insulation Crimp |
|---|---|---|---|---|---|---|---|
| I | Not Available | Not Available | Not Available | Not Available | Not Available | Not Available | Not Available |

### *X85 Steering Wheel Air Bag Coil X1*

| Pin | Size | Color | Circuit | Function | Terminal Type ID | Option |
|---|---|---|---|---|---|---|
| 1 | 0.5 | RD/YE | 3040 | Battery Positive Voltage | I | - |
| 2 | 0.5 | GN | 3894 | Local Interconnect Network Bus 12 | I | - |
| 3 | - | - | - | Not Occupied | - | - |
| 4 | 0.5 | GY/OG | 5737 | Adaptive Cruise Control Gap Up/Down Switch Signal | I | - |
| 5 | 0.5 | YE | 6136 | Supply Voltage | I | - |
| 6 | 0.5 | WH | 1444 | 12 Volt Reference | I | - |
| 7 | - | - | - | Not Occupied | - | - |
| 8 | 0.5 | BN/YE | 1884 | Cruise Control Set/Coast/Resume/Accelerate Switch Signal | I | - |
| 9 | 0.5 | BK | 1050 | Ground | I | - |
| 10 | 0.5 | GN/WH | 3287 | Horn Switch Signal | I | - |

## X85 Steering Wheel Air Bag Coil X2

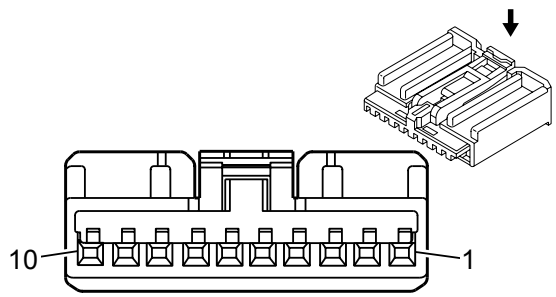


### Connector Part Information

Harness Type:

OEM Connector: AIT2PB-10-1AK

Service Connector: 13576634

Description: 10 F 0.64 Kaizen Series (BK)

### *Terminal Part Information*

| Terminal Type ID | Terminated Lead | Diagnostic Test Probe | Terminal Removal Tool | Service Terminal | Tray | Core Crimp | Insulation Crimp |
|---|---|---|---|---|---|---|---|
| I | 13575867 | J-35616-64B (L-BU) | J-38125-215A | SAIT-A03T-M064 | 14 | P | P |

### *X85 Steering Wheel Air Bag Coil X2*

| Pin | Size | Color | Circuit | Function | Terminal Type ID | Option |
|---|---|---|---|---|---|---|
| 1 | 0.5 | RD | 3040 | Battery Positive Voltage | I | - |
| 2 | 0.5 | GN | 3894 | Local Interconnect Network Bus 12 | I | - |
| 3 | 0.5 | BN/YE | 1884 | Cruise Control Set/Coast/Resume/Accelerate Switch Signal | I | - |
| 4 | 0.5 | GY/OG | 5737 | Adaptive Cruise Control Gap Up/Down Switch Signal | I | - |
| 5 | 0.5 | YE | 6136 | Supply Voltage | I | - |
| 6 | 0.5 | WH | 1444 | 12 Volt Reference | I | - |
| 7 | 0.5 | GY/OG | 5737 | Adaptive Cruise Control Gap Up/Down Switch Signal | I | - |
| 8 | 0.5 | BN/YE | 1884 | Cruise Control Set/Coast/Resume/Accelerate Switch Signal | I | - |
| 9 | 0.5 | BK | 1050 | Ground | I | - |
| 10 | 0.5 | GN/WH | 3287 | Horn Switch Signal | I | - |

## X85 Steering Wheel Air Bag Coil X3

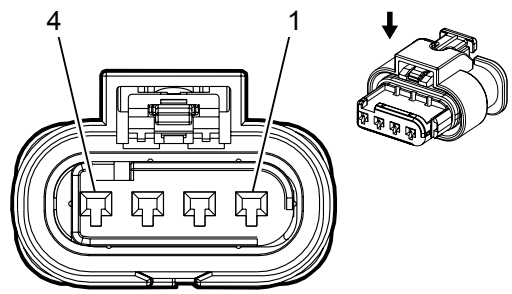


### Connector Part Information

Harness Type: Body

OEM Connector: 13854531

Service Connector: 13586137

Description: 4-Way F 1.2 Series, Sealed (YE)

### *Terminal Part Information*

| Terminal Type ID | Terminated Lead | Diagnostic Test Probe | Terminal Removal Tool | Service Terminal | Tray | Core Crimp | Insulation Crimp |
|---|---|---|---|---|---|---|---|
| I | Not Available | J-35616-16 (L-GN) | J-38125-22 | Not Available | Not Available | Not Available | Not Available |

### *X85 Steering Wheel Air Bag Coil X3*

| Pin | Size | Color | Circuit | Function | Terminal Type ID | Option |
|---|---|---|---|---|---|---|
| 1 | 0.35 | OG/VT | 3021 | Steering Wheel Module Stage 1 High Control | I | - |
| 2 | 0.35 | BN/OG | 3020 | Steering Wheel Module Stage 1 Low Control | I | - |
| 3 | 0.35 | OG/L-GN | 3023 | Steering Wheel Module Stage 2 High Control | I | - |
| 4 | 0.35 | WH/OG | 3022 | Steering Wheel Module Stage 2 Low Control | I | - |

## X85 Steering Wheel Air Bag Coil X4

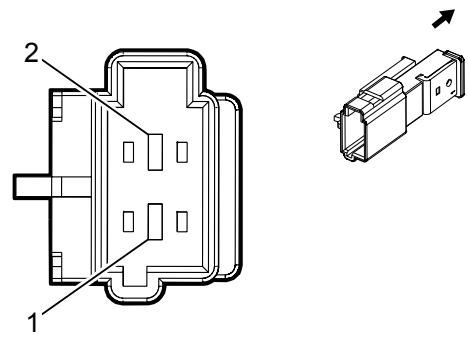


### Connector Part Information

Harness Type:

OEM Connector: 1563190-1

Service Connector: 13574780

Description: 2 M 1.6 Timer Series (BK)

### *Terminal Part Information*

| Terminal Type ID | Terminated Lead | Diagnostic Test Probe | Terminal Removal Tool | Service Terminal | Tray | Core Crimp | Insulation Crimp |
|---|---|---|---|---|---|---|---|
| I | Not Available | Not Available | Not Available | Not Available | Not Available | Not Available | Not Available |

### *X85 Steering Wheel Air Bag Coil X4*

| Pin | Size | Color | Circuit | Function | Terminal Type ID | Option |
|---|---|---|---|---|---|---|
| 1 | 0.5 | VT/WH | 1139 | Run/Crank Ignition 1 Voltage | I | - |
| 2 | 0.5 | BK | 1050 | Ground | I | - |

## X85 Steering Wheel Air Bag Coil X5

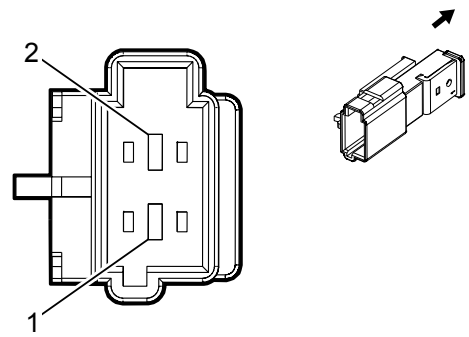


### Connector Part Information

Harness Type:

OEM Connector: 1563190-1

Service Connector: 13574780

Description: 2 M 1.6 Timer Series (BK)

### *Terminal Part Information*

| Terminal Type ID | Terminated Lead | Diagnostic Test Probe | Terminal Removal Tool | Service Terminal | Tray | Core Crimp | Insulation Crimp |
|---|---|---|---|---|---|---|---|
| I | Not Available | Not Available | Not Available | Not Available | Not Available | Not Available | Not Available |

### *X85 Steering Wheel Air Bag Coil X5*

| Pin | Size | Color | Circuit | Function | Terminal Type ID | Option |
|---|---|---|---|---|---|---|
| 1 | 0.5 | VT/WH | 1139 | Run/Crank Ignition 1 Voltage | I | - |
| 2 | 0.5 | BK | 1050 | Ground | I | - |

## X88 Trailer Connector

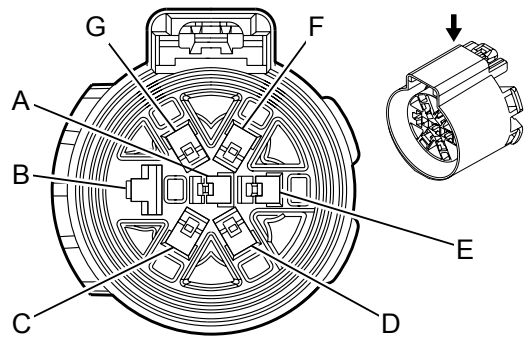


### Connector Part Information

Harness Type: Backup Alarm

OEM Connector: 13857223

Service Connector: 13583927

Description: 7-Way F 280 Metri Pack, 630 Series, Sealed (BK)

Harness Type: Camper Accessory Jumper

OEM Connector: 13857223

Service Connector: 13583927

Description: 7-Way F 280 Metri Pack, 630 Series, Sealed (BK)

Harness Type: Chassis

OEM Connector: 13857223

Service Connector: 13583927

Description: 7-Way F 280 Metri Pack, 630 Series, Sealed (BK)

### *Terminal Part Information*

| Terminal Type ID | Terminated Lead | Diagnostic Test Probe | Terminal Removal Tool | Service Terminal | Tray | Core Crimp | Insulation Crimp |
|---|---|---|---|---|---|---|---|
| I | Pending | J-35616-4A (PU) | J-38125-553 | 12110847 | 4 | C | 5 |
| II | Pending | J-35616-42 (RD) | J-38125-11A | 15305232 | 23 | B | 3 |
| III | Pending | J-35616-4A (PU) | J-38125-553 | 12110845 | 4 | F | 5 |
| IV | Pending | J-35616-42 (RD) | J-38125-11A | 15305232 | 23 | Not Available | Not Available |
| V | Pending | J-35616-4A (PU) | J-38125-553 | 12110853 | 4 | F | 5 |
| VI | Pending | J-35616-4A (PU) | J-38125-553 | 12110845 | 4 | Not Available | Not Available |

### *X88 Trailer Connector*

| Pin | Size | Color | Circuit | Function | Terminal Type ID | Option |
|---|---|---|---|---|---|---|
| A | 1 | L-GN | 1624 | Trailer Backup Lamp Supply Voltage | I | - |
| | 0.75 | WH/L-GN | 1624 | Trailer Backup Lamp Supply Voltage | | |
| B | 5 | WH | 22 | Trailer Ground | II | - |
| | 6 | WH | 22 | Trailer Ground | | |
| C | 3 | D-BU | 47 | Trailer Auxiliary Supply Voltage | V | - |
| | 2.5 | D-BU | 47 | Trailer Auxiliary Supply Voltage | | |
| D | 0.8 | D-GN | 1619 | Right Rear Trailer Stop/Turn Lamp Supply Voltage | I | - |

| | | | | | | |
|---|---|---|---|---|---|---|
| D | 0.8<br>0.75 | D-GN<br>L-GN/VT | 1619<br>1619 | Right Rear Trailer Stop/Turn Lamp Supply Voltage<br>Right Rear Trailer Stop/Turn Lamp Supply Voltage | I | - |
| E | 3<br>4 | RD/BK<br>RD/L-GN | 742<br>742 | Battery Positive Voltage<br>Battery Positive Voltage | V | - |
| F | 1<br>1.5 | BN<br>GY/BN | 2109<br>2109 | Trailer Park Lamp Supply Voltage<br>Trailer Park Lamp Supply Voltage | I | - |
| G | 0.8<br>0.75 | YE<br>YE/GY | 1618<br>1618 | Left Rear Trailer Stop/Turn Lamp Supply Voltage<br>Left Rear Trailer Stop/Turn Lamp Supply Voltage | I | - |

## X92 USB Receptacle

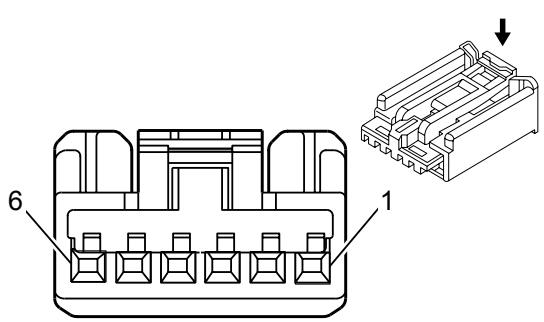


### Connector Part Information

Harness Type: Instrument Panel

OEM Connector: 13595476

Service Connector: 19167753

Description: 6-Way F 0.64 Kaizen Series (BK)

### *Terminal Part Information*

| Terminal Type ID | Terminated Lead | Diagnostic Test Probe | Terminal Removal Tool | Service Terminal | Tray | Core Crimp | Insulation Crimp |
|---|---|---|---|---|---|---|---|
| I | 13327120 | J-35616-64B (L-BU) | J-38125-215A | SAIT-A03T-M064 | 14 | P | P |
| II | Not Available | J-35616-64B (L-BU) | J-38125-215A | Not Available | Not Available | Not Available | Not Available |

### *X92 USB Receptacle*

| Pin | Size | Color | Circuit | Function | Terminal Type ID | Option |
|---|---|---|---|---|---|---|
| 1-3 | - | - | - | Not Occupied | - | - |
| 4 | 0.35 | BK | 2550 | Ground | I | - |
| 5 | - | - | - | Not Occupied | - | - |
| 6 | 0.75 | RD/VT | 340 | Battery Positive Voltage | II | - |

## Splice Pack Connector End Views

### JX200 Splice Pack - Instrument Panel

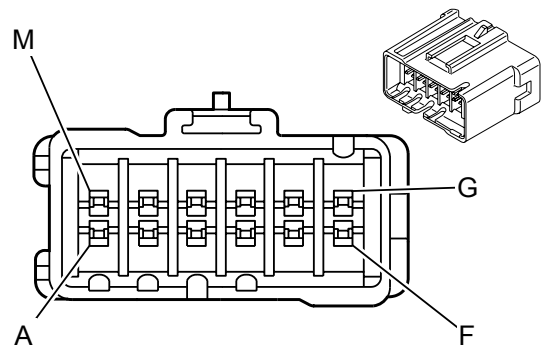


### Connector Part Information

Harness Type: Instrument Panel

OEM Connector: 15305291

Service Connector: 15305291

Description: 12-Way F 280 Metri Pack Series (BK)

### *Terminal Part Information*

| Terminal Type ID | Terminated Lead | Diagnostic Test Probe | Terminal Removal Tool | Service Terminal | Tray | Core Crimp | Insulation Crimp |
|---|---|---|---|---|---|---|---|
| I | 13581349 | J-35616-4A (PU) | J-38125-553 | 12110844 | 4 | E | A |
| II | 13581349 | J-35616-4A (PU) | J-38125-553 | 12110844 | 4 | E | 4 |

### *JX200 Splice Pack - Instrument Panel*

| Pin | Size | Color | Circuit | Function | Terminal Type ID | Option |
|---|---|---|---|---|---|---|
| A | 0.5 | L-GN | 5060 | Low Speed GMLAN Serial Data | I | - |
| B-C | - | - | - | Not Occupied | - | - |
| D | 0.5 | L-GN | 5060 | Low Speed GMLAN Serial Data | I | - |
| E | 0.35 | L-GN | 5060 | Low Speed GMLAN Serial Data | II | - |
| F | - | - | - | Not Occupied | - | - |
| G | 0.5 | L-GN | 5060 | Low Speed GMLAN Serial Data | I | - |
| H | 0.5 | L-GN | 5060 | Low Speed GMLAN Serial Data | I | - |
| J | 0.5 | L-GN | 5060 | Low Speed GMLAN Serial Data | I | - |
| K | 0.35 | L-GN | 5060 | Low Speed GMLAN Serial Data | II | - |
| L | - | - | - | Not Occupied | - | - |
| M | 0.5 | L-GN | 5060 | Low Speed GMLAN Serial Data | I | - |

## JX300 Splice Pack - Body

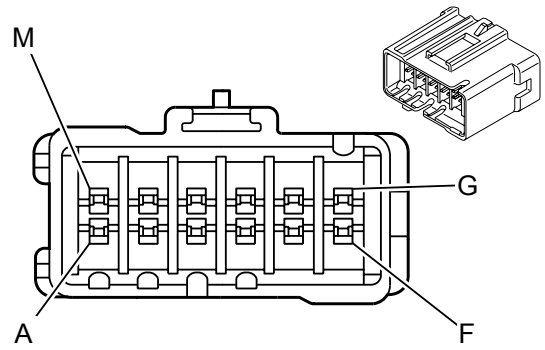


### Connector Part Information

Harness Type: Body

OEM Connector: 15305291

Service Connector: 15305291

Description: 12-Way F 280 Metri Pack Series (BK)

### *Terminal Part Information*

| Terminal Type ID | Terminated Lead | Diagnostic Test Probe | Terminal Removal Tool | Service Terminal | Tray | Core Crimp | Insulation Crimp |
|---|---|---|---|---|---|---|---|
| I | 13581349 | J-35616-4A (PU) | J-38125-553 | 12110844 | 4 | E | A |
| II | 13581349 | J-35616-4A (PU) | J-38125-553 | 12110844 | 4 | E | 4 |
| III | Pending | J-35616-4A (PU) | J-38125-553 | 12110844 | 4 | C | A |

### *JX300 Splice Pack - Body*

| Pin | Size | Color | Circuit | Function | Terminal Type ID | Option |
|---|---|---|---|---|---|---|
| A | 0.5 | L-GN | 5060 | Low Speed GMLAN Serial Data | I | - |
| B-C | - | - | - | Not Occupied | - | - |
| D | 0.35 | L-GN | 5060 | Low Speed GMLAN Serial Data | II | - |
| E | - | - | - | Not Occupied | - | - |
| F | 0.35 | L-GN | 5060 | Low Speed GMLAN Serial Data | II | - |
| G | 0.75 | L-GN | 5060 | Low Speed GMLAN Serial Data | III | - |
| H | - | - | - | Not Occupied | - | - |
| J | 0.5 | L-GN | 5060 | Low Speed GMLAN Serial Data | I | - |
| K | 0.5 | L-GN | 5060 | Low Speed GMLAN Serial Data | I | - |
| L | 0.5 | L-GN | 5060 | Low Speed GMLAN Serial Data | I | - |
| M | 0.5 | L-GN | 5060 | Low Speed GMLAN Serial Data | I | - |

## Inline Harness Connector End Views

## X100 Front Bumper Harness to Forward Lamp Harness

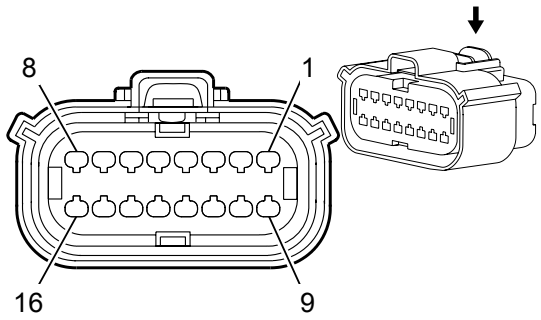


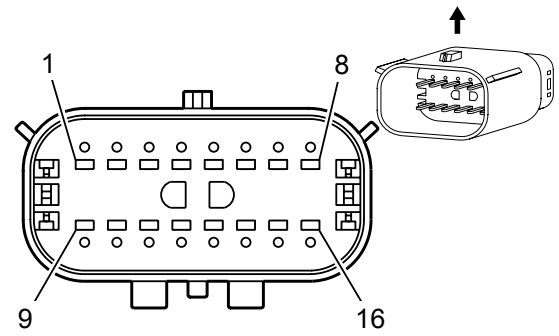


### Connector Part Information

Harness Type: Forward Lamp

OEM Connector: 13778557

Service Connector: 13584788

Description: 16-Way F 1.5 Series, Sealed (BK)

### Connector Part Information

Harness Type: Front Bumper

OEM Connector: 13551665

Service Connector: 19300393

Description: 16-Way M 150 MX Series, Sealed (BK)

### *Terminal Part Information*

| Terminal Type ID | Terminated Lead | Diagnostic Test Probe | Terminal Removal Tool | Service Terminal | Tray | Core Crimp | Insulation Crimp |
|---|---|---|---|---|---|---|---|
| I | Pending | J-35616-14 (GN) | J-38125-217 | Not Available | Not Available | A/E | A/C |
| II | Pending | J-35616-14 (GN) | J-38125-217 | Not Available | Not Available | E | 2 |
| III | Pending | J-35616-3 (GY) | J-38125-217 | Not Available | Not Available | Not Available | Not Available |

### *X100 Front Bumper Harness to Forward Lamp Harness*

| Pin | Size | Color | Circuit | Terminal Type ID | Option | Function | Pin | Size | Color | Circuit | Terminal Type ID | Option |
|---|---|---|---|---|---|---|---|---|---|---|---|---|
| 1 | 1 | BK | 150 | I | - | Ground | 1 | 0.5 | BK | 150 | III | - |
| 2 | 1 | BK | 250 | I | - | Ground | 2 | 0.5 | BK | 250 | III | - |
| 3 | 0.5 | BN/VT | 2234 | II | - | Front Fog Lamp Supply Voltage | 3 | 0.5 | BN/VT | 2234 | III | - |
| 4 | 0.5 | YE/VT | 5213 | II | - | Front Parking Left/Right/Mid Sensor | 4 | 0.5 | YE/L-GN | 5213 | III | - |
| 5 | 0.5 | VT/WH | 5215 | II | - | Front Parking Left Corner Sensor | 5 | 0.5 | VT/WH | 5215 | III | - |
| 6 | 0.5 | YE/GY | 5216 | II | - | Front Parking Left Mid Sensor | 6 | 0.5 | YE/GY | 5216 | III | - |
| 7 | 0.5 | WH/GY | 5217 | II | - | Front Parking Right Corner Sensor | 7 | 0.5 | WH/GY | 5217 | III | - |
| 8-9 | - | - | - | - | - | Not Occupied | 8-9 | - | - | - | - | - |
| 10 | 0.5 | VT/GY | 5218 | II | - | Front Parking Right Mid Sensor | 10 | 0.5 | VT/GY | 5218 | III | - |
| 11 | 0.5 | BK/D-BU | 5214 | II | - | Front Parking Sensor Low Reference | 11 | 0.5 | BK/D-BU | 5214 | III | - |

| | | | | | | | | | | | | |
|---|---|---|---|---|---|---|---|---|---|---|---|---|
| | | | | | | Low Reference | | | | | | |
| 12-16 | - | - | - | - | - | Not Occupied | 12-16 | - | - | - | - | - |

## X101 Engine Harness to Engine Harness

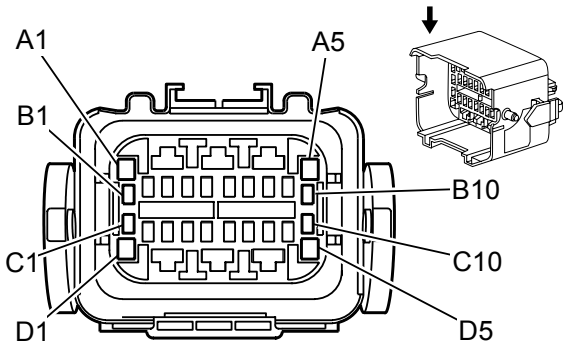


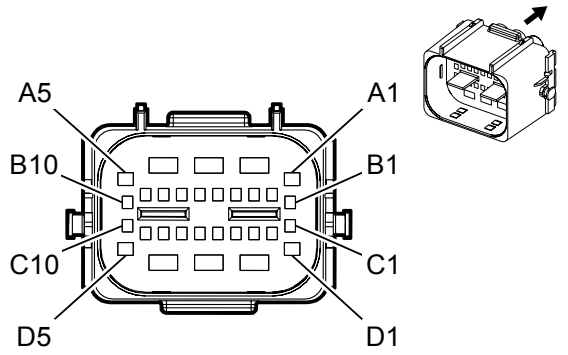


### Connector Part Information

Harness Type: Engine

OEM Connector: 15355480

Service Connector: 19181242

Description: 30-Way F 150 GT Series, Sealed (BK)

### Connector Part Information

Harness Type: Engine

OEM Connector: 15450510

Service Connector: 89046785

Description: 30-Way M 150 280 630 Metri Pack Series, Sealed (BK)

### *Terminal Part Information*

| Terminal Type ID | Terminated Lead | Diagnostic Test Probe | Terminal Removal Tool | Service Terminal | Tray | Core Crimp | Insulation Crimp |
|---|---|---|---|---|---|---|---|
| I | 13575392 | J-35616-4A (PU) | J-38125-553 | 15304720 | 19 | 4 | 5 |
| II | Pending | J-35616-42 (RD) | J-38125-11A | 15305232 | 23 | B/4 | 3 |
| III | 13578879 | J-35616-2A (GY) | J-38125-553 | 12191819 | 8 | C | 1 |
| IV | 13575298 | J-35616-2A (GY) | J-38125-553 | 12191819 | 8 | E | 1 |
| V | 13575412 | J-35616-2A (GY) | J-38125-553 | 12191819 | 8 | 2 | 1 |
| VI | 13576358 | J-35616-5 (PU) | J-38125-553 | 15304732 | 8 | Not Available | Not Available |
| VII | Pending | J-35616-43 (RD) | J-38125-11A | 12064734 | 8 | Not Available | Not Available |
| VIII | Pending | J-35616-3 (GY) | J-38125-560 | Not Available | Not Available | Not Available | Not Available |

### *X101 Engine Harness to Engine Harness*

| Pin | Size | Color | Circuit | Terminal Type ID | Option | Function | Pin | Size | Color | Circuit | Terminal Type ID | Option |
|---|---|---|---|---|---|---|---|---|---|---|---|---|
| A1 | 1.5 | WH/BN | 3677 | I | - | DEF Resevoir Heater Control | A1 | 2 | OG/WH | 3677 | VI | LML |
| A3 | 0.75 | YE/D-BU | 3680 | II | - | Charge Air Cooler Outlet Temperature Sensor Return | A3 | 0 | | 3680 | VII | LML |
| A4 | 0.75 | BN | 3681 | II | - | Charge Air Cooler Outlet Temperature Sensor Signal | A4 | 0 | BR | 3681 | VII | LML |
| A5 | 1.5 | GY/WH | 3675 | I | - | DEF Pump Heater Control | A5 | 2 | VT/WH | 3199 | VI | LML |
| B1 | 1.5 | VT/D-BU | 3674 | III | - | Nox Sensor (1) Signal Voltage | B1 | 0 | VT | 3674 | VIII | LML |

| | | | | | | | | | | | |
|---|---|---|---|---|---|---|---|---|---|---|---|
| | | | | | | Voltage | | | | | |
| B2 | 0.5 | D-BU | 2500 | IV | - | High Speed GMLAN Serial Data (+) (1) | B2 | 0 | BK | 2500 | VIII | LML |
| B3 | 0.5 | VT/YE | 5985 | IV | - | Accessory Wakeup Serial Data | B3 | 0 | BU | 5985 | VIII | LML |
| B4 | 0.5 | VT/BK | 2139 | IV | - | Run/Crank Ignition 1 Voltage | B4 | 0 | PK | 2139 | VIII | LML |
| B5 | 0.5 | L-GN/GY | 465 | IV | - | Fuel Pump Primary Relay Control | B5 | 0 | L-GN | 497 | VIII | LML |
| B6 | 0.5 | WH/L-GN | 6142 | IV | - | Power Take Off Engine Shutdown Signal | B6 | 0 | GN/WH | 6142 | VIII | LML |
| B8 | 0.5 | BK/BN | 5360 | IV | - | Brake Apply Sensor Low Reference | B8 | 0 | BR/WH | 5360 | VIII | LML |
| B9 | 0.5 | D-BU | 2500 | IV | - | High Speed GMLAN Serial Data (+) (1) | B9 | 0 | BK | 2500 | VIII | LML |
| B10 | 1.5 | GY | 3672 | III | - | Nox Sensor (2) Supply Voltage | B10 | 0 | GY | 3672 | VIII | LML |
| C1 | 1.5 | BK/D-BU | 3673 | III | - | Nox Sensor (1) Ground | C1 | 0 | | 3673 | VIII | LML |
| C2 | 0.5 | WH | 2501 | IV | - | High Speed GMLAN Serial Data (-) (1) | C2 | 0 | | 2501 | VIII | LML |
| C3 | 0.5 | BN/D-BU | 2926 | IV | - | Hydrocarbon Injector High Control | C3 | 0 | BU | 2926 | VIII | LML |
| C4 | 0.5 | VT/BN | 2927 | IV | - | Hydrocarbon Injector Low Control | C4 | 0 | VT | 2927 | VIII | LML |
| C6 | 0.5 | D-BU/WH | 1937 | IV | - | Secondary Fuel Level Sensor Signal | C6 | 0 | L-BU | 1937 | VIII | LML |
| C7 | 0.5 | WH | 5359 | IV | - | Brake Apply Sensor Supply Voltage | C7 | 0 | WH | 5359 | VIII | LML |
| C8 | 0.5 | D-BU/YE | 5361 | IV | - | Brake Apply Sensor Signal | C8 | 0 | YE | 5361 | VIII | LML |
| C9 | 0.5 | WH | 2501 | IV | - | High Speed GMLAN Serial Data (-) (1) | C9 | 0 | | 2501 | VIII | LML |
| C10 | 1.5 | BK/GY | 3671 | III | - | Nox Sensor (2) Ground | C10 | 0 | BK | 3671 | VIII | LML |
| D1 | 1.5 | VT/WH | 3676 | I | - | DEF Heating Tank (2) Heater Control | D1 | 2 | GY/WH | 3675 | VI | LML |
| D2 | 0.75 | GY/D-BU | 7564 | II | - | Humidity Sensor Signal | D2 | 0 | L-BU | 7564 | VII | LML |
| E- | - | - | - | - | - | Not Occupied | E- | - | - | - | - | - |

## X105 Engine Harness to Forward Lamp Harness

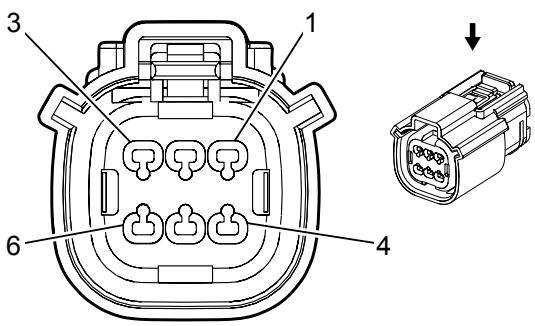


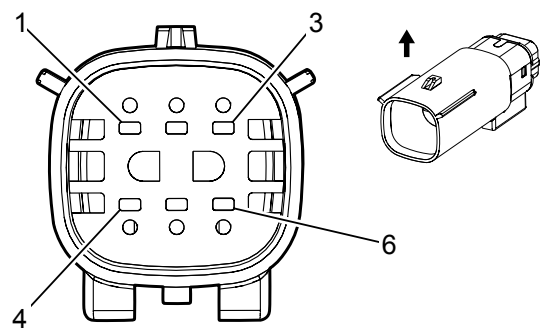


### Connector Part Information

Harness Type: Engine

OEM Connector: 13609714

Service Connector: 13585853

Description: 6-Way F 150 MX Series, Sealed (BK)

### Connector Part Information

Harness Type: Forward Lamp

OEM Connector: 15457002

Service Connector: Not Available

Description: 6-Way M 150 MX Series, Sealed (BK)

### *Terminal Part Information*

| Terminal Type ID | Terminated Lead | Diagnostic Test Probe | Terminal Removal Tool | Service Terminal | Tray | Core Crimp | Insulation Crimp |
|---|---|---|---|---|---|---|---|
| I | Not Available | J-35616-14 (GN) | J-38125-217 | Not Available | Not Available | E | 2 |
| II | Not Available | J-35616-14 (GN) | J-38125-217 | Not Available | Not Available | Not Available | Not Available |

### *X105 Engine Harness to Forward Lamp Harness*

| Pin | Size | Color | Circuit | Terminal Type ID | Option | Function | Pin | Size | Color | Circuit | Terminal Type ID | Option |
|---|---|---|---|---|---|---|---|---|---|---|---|---|
| 1 | 0.5 | BN/YE | 473 | I | - | High Speed Cooling Fan Relay Control | 1 | 0.5 | BN/YE | 473 | II | - |
| 2 | 0.5 | BK/D-BU | 61 | I | - | Outside Ambient Temperature Sensor Low Reference | 2 | 0.5 | BK/D-BU | 61 | II | - |
| 3 | 0.5 | D-BU/GY | 636 | I | - | Outside Ambient Air Temperature Sensor Signal | 3 | 0.5 | D-BU/GY | 636 | II | - |
| 4-6 | - | - | - | - | - | Not Occupied | 4-6 | - | - | - | - | - |

## X110 Forward Lamp Harness to Left Headlamp

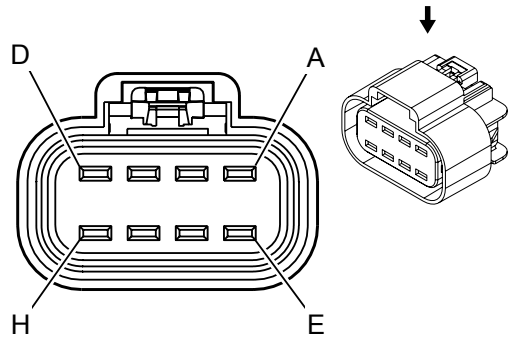


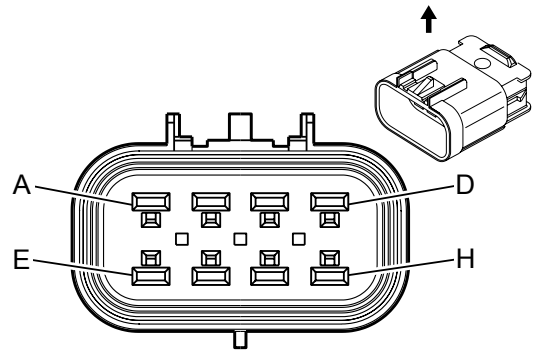


### Connector Part Information

Harness Type: Forward Lamp

OEM Connector: 15326654

Service Connector: SEE NOTE

Description: 8-Way F 280 GT 5.8 Series, Sealed (BK)

### Connector Part Information

Harness Type:

OEM Connector: EEM0286

Service Connector: Service by Harness – See Part Catalog

Description: 8 M 280 GT 5.8 Series, Sealed (BK)

### *Terminal Part Information*

| Terminal Type ID | Terminated Lead | Diagnostic Test Probe | Terminal Removal Tool | Service Terminal | Tray | Core Crimp | Insulation Crimp |
|---|---|---|---|---|---|---|---|
| I | 13575392 | J-35616-4A (PU) | J-38125-553 | 15304720 | 19 | 4 | 5 |
| II | 13576356 | J-35616-4A (PU) | J-38125-553 | 15304719 | 19 | 2 | 5 |
| III | 13576356 | J-35616-4A (PU) | J-38125-553 | 15304719 | 19 | E | 5 |
| IV | Not Available | Not Available | Not Available | Not Available | Not Available | Not Available | Not Available |

### *X110 Forward Lamp Harness to Left Headlamp*

| Pin | Size | Color | Circuit | Terminal Type ID | Option | Function | Pin | Size | Color | Circuit | Terminal Type ID | Option |
|---|---|---|---|---|---|---|---|---|---|---|---|---|
| A | 1.5 | BK | 150 | I | - | Ground | A | 0.5 | BK | 150 | IV | - |
| B | 0.75 | YE | 712 | II | - | Left Headlamp Low Beam Supply Voltage | B | 0.5 | RD | 712 | IV | - |
| C | 0.5 | WH | 711 | III | - | Left Headlamp High Beam Supply Voltage | C | 0.5 | BU | 711 | IV | - |
| D | - | - | - | - | - | Not Occupied | D | - | - | - | - | - |
| E | 0.5 | VT/GY | 709 | III | - | Left Park Lamp Supply Voltage | E | 0.5 | VT/GY | 709 | IV | - |
| F | 0.75 | D-BU/WH | 1314 | II | - | Left Front Turn Signal Lamp Supply Voltage | F | 0.5 | D-BU | 1314 | IV | - |
| G | 0.75 | GY/D-BU | 7538 | II | - | Left Front DRL Supply Voltage | G | 0.5 | BN | 7538 | IV | - |
| H | 0.5 | VT/GY | 709 | III | - | Left Park Lamp Supply Voltage | H | 0.5 | WH | 709 | IV | - |

## X111 Engine Harness to Front Axle Harness

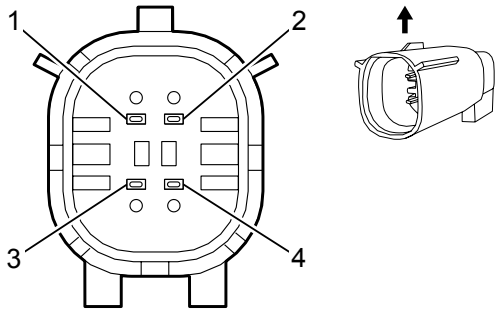


### Connector Part Information

Harness Type: Engine

OEM Connector: 13586625

Service Connector: Not Available

Description: 4-Way M 150 MX Series, Sealed (BK)

### Connector Part Information

Harness Type: Front Axle

OEM Connector: 13872556

Service Connector: Service by Harness - See Part Catalog

Description:

### *Terminal Part Information*

| Terminal Type ID | Terminated Lead | Diagnostic Test Probe | Terminal Removal Tool | Service Terminal | Tray | Core Crimp | Insulation Crimp |
|---|---|---|---|---|---|---|---|
| I | Not Available | J-35616-14 (GN) | J-38125-217 | Not Available | Not Available | Not Available | Not Available |
| II | Not Available | J-35616-3 (GY) | J-38125-560 | Not Available | Not Available | Not Available | Not Available |
| III | Not Available | J-35616-3 (GY) | J-38125-217 | Not Available | Not Available | Not Available | Not Available |
| IV | Not Available | J-35616-14 (GN) | J-38125-217 | Not Available | Not Available | E | 2 |

### *X111 Engine Harness to Front Axle Harness*

| Pin | Size | Color | Circuit | Terminal Type ID | Option | Function | Pin | Size | Color | Circuit | Terminal Type ID | Option |
|---|---|---|---|---|---|---|---|---|---|---|---|---|
| 1 | | | | | | | 1 | 0.5 | YE/WH | 1695 | I | - |
| 2 | | | | | | | 2 | 0.5 | GY/BK | 1570 | I | - |
| 3 | | | | | | | 3 | 0.5 | VT/BK | 2139 | I | - |
| 4 | | | | | | | 4 | 1 | BK | 550 | II | - |

## X115 Engine Harness to Body Harness

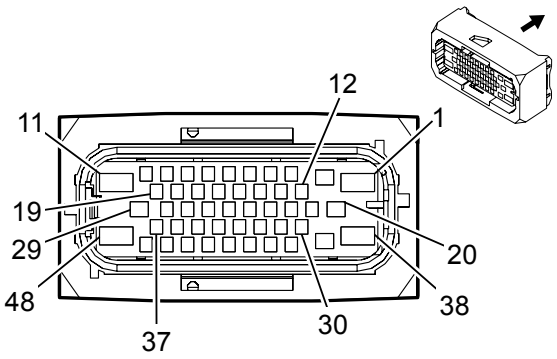


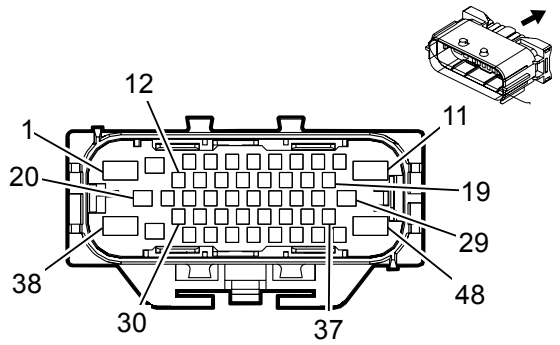


### Connector Part Information

Harness Type: Engine

OEM Connector: 13937450

Service Connector: 13586844

Description: 48-Way F 1.5 MCP, 2.8 JPT, 6.3 MCP Series, Sealed (GY)

### Connector Part Information

Harness Type: Body

OEM Connector: 13937617

Service Connector: 13586850

Description: 48-Way M 1.6, 2.8, 5.8 Series, Sealed (GY)

### *Terminal Part Information*

| Terminal Type ID | Terminated Lead | Diagnostic Test Probe | Terminal Removal Tool | Service Terminal | Tray | Core Crimp | Insulation Crimp |
|---|---|---|---|---|---|---|---|
| I | Pending | J-35616-64B (L-BU) | J-38125-215A | Not Available | Not Available | Not Available | Not Available |
| II | Pending | J-35616-42 (RD) | J-38125-11A | Not Available | Not Available | Not Available | Not Available |
| III | Pending | Pending | Pending | Not Available | Not Available | Not Available | Not Available |
| IV | 13327156 | J-35616-35 (VT) | J-38125-36 | 4-964286-1 | 16 | E | 1 |
| V | Pending | J-35616-42 (RD) | J-38125-36 | Not Available | Not Available | Not Available | Not Available |
| VI | 13575380 | J-35616-3 (GY) | J-38125-560 | Not Available | Not Available | E | 1 |
| VII | 13578882 | J-35616-3 (GY) | J-38125-560 | Not Available | Not Available | Not Available | Not Available |
| VIII | 13580827 | J-35616-5 (PU) | J-38125-36 | 1-962915-3 | 15 | E | 1 |
| IX | 13578881 | J-35616-5 (PU) | J-38125-36 | Not Available | Not Available | C | 4 |

### *X115 Engine Harness to Body Harness*

| Pin | Size | Color | Circuit | Terminal Type ID | Option | Function | Pin | Size | Color | Circuit | Terminal Type ID | Option |
|---|---|---|---|---|---|---|---|---|---|---|---|---|
| 1 | - | - | - | - | - | Not Occupied | 1 | - | - | - | - | - |
| 2 | 0.75 | D-BU/BN | 7573 | IV | - | Electric Variable Displacement Supply | 2 | 0.5 | D-BU/BN | 7573 | VIII | - |
| 3 | 0.5 | BN/WH | 419 | III | - | Check Engine Indicator Control | 3 | 0.35 | BN/WH | 419 | VII | - |
| 4 | 0.5 | WH/D-BU | 6311 | III | - | Cruise/ETC/TCC Brake Signal | 4 | 0.35 | WH/D-BU | 6311 | VII | - |
| 5 | 0.5 | WH | 2501 | III | - | High Speed GMLAN | 5 | 0.5 | WH | 2501 | VI | - |

| | | | | | | | | | | | | |
|---|---|---|---|---|---|---|---|---|---|---|---|---|
| 6 | 0.5 | D-BU | 2500 | III | - | High Speed GMLAN Serial Data (+) (1) | 6 | 0.5 | D-BU | 2500 | VI | - |
| 7 | 0.5 | WH | 5359 | III | - | Brake Apply Sensor Supply Voltage | 7 | 0.5 | WH | 5359 | VI | - |
| 8 | 0.5 | BK/BN | 5360 | III | - | Brake Apply Sensor Low Reference | 8 | 0.5 | BK/BN | 5360 | VI | - |
| 9 | 0.5 | D-BU/YE | 5361 | III | - | Brake Apply Sensor Signal | 9 | 0.5 | D-BU/YE | 5361 | VI | - |
| 10 | 0.5 | YE/WH | 1161 | I | - | Accelerator Pedal Position Signal (1) | 10 | 0.35 | YE/WH | 1161 | III | - |
| 11 | 3 | BK | 550 | II | - | Ground | 11 | 4 | BK | 550 | V | - |
| 14 | 0.5 | YE/WH | 1695 | III | - | Four Wheel Drive Wheel Lock Indicator | 14 | 0.5 | YE/WH | 1695 | VI | - |
| 15 | 0.5 | GY/BK | 1570 | III | - | Front Axle Actuator Control | 15 | 0.5 | GY/BK | 1570 | VI | - |
| 16 | 0.5 | VT/YE | 5985 | III | - | Accessory Wakeup Serial Data | 16 | 0.35 | VT/YE | 5985 | VII | - |
| 17 | 0.5 | WH/D-BU | 5986 | III | - | Serial Data Communication Enable | 17 | 0.5 | WH/D-BU | 5986 | VI | - |
| 18 | 0.5 | WH/RD | 1164 | I | - | Accelerator Pedal Position 5 Volt Reference (1) | 18 | 0.35 | WH/RD | 1164 | III | - |
| 19 | 0.5 | BK/D-BU | 1271 | I | - | Accelerator Pedal Position Low Reference (1) | 19 | 0.35 | BK/D-BU | 1271 | III | - |
| 20 | 0.75 | D-BU/YE | 7574 | IV | - | Electric Variable Displacement Control | 20 | 0.5 | D-BU/YE | 7574 | VIII | - |
| 21 | - | - | - | - | - | Not Occupied | 21 | - | - | - | - | - |
| 22 | 0.5 | D-BU/GY | 7473 | III | - | Incremental Encoder Impulse Signal | 22 | 0.35 | D-BU/GY | 7473 | VII | - |
| 23 | 0.5 | VT | 7476 | III | - | Incremental Encoder Sensor Return | 23 | 0.35 | VT | 7476 | VII | - |
| 24 | - | - | - | - | - | Not Occupied | 24 | - | - | - | - | - |
| 25 | 0.5 | BN/RD | 1274 | I | - | Accelerator Pedal Position 5 Volt Reference (2) | 25 | 0.35 | BN/RD | 1274 | III | - |
| 26 | 0.5 | L-GN/WH | 1162 | I | - | Accelerator Pedal Position Signal (2) | 26 | 0.35 | L-GN/WH | 1162 | III | - |
| 27 | 0.5 | BK/PU | 1272 | I | - | Accelerator Pedal Position Low Reference (2) | 27 | 0.35 | BK/VT | 1272 | III | - |
| 30 | 0.5 | WH/L-GN | 7475 | III | - | Incremental Encoder Sensor (8V) Supply | 30 | 0.35 | WH/L-GN | 7475 | VII | - |

| | | | | | | | | | | | | |
|---|---|---|---|---|---|---|---|---|---|---|---|---|
| 31 | 0.5 | YE | 7474 | III | - | Incremental Encoder Direction Signal | 31 | 0.35 | YE | 7474 | VII | - |
| 35 | 0.5 | D-BU/YE | 6105 | III | - | High Speed GMLAN Serial Data (+) (2) | 35 | 0.5 | D-BU/YE | 6105 | VI | - |
| 36 | 0.5 | WH | 6106 | III | - | High Speed GMLAN Serial Data (-) (2) | 36 | 0.5 | WH | 6106 | VI | - |
| 37 | 0.75 | RD/D-BU | 4540 | III | - | Battery Positive Voltage | 37 | 0.75 | RD/D-BU | 4540 | VI | - |
| 38 | 3 | YE/VT | 1553 | II | - | Transfer Case Motor Counter Clockwise Control | 38 | 4 | YE/VT | 1553 | V | - |
| 39 | 0.75 | RD/VT | 2640 | IV | - | Battery Positive Voltage | 39 | 0.75 | RD/VT | 2640 | VIII | - |
| 40 | 0.5 | BN/L-GN | 4311 | III | - | Power Take Off Enable In Cab Switch Normally Closed Signal | 40 | 0.35 | BN/L-GN | 4311 | VII | - |
| 41 | 0.5 | L-GN/WH | 488 | III | - | Power Take Off Enable Switch | 41 | 0.35 | L-GN/WH | 488 | VII | - |
| 42 | 0.5 | VT/BN | 300 | III | - | Run Ignition 3 Voltage | 42 | 0.5 | VT/BN | 300 | VI | - |
| 43 | 0.5 | L-GN/BN | 507 | III | - | Wait To Start Indicator Control | 43 | 0.35 | L-GN/BN | 507 | VII | - |
| 44 | 0.5 | D-BU/YE | 68 | III | - | Low Coolant Level Indicator Control | 44 | 0.5 | D-BU/YE | 68 | VI | - |
| 48 | 3<br>3 | YE/GY<br>OG | 1552<br>1552 | II | - | Transfer Case Motor Clockwise Control<br>Transfer Case Motor Clockwise Control | 48 | 4 | YE/GY | 1552 | V | - |

## X119 Body Harness to Brake Clutch Jumper Harness (except E29)

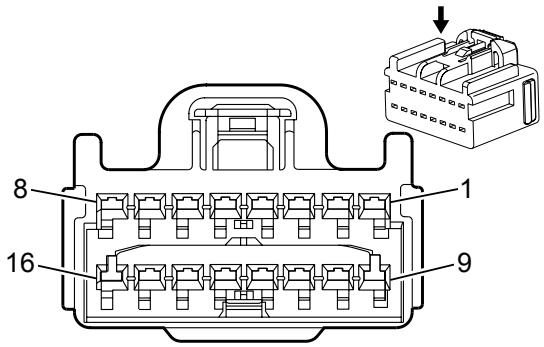


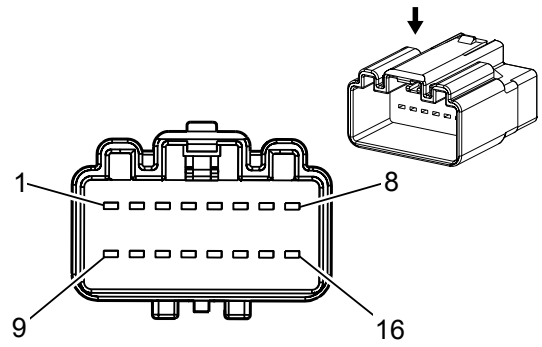


### Connector Part Information

Harness Type: Body

OEM Connector: 10847013

Service Connector: 89047090

Description: 16-Way F Kaizen YESC Series (GN)

### Connector Part Information

Harness Type: Brake Clutch Jumper

OEM Connector: 13507433

Service Connector: Service by Harness - See Part Catalog

Description: 16-Way M 1.5 Kaizen Series (GN)

### *Terminal Part Information*

| Terminal Type ID | Terminated Lead | Diagnostic Test Probe | Terminal Removal Tool | Service Terminal | Tray | Core Crimp | Insulation Crimp |
|---|---|---|---|---|---|---|---|
| I | Pending | Pending | Pending | Not Available | Not Available | Not Available | Not Available |
| II | Pending | J-35616-2A (GY) | J-38125-11A | 7116-4100-08 | 9 | E | C |
| III | Pending | J-35616-3 (GY) | J-38125-553 | 7114-4100-08 | 9 | E | C |

### *X119 Body Harness to Brake Clutch Jumper Harness (except E29)*

| Pin | Size | Color | Circuit | Terminal Type ID | Option | Function | Pin | Size | Color | Circuit | Terminal Type ID | Option |
|---|---|---|---|---|---|---|---|---|---|---|---|---|
| 1 | 0.35 | BK/D-BU | 1271 | I | - | Accelerator Pedal Position Low Reference (1) | 1 | 0.35 | BK/D-BU | 1271 | III | - |
| 2 | 0.35 | YE/WH | 1161 | I | - | Accelerator Pedal Position Signal (1) | 2 | 0.35 | YE/WH | 1161 | III | - |
| 3 | 0.35 | WH/RD | 1164 | I | - | Accelerator Pedal Position 5 Volt Reference (1) | 3 | 0.35 | WH/RD | 1164 | III | - |
| 4 | 0.35 | BK/VT | 1272 | I | - | Accelerator Pedal Position Low Reference (2) | 4 | 0.35 | BK/VT | 1272 | III | - |
| 5 | 0.35 | L-GN/WH | 1162 | I | - | Accelerator Pedal Position Signal (2) | 5 | 0.35 | L-GN/WH | 1162 | III | - |
| 6 | 0.35 | BN/RD | 1274 | I | - | Accelerator Pedal Position 5 Volt Reference (2) | 6 | 0.35 | BN/RD | 1274 | III | - |
| 7 | 0.5 | WH | 5359 | II | - | Brake Apply Sensor Supply Voltage | 7 | 0.5 | WH | 5359 | III | - |
| 8 | 0.5 | BK/BN | 5360 | II | - | Brake Apply Sensor | 8 | 0.5 | BK/BN | 5360 | III | - |

| | | | | | | | | | | | | |
|---|---|---|---|---|---|---|---|---|---|---|---|---|
| 8 | 0.5 | BK/BN | 5360 | II | - | Brake Apply Sensor Low Reference | 8 | 0.5 | BK/BN | 5360 | III | - |
| 9 | 0.5 | D-BU/YE | 5361 | II | - | Brake Apply Sensor Signal | 9 | 0.5 | D-BU/YE | 5361 | III | - |
| 10 | 0.5 | YE/BK | 7478 | II | - | Rotary Position Sensor Return | 10 | 0.5 | YE/BK | 7478 | III | - |
| 11 | 0.5 | WH/RD | 7477 | II | - | Rotary Position Sensor Supply 5V | 11 | 0.5 | WH/RD | 7477 | III | - |
| 12 | 0.5 | WH/L-GN | 7479 | II | - | Rotary Position Sensor Signal | 12 | 0.5 | WH/L-GN | 7479 | III | - |
| 13-16 | - | - | - | - | - | Not Occupied | 13-16 | - | - | - | - | - |

## X119 Brake Clutch Jumper Harness to Body Harness (E29)

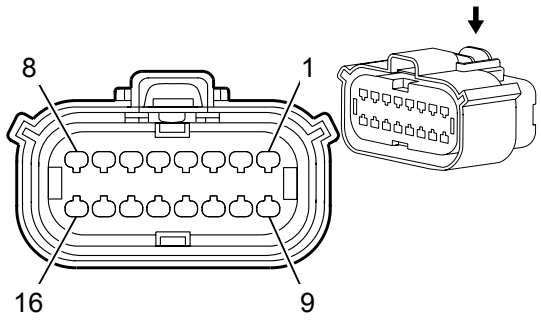


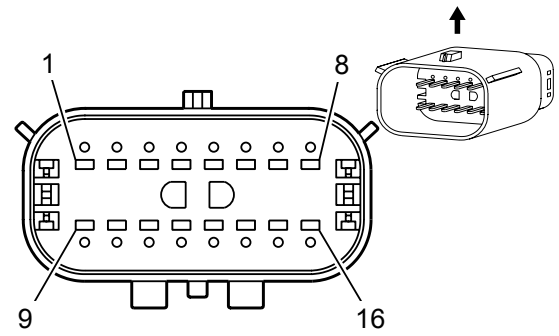


### Connector Part Information

Harness Type: Brake Clutch Jumper

OEM Connector: 13778557

Service Connector: 13584788

Description: 16-Way F 1.5 Series, Sealed (BK)

### Connector Part Information

Harness Type: Body

OEM Connector: 13551665

Service Connector: 19300393

Description: 16-Way M 150 MX Series, Sealed (BK)

### *Terminal Part Information*

| Terminal Type ID | Terminated Lead | Diagnostic Test Probe | Terminal Removal Tool | Service Terminal | Tray | Core Crimp | Insulation Crimp |
|---|---|---|---|---|---|---|---|
| I | Pending | Pending | Pending | Not Available | Not Available | Not Available | Not Available |
| II | Pending | J-35616-14 (GN) | J-38125-217 | Not Available | Not Available | E | 2 |
| III | Pending | J-35616-14 (GN) | J-38125-217 | Not Available | Not Available | Not Available | Not Available |

### *X119 Brake Clutch Jumper Harness to Body Harness (E29)*

| Pin | Size | Color | Circuit | Terminal Type ID | Option | Function | Pin | Size | Color | Circuit | Terminal Type ID | Option |
|---|---|---|---|---|---|---|---|---|---|---|---|---|
| 1 | 0.35 | BK/D-BU | 1271 | I | - | Accelerator Pedal Position Low Reference (1) | 1 | 0.35 | BK/D-BU | 1271 | I | - |
| 2 | 0.35 | YE/WH | 1161 | I | - | Accelerator Pedal Position Signal (1) | 2 | 0.35 | YE/WH | 1161 | I | - |
| 3 | 0.35 | WH/RD | 1164 | I | - | Accelerator Pedal Position 5 Volt Reference (1) | 3 | 0.35 | WH/RD | 1164 | I | - |
| 4 | 0.35 | BK/VT | 1272 | I | - | Accelerator Pedal Position Low Reference (2) | 4 | 0.35 | BK/VT | 1272 | I | - |
| 5 | 0.35 | L-GN/WH | 1162 | I | - | Accelerator Pedal Position Signal (2) | 5 | 0.35 | L-GN/WH | 1162 | I | - |
| 6 | 0.35 | BN/RD | 1274 | I | - | Accelerator Pedal Position 5 Volt Reference (2) | 6 | 0.35 | BN/RD | 1274 | I | - |
| 7-9 | - | - | - | - | - | Not Occupied | 7-9 | - | - | - | - | - |
| 10 | 0.5 | WH/L-GN | 526 | II | - | Stop Lamp Switch Signal | 10 | 0.35 | WH/L-GN | 526 | III | - |

| | | | | | | | | | | | | |
|---|---|---|---|---|---|---|---|---|---|---|---|---|
| | | | | | | Signal | | | | | | |
| 11 | 0.5 | BK/L-GN | 552 | II | - | Sensor Low Reference | 11 | 0.35 | BK/L-GN | 552 | III | - |
| 12 | 0.5 | GY/RD | 598 | II | - | 5 Volt Reference | 12 | 0.35 | GY/RD | 598 | III | - |
| 13 | 0.5 | GY/RD | 6109 | II | - | Clutch Apply Sensor Voltage Reference | 13 | 0.5 | GY/RD | 6109 | III | - |
| 14 | 0.5 | BK/GY | 6110 | II | - | Clutch Apply Sensor Low Reference | 14 | 0.5 | BK/GY | 6110 | III | - |
| 15 | 0.5 | YE | 6111 | II | - | Clutch Apply Sensor Signal | 15 | 0.5 | YE | 6111 | III | - |
| 16 | - | - | - | - | - | Not Occupied | 16 | - | - | - | - | - |

## X120 Forward Lamp Harness to Right Headlamp

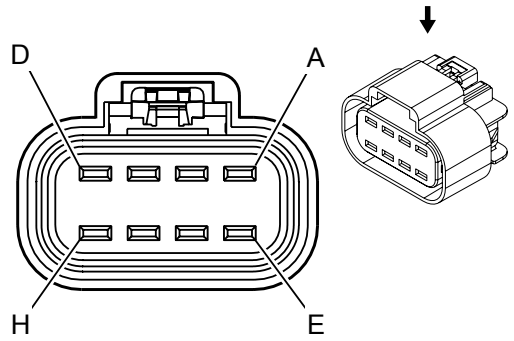


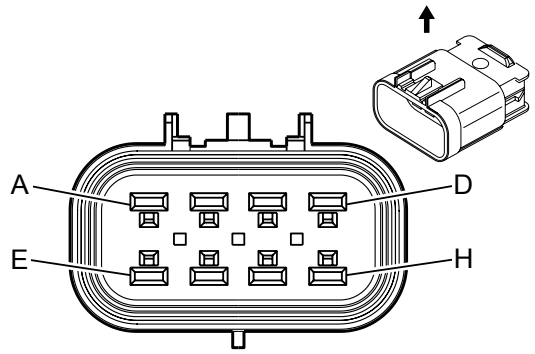


### Connector Part Information

Harness Type: Forward Lamp

OEM Connector: 15326654

Service Connector: SEE NOTE

Description: 8-Way F 280 GT 5.8 Series, Sealed (BK)

### Connector Part Information

Harness Type:

OEM Connector: EEM0286

Service Connector: Service by Harness – See Part Catalog

Description: 8 M 280 GT 5.8 Series, Sealed (BK)

### *Terminal Part Information*

| Terminal Type ID | Terminated Lead | Diagnostic Test Probe | Terminal Removal Tool | Service Terminal | Tray | Core Crimp | Insulation Crimp |
|---|---|---|---|---|---|---|---|
| I | 13575392 | J-35616-4A (PU) | J-38125-553 | 15304720 | 19 | 4 | 5 |
| II | 13576356 | J-35616-4A (PU) | J-38125-553 | 15304719 | 19 | 2 | 5 |
| III | 13576356 | J-35616-4A (PU) | J-38125-553 | 15304719 | 19 | E | 5 |
| IV | Not Available | Not Available | Not Available | Not Available | Not Available | Not Available | Not Available |

### *X120 Forward Lamp Harness to Right Headlamp*

| Pin | Size | Color | Circuit | Terminal Type ID | Option | Function | Pin | Size | Color | Circuit | Terminal Type ID | Option |
|---|---|---|---|---|---|---|---|---|---|---|---|---|
| A | 1.5 | BK | 250 | I | - | Ground | A | 0.5 | BK | 250 | IV | - |
| B | 0.75 | YE | 312 | II | - | Right Headlamp Low Beam Supply Voltage | B | 0.5 | RD | 312 | IV | - |
| C | 0.5 | WH | 311 | III | - | Right Headlamp High Beam Supply Voltage | C | 0.5 | BU | 311 | IV | - |
| D | - | - | - | - | - | Not Occupied | D | - | - | - | - | - |
| E | 0.5 | GY/BN | 309 | III | - | Right Park Lamp Supply Voltage | E | 0.5 | VT/GY | 309 | IV | - |
| F | 0.75 | L-GN/PU | 1315 | II | - | Right Front Turn Signal Lamp Supply Voltage | F | 0.5 | D-BU | 1315 | IV | - |
| G | 0.75 | D-BU/BN | 7539 | II | - | Right Front DRL Supply Voltage | G | 0.5 | BN | 1539 | IV | - |
| H | 0.5 | GY/BN | 309 | III | - | Right Park Lamp Supply Voltage | H | 0.5 | WH | 309 | IV | - |

## X125 Engine Harness to Chassis Harness

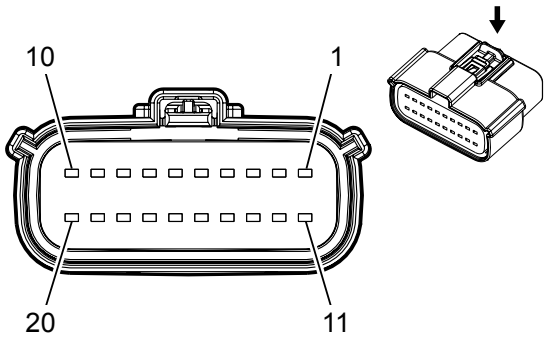


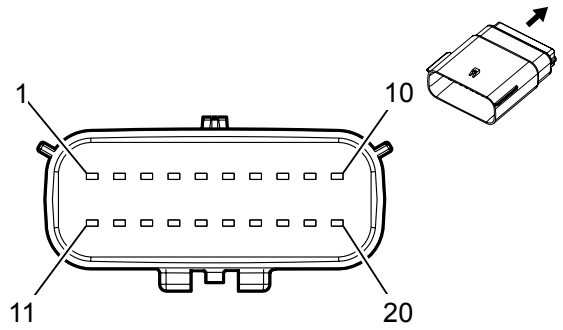


### Connector Part Information

Harness Type: Engine

OEM Connector: 13650143

Service Connector: 19300557

Description: 20-Way F 1.5 Series, Sealed (BK)

### Connector Part Information

Harness Type: Chassis

OEM Connector: 13520296

Service Connector: 19300560

Description: 20-Way M 1.5 Series, Sealed (BK)

### *Terminal Part Information*

| Terminal Type ID | Terminated Lead | Diagnostic Test Probe | Terminal Removal Tool | Service Terminal | Tray | Core Crimp | Insulation Crimp |
|---|---|---|---|---|---|---|---|
| I | Pending | J-35616-14 (GN) | J-38125-217 | Not Available | Not Available | E | 2 |
| II | Pending | J-35616-14 (GN) | J-38125-217 | Not Available | Not Available | 2 | 4 |
| III | Pending | Pending | Pending | Not Available | Not Available | Not Available | Not Available |
| IV | Pending | J-35616-3 (GY) | J-38125-217 | Not Available | Not Available | Not Available | Not Available |

### *X125 Engine Harness to Chassis Harness*

| Pin | Size | Color | Circuit | Terminal Type ID | Option | Function | Pin | Size | Color | Circuit | Terminal Type ID | Option |
|---|---|---|---|---|---|---|---|---|---|---|---|---|
| 1 | 0.5<br>0.5 | VT/D-BU<br>BK/L-GN | 3120<br>3657 | I | - | Heated Oxygen Sensor High Signal Bank 1 Sensor (2)<br>Exhaust Gas Temperature Sensor #3 Low Reference | 1 | 0.5<br>0.5 | BK/L-GN<br>VT/D-BU | 3657<br>3120 | III | - |
| 2 | 0.5<br>0.5 | WH/YE<br>GY/L-GN | 3121<br>5378 | I | - | Heated Oxygen Sensor Low Signal Bank 1 Sensor (2)<br>Exhaust Gas Temperature Sensor (3) | 2 | 0.5<br>0.5 | GY/L-GN<br>WH/YE | 5378<br>3121 | III | - |
| 3 | 0.5<br>0.5 | GY/WH<br>BK/PU | 3122<br>3661 | I | - | Heated Oxygen Sensor Heater Low Control Bank 1 Sensor (2)<br>Exhaust Gas Temperature Sensor #5 Low Reference | 3 | 0.5<br>0.5 | BK/VT<br>GY/WH | 3661<br>3122 | III | - |
| 4 | 0.5<br>0.5 | VT/D-BU<br>D-BU/GY | 5294<br>3660 | I | - | Powertrain Main Relay Fused Supply (5)<br>Exhaust Gas | 4 | 0.5<br>0.5 | D-BU/GY<br>VT/D-BU | 3660<br>5294 | III | - |

| | | | | | | | | | | | | |
|---|---|---|---|---|---|---|---|---|---|---|---|---|
| | | | | | | Exhaust Gas Temperature Sensor #5 Signal | | | | | | |
| 5 | 0.5 | D-BU/YE | 6105 | I | - | High Speed GMLAN Serial Data (+) (2) | 5 | 0.5 | D-BU/YE | 6105 | IV | - |
| 6 | 0.5 | WH | 6106 | I | - | High Speed GMLAN Serial Data (-) (2) | 6 | 0.5 | WH | 6106 | IV | - |
| 7 | 0.5 | WH | 1310 | I | - | EVAP Canister Vent Solenoid Control | 7 | 0.5 | WH | 1310 | IV | - |
| 8 | 0.5 | D-BU/WH | 1937 | I | - | Secondary Fuel Level Sensor Signal | 8 | 0.5 | D-BU/WH | 1937 | IV | - |
| 9-10 | - | - | - | - | - | Not Occupied | 9-10 | - | - | - | - | - |
| 11 | 0.5 | D-BU/VT | 1589 | I | - | Primary Fuel Level Sensor Signal | 11 | 0.5 | D-BU/VT | 1589 | IV | - |
| 12 | 0.5 | BK/L-GN | 6281 | I | - | Fuel Level Sensor Low Reference | 12 | 0.5 | BK/L-GN | 6281 | IV | - |
| 13 | 0.5 | D-BU | 6053 | I | - | Exhaust Pressure Sensor Signal (1) | 13 | 0.5 | D-BU | 6053 | III | - |
| 14 | 0.5 | WH/RD | 6054 | I | - | Exhaust Pressure Sensor 5 Volt Reference (1) | 14 | 0.5 | WH/RD | 6054 | III | - |
| 15 | 0.5<br>0.5 | D-BU/WH<br>BK/YE | 890<br>6055 | I | - | Fuel Tank Pressure Sensor Signal<br>Exhaust Pressure Sensor Low Reference (1) | 15 | 0.5<br>0.5 | D-BU/WH<br>BK/YE | 890<br>6055 | IV | - |
| 16 | 0.5 | YE/RD | 2709 | I | - | Fuel Tank Pressure Sensor 5 Volt Reference | 16 | 0.5 | YE/RD | 2709 | IV | - |
| 17 | 0.5 | D-BU/BK | 7493 | I | - | High Speed GMLAN Serial Data (+)(3) | 17 | 0.5 | D-BU/BK | 7493 | IV | - |
| 18 | 0.5 | WH | 7494 | I | - | High Speed GMLAN Serial Data (-)(3) | 18 | 0.5 | WH | 7494 | IV | - |
| 19 | 1.5 | GY | 3672 | II | - | Nox Sensor (2) Supply Voltage | 19 | 0.75 | GY | 3672 | IV | - |
| 20 | 1.5 | BK/GY | 3671 | II | - | Nox Sensor (2) Ground | 20 | 0.75 | BK/GY | 3671 | IV | - |

## X135 Fuel Pressure Sensor Jumper Harness to Engine Harness

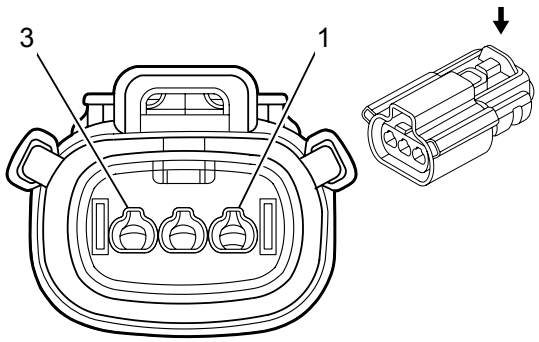


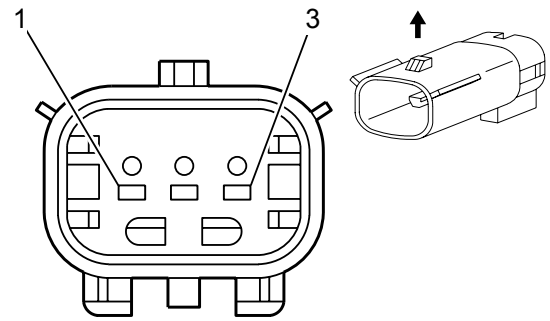


### Connector Part Information

Harness Type: Fuel Pressure Sensor Jumper

OEM Connector: 33471-0301

Service Connector: 19167749

Description: 3-Way F 1.5 Series, Sealed (BK)

### Connector Part Information

Harness Type: Engine

OEM Connector: 33481-0301

Service Connector: 13580232

Description: 3-Way M 150 MX Series (BK)

### *Terminal Part Information*

| Terminal Type ID | Terminated Lead | Diagnostic Test Probe | Terminal Removal Tool | Service Terminal | Tray | Core Crimp | Insulation Crimp |
|---|---|---|---|---|---|---|---|
| I | Pending | Pending | Pending | Not Available | Not Available | Not Available | Not Available |

### *X135 Fuel Pressure Sensor Jumper Harness to Engine Harness*

| Pin | Size | Color | Circuit | Terminal Type ID | Option | Function | Pin | Size | Color | Circuit | Terminal Type ID | Option |
|---|---|---|---|---|---|---|---|---|---|---|---|---|
| 1 | 0.5 | | 2917 | I | LML | Fuel Rail Pressure Sensor (5) Volt Reference | 1 | 0 | | 2917 | I | LML |
| 2 | 0.5 | YE | 2918 | I | LML | Fuel Rail Pressure Sensor Signal | 2 | 0 | YE | 2918 | I | LML |
| 3 | 0.5 | OG/BK | 2919 | I | LML | Fuel Rail Pressure Sensor Low Reference | 3 | 0 | OG/BK | 2919 | I | LML |

## X138 Chassis Harness to Body Harness

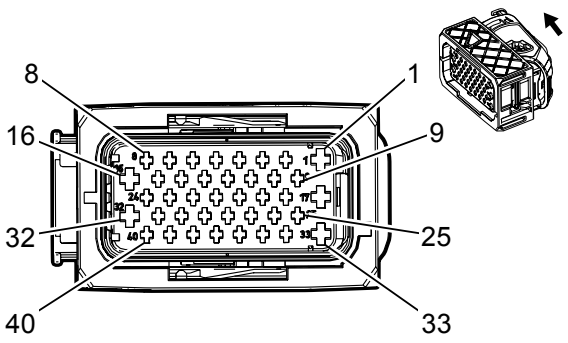


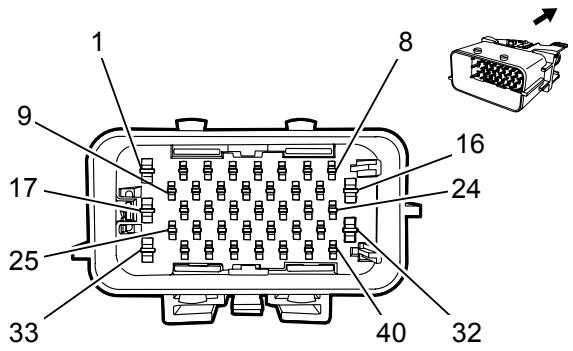


### Connector Part Information

Harness Type: Chassis

OEM Connector: 13965186

Service Connector: 19301818

Description: 40-Way F 1.5 DSQ, 2.8 ATS Series, Sealed

### Connector Part Information

Harness Type: Body

OEM Connector: 13603208

Service Connector: 13576551

Description: 40-Way M 1.5 DSQ, 2.8 ATS Series, Sealed (BK)

### *Terminal Part Information*

| Terminal Type ID | Terminated Lead | Diagnostic Test Probe | Terminal Removal Tool | Service Terminal | Tray | Core Crimp | Insulation Crimp |
|---|---|---|---|---|---|---|---|
| I | Not Available | J-35616-35 (VT) | J-38125-36 | 4-964286-1 | 16 | E | 1 |
| II | 13578884 | J-35616-14 (GN) | J-38125-560 | 964274-2 | 16 | E | 1 |
| III | 13327155 | J-35616-35 (VT) | J-38125-36 | 4-964273-1 | 15 | C | 5 |
| IV | 13327181 | J-35616-14 (GN) | J-38125-560 | 964274-2 | 16 | E | 1 |
| V | 13580827 | J-35616-5 (PU) | J-38125-36 | 1-962915-3 | 15 | E | 1 |
| VI | 13575380 | J-35616-3 (GY) | J-38125-560 | Not Available | Not Available | E | 1 |
| VII | 13578882 | J-35616-3 (GY) | J-38125-560 | Not Available | Not Available | Not Available | Not Available |
| VIII | 13578881 | J-35616-5 (PU) | J-38125-36 | Not Available | Not Available | C | 4 |

### *X138 Chassis Harness to Body Harness*

| Pin | Size | Color | Circuit | Terminal Type ID | Option | Function | Pin | Size | Color | Circuit | Terminal Type ID | Option |
|---|---|---|---|---|---|---|---|---|---|---|---|---|
| 1 | 0.5 | L-GN/BK | 7633 | I | - | Integrated Trailer Brake Controller User Gain Signal | 1 | | | | | |
| 2 | 0.5 | L-GN/BN | 2087 | II | - | Combined Vehicle Inertial Sensor Supply Voltage | 2 | 0.35 | L-GN/BN | 2087 | VII | - |
| 3 | 0.5 | YE | 7635 | II | - | Integrated Trailer Brake Controller Manual Apply Signal | 3 | | | | | |
| 4 | 0.5 | D-BU/RD | 7632 | II | - | Integrated Trailer Brake Controller Switch 5 Volt Reference | 4 | | | | | |

| | | | | | | | | | | | | |
|---|---|---|---|---|---|---|---|---|---|---|---|---|
| 5 | 0.5 | BN | 7634 | II | - | Integrated Trailer Brake Contoller Redundant Manual Apply Signal | 5 | | | | | |
| 6 | 0.5 | BK/BN | 7631 | II | - | Integrated Trailer Brake Controller Switch Low Reference | 6 | | | | | |
| 7-8 | - | - | - | - | - | Not Occupied | 7-8 | - | - | - | - | - |
| 9 | 0.5 | BN/WH | 2374 | II | - | Object Sensor Supply Voltage | 9 | | | | | |
| 10 | - | - | - | - | - | Not Occupied | 10 | - | - | - | - | - |
| 11 | 0.5 | YE | 2375 | II | - | Left Rear Corner Object Sensor Signal | 11 | | | | | |
| 12 | 0.5 | YE/D-BU | 2376 | II | - | Left Rear Middle Object Sensor Signal | 12 | | | | | |
| 13 | 0.5 | YE/VT | 2378 | II | - | Right Rear Corner Object Sensor Signal | 13 | | | | | |
| 14 | 0.5 | YE/WH | 2377 | II | - | Right Rear Middle Object Sensor Signal | 14 | | | | | |
| 15 | - | - | - | - | - | Not Occupied | 15 | - | - | - | - | - |
| 16 | 0.5 | L-GN/YE | 6846 | I | - | Rear License Lamp Supply Voltage | 16 | 0.5 | L-GN/YE | 6846 | V | - |
| 17 | 0.5 | WH/D-BU | 5986 | I | - | Serial Data Communication Enable | 17 | 0.5 | WH/D-BU | 5986 | V | - |
| 18 | 0.5 | D-BU | 2500 | II | - | High Speed GMLAN Serial Data (+) (1) | 18 | 0.5 | D-BU | 2500 | VI | - |
| 19 | 0.5 | WH | 2501 | II | - | High Speed GMLAN Serial Data (-) (1) | 19 | 0.5 | WH | 2501 | VI | - |
| 20 | 0.5 | VT/YE | 5985 | II | - | Accessory Wakeup Serial Data | 20 | 0.5 | VT/YE | 5985 | VI | - |
| 21 | 0.5 | BK/GY | 2379 | II | - | Object Sensor Low Reference | 21 | | | | | |
| 22-28 | - | - | - | - | - | Not Occupied | 22-28 | - | - | - | - | - |
| 29 | 0.5 | BK | 2550 | II | - | Ground | 29 | | | | | |
| 30 | 0.5 | BK | 6974 | II | - | Camera Drain Wire | 30 | | | | | |
| 31 | - | - | - | - | - | Not Occupied | 31 | - | - | - | - | - |
| 32 | 2.5 | D-BU | 47 | III | - | Trailer Auxiliary Supply Voltage | 32 | 2.5 | D-BU | 47 | VIII | - |
| 33-35 | - | - | - | - | - | Not Occupied | 33-35 | - | - | - | - | - |
| 36 | 0.75 | WH/VT | 1430 | IV | - | Exterior Courtesy Lamp Supply Voltage | 36 | | | | | |
| 37 | 0.5 | GY/YE | 6972 | II | - | Camera Signal 2 | 37 | | | | | |

| | | | | | | | | | | | | |
|---|---|---|---|---|---|---|---|---|---|---|---|---|
| 37 | 0.5 | GY/YE | 6972 | II | - | Camera Signal #2 + | 37 | | | | | |
| 38 | 0.5 | WH/D-BU | 6973 | II | - | Camera Signal #2 | 38 | | | | | |
| 39 | - | - | - | - | - | Not Occupied | 39 | - | - | - | - | - |
| 40 | 0.5 | L-GN/GY | 817 | II | - | Vehicle Speed Signal | 40 | | | | | |

## X150 Body Harness to Forward Lamp Harness

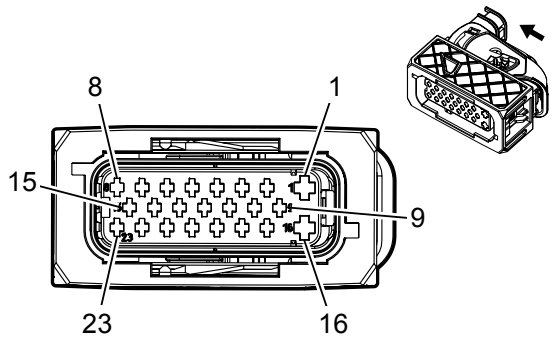


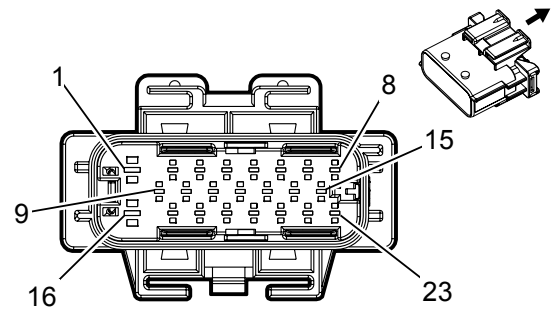


### Connector Part Information

Harness Type: Body

OEM Connector: 13674800

Service Connector: No SDC/FSU

Description: 23-Way F 1.5 DSQ, 2.8 AST Series, Sealed (BK)

### Connector Part Information

Harness Type: Forward Lamp

OEM Connector: 13750011

Service Connector: 19301797

Description: 23-Way M 1.5, 2.8 Series, Sealed (BK)

### *Terminal Part Information*

| Terminal Type ID | Terminated Lead | Diagnostic Test Probe | Terminal Removal Tool | Service Terminal | Tray | Core Crimp | Insulation Crimp |
|---|---|---|---|---|---|---|---|
| I | 13575389 | J-35616-35 (VT) | J-38125-36 | 4-964286-1 | 16 | E | 1 |
| II | 13576369 | J-35616-14 (GN) | J-38125-560 | Not Available | Not Available | E | 1 |
| III | 13580827 | J-35616-5 (PU) | J-38125-36 | 1-962915-3 | 15 | E | 1 |
| IV | 13575380 | J-35616-3 (GY) | J-38125-560 | Not Available | Not Available | E | 1 |

### *X150 Body Harness to Forward Lamp Harness*

| Pin | Size | Color | Circuit | Terminal Type ID | Option | Function | Pin | Size | Color | Circuit | Terminal Type ID | Option |
|---|---|---|---|---|---|---|---|---|---|---|---|---|
| 1 | 0.35 | BK/D-BU | 61 | I | - | Outside Ambient Temperature Sensor Low Reference | 1 | 0.5 | BK/D-BU | 61 | III | - |
| 2-3 | - | - | - | - | - | Not Occupied | 2-3 | - | - | - | - | - |
| 4 | 0.5 | YE/GY | 5216 | II | - | Front Parking Left Mid Sensor | 4 | 0.5 | YE/GY | 5216 | IV | - |
| 5 | 0.5 | WH/GY | 5217 | II | - | Front Parking Right Corner Sensor | 5 | 0.5 | WH/GY | 5217 | IV | - |
| 6 | 0.5 | VT/GY | 5218 | II | - | Front Parking Right Mid Sensor | 6 | 0.5 | VT/GY | 5218 | IV | - |
| 7 | 0.5 | BK/D-BU | 5214 | II | - | Front Parking Sensor Low Reference | 7 | 0.5 | BK/D-BU | 5214 | IV | - |
| 8 | 0.5 | VT/WH | 5215 | II | - | Front Parking Left Corner Sensor | 8 | 0.5 | VT/WH | 5215 | IV | - |
| 14 | 0.35 | VT | 185 | II | - | Low Washer Fluid Indicator Control | 14 | 0.5 | VT | 185 | IV | - |

| | | | | | | | | | | | | |
|---|---|---|---|---|---|---|---|---|---|---|---|---|
| 15 | 0.5 | YE/VT | 5213 | II | - | Front Parking Left/Right/Mid Sensor | 15 | 0.5 | YE/VT | 5213 | IV | - |
| 16 | 0.35 | D-BU/GY | 636 | I | - | Outside Ambient Air Temperature Sensor Signal | 16 | 0.5 | D-BU/GY | 636 | III | - |
| 17-19 | - | - | - | - | - | Not Occupied | 17-19 | - | - | - | - | - |
| 20 | 0.35<br>0.35 | OG/YE<br>OG/GY | 354<br>6618 | II | - | Left Front Discriminating Sensor Signal<br>Middle Front Discriminating Sensor Signal | 20 | 0.5 | OG/GY | 6618 | IV | - |
| 21 | 0.35<br>0.35 | BK/OG<br>BK/OG | 5045<br>6619 | II | - | Left Front Discriminating Sensor Low Reference<br>Middle Front Discriminating Sensor Low Reference | 21 | 0.5 | BK/OG | 6619 | IV | - |
| 22 | - | - | - | - | - | Not Occupied | 22 | - | - | - | - | - |
| 23 | 0.5 | BN/L-GN | 109 | II | - | Hood Ajar Switch Signal | 23 | 0.5 | BN/L-GN | 109 | IV | - |

## X155 Engine Harness to Engine Harness (LML)

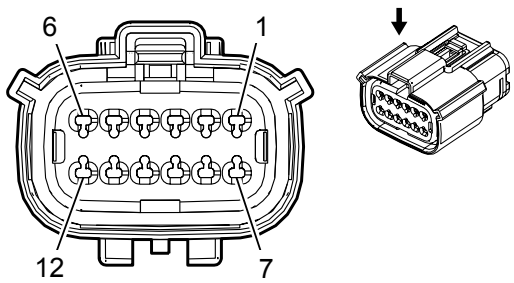


### Connector Part Information

Harness Type: Engine

OEM Connector: 33472-1301

Service Connector: 19260932

Description: 12-Way F 150 MX Series, Sealed (BK)

### Connector Part Information

Harness Type: Engine

OEM Connector: 334821201

Service Connector: Not Available

Description:

### *Terminal Part Information*

| Terminal Type ID | Terminated Lead | Diagnostic Test Probe | Terminal Removal Tool | Service Terminal | Tray | Core Crimp | Insulation Crimp |
|---|---|---|---|---|---|---|---|
| I | Not Available | Not Available | Not Available | Not Available | Not Available | Not Available | Not Available |

### *X155 Engine Harness to Engine Harness (LML)*

| Pin | Size | Color | Circuit | Terminal Type ID | Option | Function | Pin | Size | Color | Circuit | Terminal Type ID | Option |
|---|---|---|---|---|---|---|---|---|---|---|---|---|
| 1 | 0.50F | YE | 410 | I | - | Engine Coolant Temperature Sensor Signal | 1 | | | | | |
| 2 | 0.50F | | 2761 | I | - | Coolant Temperature Sensor Low Reference | 2 | | | | | |
| 3 | 0.50F | BN/GY | 7072 | I | - | Sensor Fuel Temperature 1 Signal | 3 | | | | | |
| 4 | 0.50F | BN/WH | 7073 | I | - | Sensor Fuel Temperature 1 Return | 4 | | | | | |
| 5 | 0.50F | YE | 2928 | I | - | Fuel Metering Valve High Control | 5 | | | | | |
| 6 | 0.50F | BK | 2929 | I | - | Fuel Metering Valve Low Control | 6 | | | | | |
| 7 | 0.8 | VT/WH | 2530 | I | - | Fuel Rail Pressure Solenoid Supply Voltage | 7 | | | | | |
| 8 | 0.8 | YE | 2834 | I | - | Fuel Rail Pressure Solenoid Low Reference | 8 | | | | | |
| 9 | 0.50F | WH | 331 | I | - | Oil Pressure Sensor Signal | 9 | | | | | |

| | | | | | | | | | | | | |
|---|---|---|---|---|---|---|---|---|---|---|---|---|
| 10 | 0.50F | BK | 2755 | I | - | Oil Pressure Sensor Low Reference | 10 | | | | | |
| 11 | 0.50F | GY | 2705 | I | - | Oil Pressure Sensor 5 Volt Reference | 11 | | | | | |
| 12 | 0.50F | BN | 1174 | I | - | Oil Level Switch Signal | 12 | | | | | |

## X159 Engine Harness to Camshaft Position Sensor Jumper Harness

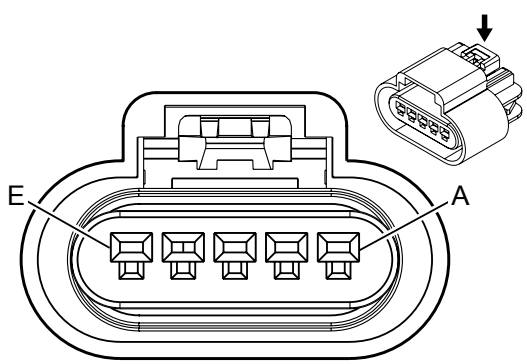


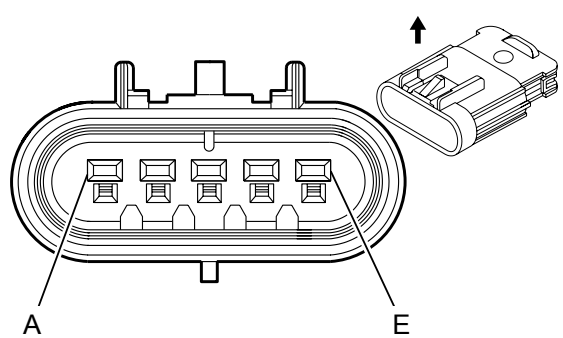


### Connector Part Information

Harness Type: Engine

OEM Connector: 15326822

Service Connector: 13585858

Description: 5-Way F 150 GT Series, Sealed (BK)

### Connector Part Information

Harness Type: Camshaft Position Sensor Jumper

OEM Connector: 15326827

Service Connector: 13504593

Description: 5-Way M 150 GT Series, Sealed (BK)

### *Terminal Part Information*

| Terminal Type ID | Terminated Lead | Diagnostic Test Probe | Terminal Removal Tool | Service Terminal | Tray | Core Crimp | Insulation Crimp |
|---|---|---|---|---|---|---|---|
| I | 13575298 | J-35616-2A (GY) | J-38125-553 | 12191819 | 8 | E | 1 |
| II | 13576363 | J-35616-3 (GY) | J-38125-553 | 15326269 | 19 | E | 4 |

### *X159 Engine Harness to Camshaft Position Sensor Jumper Harness*

| Pin | Size | Color | Circuit | Terminal Type ID | Option | Function | Pin | Size | Color | Circuit | Terminal Type ID | Option |
|---|---|---|---|---|---|---|---|---|---|---|---|---|
| A | 0.5 | GY/D-BU | 5300 | I | - | Camshaft Position Intake Sensor Supply Voltage (1) | A | 0.35 | D-BU | 6259 | II | - |
| B | 0.5 | BK/L-GN | 5301 | I | - | Camshaft Position Intake Sensor Low Reference (1) | B | 0.35 | BN | 6266 | II | - |
| C | 0.5 | YE/VT | 5275 | I | - | Camshaft Position Intake Sensor (1) | C | 0.35 | D-BU/WH | 6265 | II | - |
| D | 0.5 | VT/BN | 5284 | I | - | Camshaft Phaser Intake Solenoid (1) | D | 0.35 | | 5284 | II | - |
| E | 0.5 | BK/BN | 6753 | I | - | Cam Phaser W Return Low Reference | E | 0.35 | PU | 2199 | II | - |

## X160 Engine Harness to Odd Fuel Injector Harness

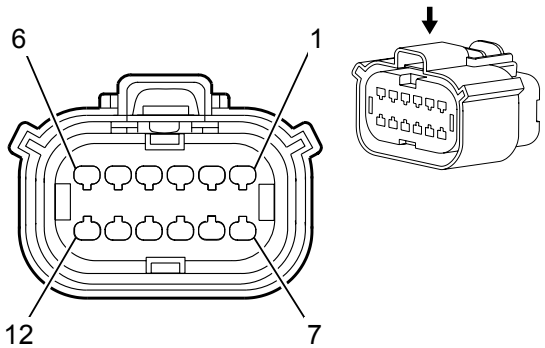


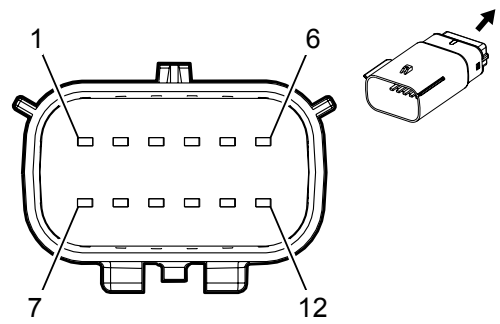


### Connector Part Information

Harness Type: Engine

OEM Connector: 13653762

Service Connector: 13503528

Description: 12-Way F 1.5 Series, Sealed (BK)

### Connector Part Information

Harness Type:

OEM Connector: 13503542

Service Connector: Service by Harness - See Part Catalog

Description: 12 M  (BK)

### *Terminal Part Information*

| Terminal Type ID | Terminated Lead | Diagnostic Test Probe | Terminal Removal Tool | Service Terminal | Tray | Core Crimp | Insulation Crimp |
|---|---|---|---|---|---|---|---|
| I | Not Available | Not Available | Not Available | Not Available | Not Available | Not Available | Not Available |

### *X160 Engine Harness to Odd Fuel Injector Harness*

| Pin | Size | Color | Circuit | Terminal Type ID | Option | Function | Pin | Size | Color | Circuit | Terminal Type ID | Option |
|---|---|---|---|---|---|---|---|---|---|---|---|---|
| 1 | 0.75 | BN/WH | 4901 | I | - | Direct Fuel Injector (DFI) High Voltage Supply Cylinder 1 | 1 | 0.5 | BN/WH | 4901 | I | L83/L86 |
| 2 | 0.75 | L-GN/BK | 4903 | I | - | Direct Fuel Injector (DFI) High Voltage Supply Cylinder 3 | 2 | 0.5 | GN/GY | 4903 | I | L83/L86 |
| 3 | 0.75 | L-GN/WH | 4905 | I | - | Direct Fuel Injector (DFI) High Voltage Supply Cylinder 5 | 3 | 0.5 | GN/WH | 4905 | I | L83/L86 |
| 4 | 0.75 | WH/YE | 4907 | I | - | Direct Fuel Injector (DFI) High Voltage Supply Cylinder 7 | 4 | 0.5 | WH/YE | 4907 | I | L83/L86 |
| 5 | 0.75 | BN | 4801 | I | - | Direct Fuel Injector (DFI) High Voltage Control Cylinder 1 | 5 | 0.5 | BN | 4801 | I | L83/L86 |
| 6 | 0.5 | BN/YE | 2161 | I | - | Fuel Rail Pressure Sensor #2 Signal | 6 | 0.5 | BN/YE | 2161 | I | L83/L86 |
| 7 | 0.75 | L-GN | 4803 | I | - | Direct Fuel Injector (DFI) High Voltage Control Cylinder 3 | 7 | 0.5 | GN | 4803 | I | L83/L86 |
| 8 | 0.75 | WH/L-GN | 4805 | I | - | Direct Fuel Injector (DFI) High Voltage Control Cylinder 5 | 8 | 0.5 | WH/GN | 4805 | I | L83/L86 |

| | | | | | | | | | | | | |
|---|---|---|---|---|---|---|---|---|---|---|---|---|
| 9 | 0.75 | YE/GY | 4807 | I | - | Direct Fuel Injector (DFI) High Voltage Control Cylinder 7 | 9 | 0.5 | YE/GY | 4807 | I | L83/L86 |
| 10 | 0.5 | BN/RD | 2917 | I | - | Fuel Rail Pressure Sensor (5) Volt Reference | 10 | 0.5 | BN/RD | 2917 | I | - |
| 11 | 0.5 | D-BU/WH | 2918 | I | - | Fuel Rail Pressure Sensor Signal | 11 | 0.5 | BU/WH | 2918 | I | - |
| 12 | 0.5 | BK/L-GN | 2919 | I | - | Fuel Rail Pressure Sensor Low Reference | 12 | 0.5 | BK/GN | 2919 | I | - |

## X161 Engine Harness to Even Fuel Injector Harness

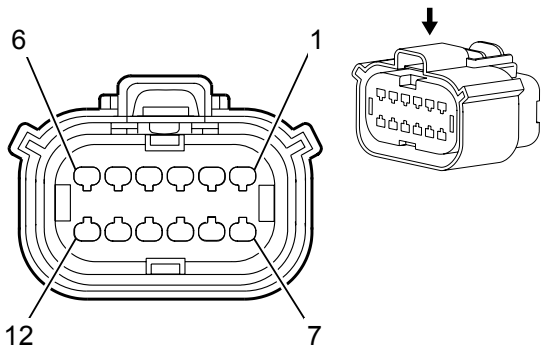


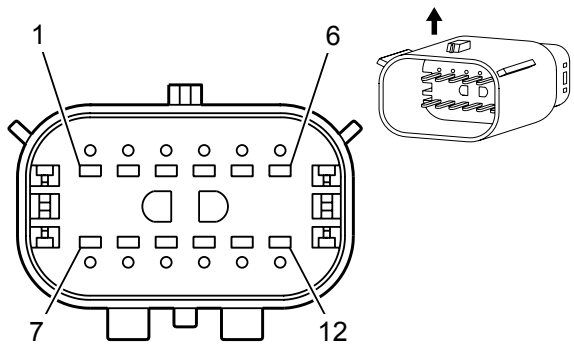


### Connector Part Information

Harness Type: Engine

OEM Connector: 13863397

Service Connector: No SDC/FSU

Description: 12-Way F 1.5 Series, Sealed (BK)

Harness Type: Engine

OEM Connector: 13922706

Service Connector: 13503528

Description: 12-Way F 1.5 Series, Sealed (BK)

### Connector Part Information

Harness Type:

OEM Connector: 13577093

Service Connector: Service by Harness - See Part Catalog

Description: 12-Way M 150 MX Series, Sealed (BK)

### *Terminal Part Information*

| Terminal Type ID | Terminated Lead | Diagnostic Test Probe | Terminal Removal Tool | Service Terminal | Tray | Core Crimp | Insulation Crimp |
|---|---|---|---|---|---|---|---|
| I | Not Available | J-35616-14 (GN) | J-38125-217 | Not Available | Not Available | A/E | A/C |
| II | Not Available | Not Available | Not Available | Not Available | Not Available | Not Available | Not Available |

### *X161 Engine Harness to Even Fuel Injector Harness*

| Pin | Size | Color | Circuit | Terminal Type ID | Option | Function | Pin | Size | Color | Circuit | Terminal Type ID | Option |
|---|---|---|---|---|---|---|---|---|---|---|---|---|
| 1 | 0.75 | D-BU/YE | 4902 | II | - | Direct Fuel Injector (DFI) High Voltage Supply Cylinder 2 | 1 | | | | | |
| 2 | 0.75<br>0.75 | D-BU/YE<br>D-BU/WH | 4902<br>4904 | I | LV1/LV3 | Direct Fuel Injector (DFI) High Voltage Supply Cylinder 2<br>Direct Fuel Injector (DFI) High Voltage Supply Cylinder 4 | 2 | 0.5 | BU/GY | 4902 | II | LV1/LV3 |
| 3 | 0.75<br>0.75 | D-BU/WH<br>VT | 4904<br>4906 | I | LV1/LV3 | Direct Fuel Injector (DFI) High Voltage Supply Cylinder 4<br>Direct Fuel Injector (DFI) High Voltage Supply Cylinder 6 | 3 | 0.5 | BU/WH | 4904 | II | LV1/LV3 |
| 4 | 0.75<br>0.75 | VT<br>GY/D-BU | 4906<br>4908 | I | LV1/LV3 | Direct Fuel Injector (DFI) High Voltage Supply Cylinder 6<br>Direct Fuel Injector (DFI) High Voltage | 4 | 0.5 | VT/GY | 4906 | II | LV1/LV3 |

| | | | | | | | | | | | | |
|---|---|---|---|---|---|---|---|---|---|---|---|---|
| | | | | | | (DFI) High Voltage Supply Cylinder 8 | | | | | | |
| 5 | 0.75<br>0.75 | D-BU<br>D-BU | 4802<br>4802 | I | LV1/LV3 | Direct Fuel Injector (DFI) High Voltage Control Cylinder 2<br>Direct Fuel Injector (DFI) High Voltage Control Cylinder 2 | 5 | 0.5 | BU | 4802 | II | LV1/LV3 |
| 6-7 | - | - | - | - | - | Not Occupied | 6-7 | - | - | - | - | - |
| 8 | 0.75<br>0.75 | GY/D-BU<br>GY/D-BU | 4804<br>4804 | I | LV1/LV3 | Direct Fuel Injector (DFI) High Voltage Control Cylinder 4<br>Direct Fuel Injector (DFI) High Voltage Control Cylinder 4 | 8 | 0.5 | GY/BU | 4804 | II | LV1/LV3 |
| 9 | 0.75<br>0.75 | PU/L-GN<br>PU/L-GN | 4806<br>4806 | I | LV1/LV3 | Direct Fuel Injector (DFI) High Voltage Control Cylinder 6<br>Direct Fuel Injector (DFI) High Voltage Control Cylinder 6 | 9 | 0.5 | VT/GN | 4806 | II | LV1/LV3 |
| 10 | 0.75<br>0.75 | VT/BK<br>GY | 7300<br>4808 | I | LV1/LV3 | High Pressure Fuel Pump Actuator Low - Control<br>Direct Fuel Injector (DFI) High Voltage Control Cylinder 8 | 10 | 0.5 | VT/BK | 7300 | II | LV1/LV3 |
| 11 | 0.75<br>0.75 | YE<br>VT/BK | 7301<br>7300 | I | LV1/LV3 | High Pressure Fuel Pump Actuator High - Control<br>High Pressure Fuel Pump Actuator Low - Control | 11 | 0.5 | YE | 7301 | II | LV1/LV3 |
| 12 | 0.75 | YE | 7301 | II | - | High Pressure Fuel Pump Actuator High - Control | 12 | | | | | |

## X170 Engine Harness to Ignition Coil (Odd) Harness

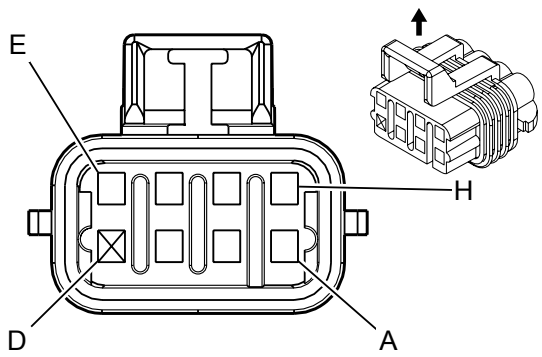


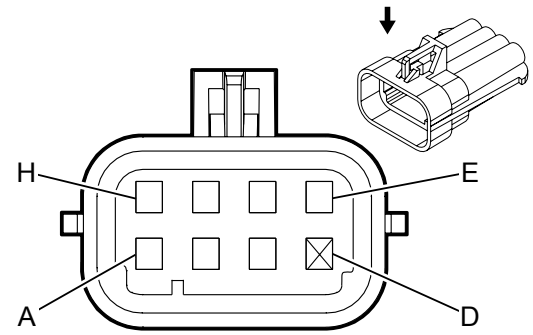


### Connector Part Information

Harness Type: Engine

OEM Connector: 12047938

Service Connector: 13580883

Description: 8-Way F 150 Metri Pack Series, Sealed (L-GY)

### Connector Part Information

Harness Type: Ignition Coil (Odd) Jumper

OEM Connector: 15496016

Service Connector: 12102490

Description: 8-Way M 150 Metri Pack Series (GY)

### *Terminal Part Information*

| Terminal Type ID | Terminated Lead | Diagnostic Test Probe | Terminal Removal Tool | Service Terminal | Tray | Core Crimp | Insulation Crimp |
|---|---|---|---|---|---|---|---|
| I | 13575427 | J-35616-14 (GN) | J-38125-12A | 12048074 | 2 | E | 1 |
| II | Pending | J-35616-3 (GY) | J-38125-12A | 12045773 | 2 | E | 1 |
| III | 13575420 | J-35616-3 (GY) | J-38125-12A | 12045773 | 2 | E | 1 |

### *X170 Engine Harness to Ignition Coil (Odd) Harness*

| Pin | Size | Color | Circuit | Terminal Type ID | Option | Function | Pin | Size | Color | Circuit | Terminal Type ID | Option |
|---|---|---|---|---|---|---|---|---|---|---|---|---|
| A | 0.75 | BK | 350 | I | - | Ground | A | 0.8 | BK | 151 | II | - |
| B | 0.5 | D-BU/WH | 2122 | I | - | Ignition Control (2) | B | 0.5 | RD | 2127 | III | - |
| C | 0.5 | YE/D-BU | 2124 | I | - | Ignition Control (4) | C | 0.5 | D-GN | 2125 | III | - |
| D | - | - | - | - | - | Not Occupied | D | - | - | - | - | - |
| E | 0.5 | BK/GY | 2130 | I | - | Ignition Control Low Reference Bank 2 | E | 0.5 | BN | 2129 | III | - |
| F | 0.5 | BN/D-BU | 2126 | I | - | Ignition Control (6) | F | 0.5 | L-BU | 2123 | III | - |
| G | 0.5 | VT/WH | 2128 | I | - | Ignition Control (8) | G | 0.5 | PU | 2121 | III | - |
| H | 0.75 | VT/D-BU | 5292 | I | - | Powertrain Main Relay Fused Supply (3) | H | 0.8 | PK | 39 | II | - |

## X171 Engine Harness to Ignition Coil (Even) Harness

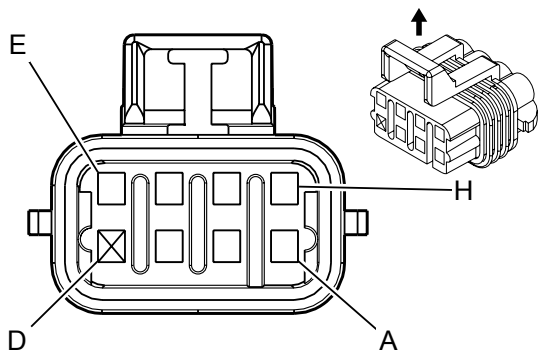


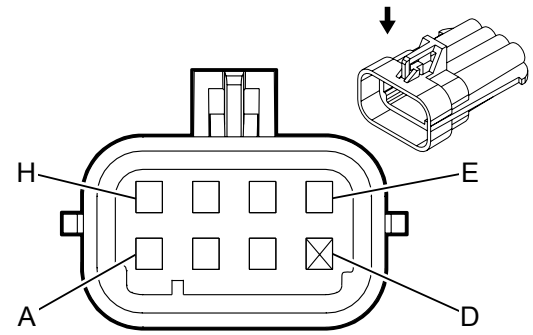


### Connector Part Information

Harness Type: Engine

OEM Connector: 12047938

Service Connector: 13580883

Description: 8-Way F 150 Metri Pack Series, Sealed (L-GY)

### Connector Part Information

Harness Type: Ignition Coil (Even) Jumper

OEM Connector: 15496016

Service Connector: 12102490

Description: 8-Way M 150 Metri Pack Series (GY)

### *Terminal Part Information*

| Terminal Type ID | Terminated Lead | Diagnostic Test Probe | Terminal Removal Tool | Service Terminal | Tray | Core Crimp | Insulation Crimp |
|---|---|---|---|---|---|---|---|
| I | 13575427 | J-35616-14 (GN) | J-38125-12A | 12048074 | 2 | E | 1 |
| II | Pending | J-35616-3 (GY) | J-38125-12A | 12045773 | 2 | E | 1 |
| III | 13575420 | J-35616-3 (GY) | J-38125-12A | 12045773 | 2 | E | 1 |

### *X171 Engine Harness to Ignition Coil (Even) Harness*

| Pin | Size | Color | Circuit | Terminal Type ID | Option | Function | Pin | Size | Color | Circuit | Terminal Type ID | Option |
|---|---|---|---|---|---|---|---|---|---|---|---|---|
| A | 0.75 | BK | 350 | I | - | Ground | A | 0.8 | BK | 151 | II | - |
| B | 0.5 | L-GN/GY | 2127 | I | - | Ignition Control (7) | B | 0.5 | RD | 2127 | III | - |
| C | 0.5 | D-BU/GY | 2125 | I | - | Ignition Control (5) | C | 0.5 | D-GN | 2125 | III | - |
| D | - | - | - | - | - | Not Occupied | D | - | - | - | - | - |
| E | 0.5 | BK/D-BU | 2129 | I | - | Ignition Control Low Reference Bank 1 | E | 0.5 | BN | 2129 | III | - |
| F | 0.5 | L-GN/D-BU | 2123 | I | - | Ignition Control (3) | F | 0.5 | L-BU | 2123 | III | - |
| G | 0.5 | D-BU/VT | 2121 | I | - | Ignition Control (1) | G | 0.5 | PU | 2121 | III | - |
| H | 0.75 | VT/D-BU | 5291 | I | - | Powertrain Main Relay Fused Supply (2) | H | 0.8 | PK | 39 | II | - |

## X185 Chassis Harness to Body Harness

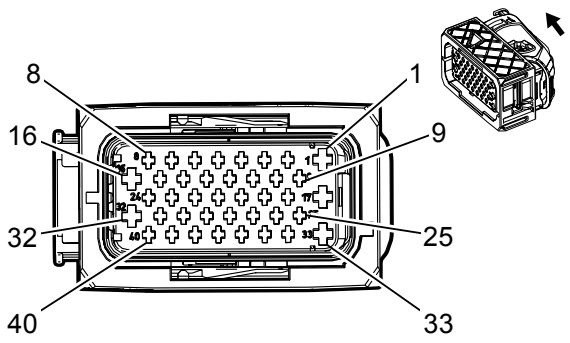


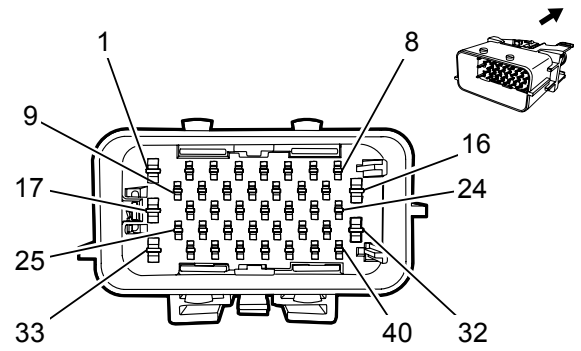


### Connector Part Information

Harness Type: Chassis

OEM Connector: 13965186

Service Connector: 19301818

Description: 40-Way F 1.5 DSQ, 2.8 ATS Series, Sealed

### Connector Part Information

Harness Type: Body

OEM Connector: 13603208

Service Connector: 13576551

Description: 40-Way M 2.8 ATS DSQ 1.5 Series, Sealed

### *Terminal Part Information*

| Terminal Type ID | Terminated Lead | Diagnostic Test Probe | Terminal Removal Tool | Service Terminal | Tray | Core Crimp | Insulation Crimp |
|---|---|---|---|---|---|---|---|
| I | Pending | J-35616-35 (VT) | J-38125-36 | 4-964286-1 | 16 | E | 1 |
| II | 13578884 | J-35616-14 (GN) | J-38125-560 | 964274-2 | 16 | E | 1 |
| III | 13327155 | J-35616-35 (VT) | J-38125-36 | 4-964273-1 | 15 | C | 5 |
| IV | 13327181 | J-35616-14 (GN) | J-38125-560 | 964274-2 | 16 | E | 1 |
| V | 13580827 | J-35616-5 (PU) | J-38125-36 | 1-962915-3 | 15 | E | 1 |
| VI | 13575380 | J-35616-3 (GY) | J-38125-560 | Not Available | Not Available | E | 1 |
| VII | 13578882 | J-35616-3 (GY) | J-38125-560 | Not Available | Not Available | Not Available | Not Available |
| VIII | 13578881 | J-35616-5 (PU) | J-38125-36 | Not Available | Not Available | C | 4 |

### *X185 Chassis Harness to Body Harness*

| Pin | Size | Color | Circuit | Terminal Type ID | Option | Function | Pin | Size | Color | Circuit | Terminal Type ID | Option |
|---|---|---|---|---|---|---|---|---|---|---|---|---|
| 1 | 0.5 | L-GN/BK | 7633 | I | - | Integrated Trailer Brake Controller User Gain Signal | 1 | 0.5 | L-GN/BK | 7633 | V | - |
| 2 | 0.5 | L-GN/BN | 2087 | II | - | Combined Vehicle Inertial Sensor Supply Voltage | 2 | 0.35 | L-GN/BN | 2087 | VII | - |
| 3 | 0.5 | YE | 7635 | II | - | Integrated Trailer Brake Controller Manual Apply Signal | 3 | 0.5 | YE | 7635 | VI | - |
| 4 | 0.5 | D-BU/RD | 7632 | II | - | Integrated Trailer Brake Controller Switch 5 Volt Reference | 4 | 0.5 | D-BU/RD | 7632 | VI | - |

| | | | | | | | | | | | | |
|---|---|---|---|---|---|---|---|---|---|---|---|---|
| 5 | 0.5 | BN | 7634 | II | - | Integrated Trailer Brake Contoller Redundant Manual Apply Signal | 5 | 0.5 | BN | 7634 | VI | - |
| 6 | 0.5 | BK/BN | 7631 | II | - | Integrated Trailer Brake Controller Switch Low Reference | 6 | 0.5 | BK/BN | 7631 | VI | - |
| 7-8 | - | - | - | - | - | Not Occupied | 7-8 | - | - | - | - | - |
| 9 | 0.5 | BN/WH | 2374 | II | - | Object Sensor Supply Voltage | 9 | 0.5 | BN/WH | 2374 | VI | - |
| 10 | - | - | - | - | - | Not Occupied | 10 | - | - | - | - | - |
| 11 | 0.5 | YE | 2375 | II | - | Left Rear Corner Object Sensor Signal | 11 | 0.5 | YE | 2375 | VI | - |
| 12 | 0.5 | YE/D-BU | 2376 | II | - | Left Rear Middle Object Sensor Signal | 12 | 0.5 | YE/D-BU | 2376 | VI | - |
| 13 | 0.5 | YE/VT | 2378 | II | - | Right Rear Corner Object Sensor Signal | 13 | 0.5 | YE/VT | 2378 | VI | - |
| 14 | 0.5 | YE/WH | 2377 | II | - | Right Rear Middle Object Sensor Signal | 14 | 0.5 | YE/WH | 2377 | VI | - |
| 15 | - | - | - | - | - | Not Occupied | 15 | - | - | - | - | - |
| 16 | 0.5 | L-GN/YE | 6846 | I | - | Rear License Lamp Supply Voltage | 16 | 0.5 | L-GN/YE | 6846 | V | - |
| 17 | 0.5 | WH/D-BU | 5986 | I | - | Serial Data Communication Enable | 17 | 0.5 | WH/D-BU | 5986 | V | - |
| 18 | 0.5 | D-BU | 2500 | II | - | High Speed GMLAN Serial Data (+) (1) | 18 | 0.5 | D-BU | 2500 | VI | - |
| 19 | 0.5 | WH | 2501 | II | - | High Speed GMLAN Serial Data (-) (1) | 19 | 0.5 | WH | 2501 | VI | - |
| 20 | 0.5 | VT/YE | 5985 | II | - | Accessory Wakeup Serial Data | 20 | 0.5 | VT/YE | 5985 | VI | - |
| 21 | 0.5 | BK/GY | 2379 | II | - | Object Sensor Low Reference | 21 | 0.5 | BK/GY | 2379 | VI | - |
| 29 | 0.5 | BK | 2550 | II | - | Ground | 29 | 0.75 | BK | 2550 | VI | - |
| 30 | 0.5 | BK | 6974 | II | - | Camera Drain Wire | 30 | 0.5 | BK | 6974 | VI | - |
| 31 | - | - | - | - | - | Not Occupied | 31 | - | - | - | - | - |
| 32 | 2.5 | D-BU | 47 | III | - | Trailer Auxiliary Supply Voltage | 32 | 2.5 | D-BU | 47 | VIII | - |
| 36 | 0.75 | WH/VT | 1430 | IV | - | Exterior Courtesy Lamp Supply Voltage | 36 | 0.75 | WH/VT | 1430 | VI | - |
| 37 | 0.5 | GY/YE | 6972 | II | - | Camera Signal #2 + | 37 | 0.35 | GY/YE | 6972 | VII | - |
| 38 | 0.5 | WH/D-BU | 6973 | II | - | Camera Signal #2 | 38 | 0.35 | WH/D-BU | 6973 | VII | - |
| 39 | - | - | - | - | - | Not Occupied | 39 | - | - | - | - | - |

| | | | | | | | | | | | | |
|---|---|---|---|---|---|---|---|---|---|---|---|---|
| 39 | - | - | - | - | - | Not Occupied | 39 | - | - | - | - | - |
| 40 | 0.5 | L-GN/GY | 817 | II | - | Vehicle Speed Signal | 40 | 0.5 | L-GN/GY | 817 | VI | - |

## X191 Engine Harness to Power Take-Off Jumper Harness

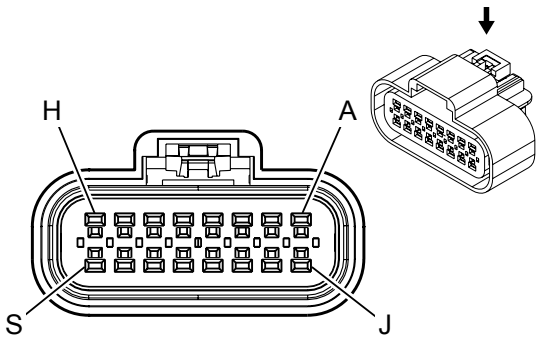


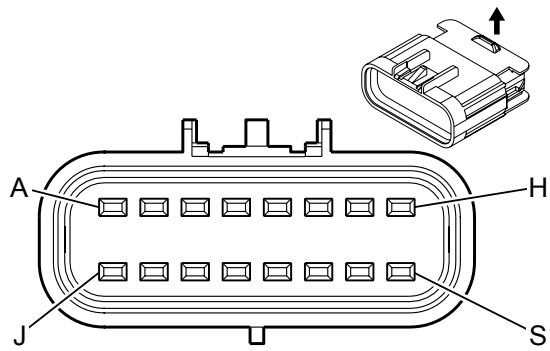


### Connector Part Information

Harness Type: Engine

OEM Connector: 15326863

Service Connector: 19180282

Description: 16-Way F 150 GT Series, Sealed (BK)

### Connector Part Information

Harness Type: Power Take-Off Jumper

OEM Connector: 15326868

Service Connector: 15306364

Description: 16-Way M 150 Series, Sealed (BK)

### *Terminal Part Information*

| Terminal Type ID | Terminated Lead | Diagnostic Test Probe | Terminal Removal Tool | Service Terminal | Tray | Core Crimp | Insulation Crimp |
|---|---|---|---|---|---|---|---|
| I | 13575412 | J-35616-2A (GY) | J-38125-553 | 12191819 | 8 | 2 | 1 |
| II | 13575298 | J-35616-2A (GY) | J-38125-553 | 12191819 | 8 | E | 1 |
| III | 13576363 | J-35616-3 (GY) | J-38125-553 | 15326269 | 19 | E | 4 |

### *X191 Engine Harness to Power Take-Off Jumper Harness*

| Pin | Size | Color | Circuit | Terminal Type ID | Option | Function | Pin | Size | Color | Circuit | Terminal Type ID | Option |
|---|---|---|---|---|---|---|---|---|---|---|---|---|
| A | 0.75 | BN/WH | 6085 | I | - | Power Take Off Remote Engine Start Switch Signal | A | 0.75 | BN/WH | 6085 | III | - |
| B | 0.75 | BN | 6381 | I | - | Power Take Off Relay Engage Signal | B | - | - | - | - | - |
| C | - | - | - | - | - | Not Occupied | C | - | - | - | - | - |
| D | 0.75 | BK | 550 | I | - | Ground | D | - | - | - | - | - |
| E-F | - | - | - | - | - | Not Occupied | E-F | - | - | - | - | - |
| G | 0.75 | YE | 2522 | I | - | Power Take Off Status Signal | G | - | - | - | - | - |
| H | 0.5 | VT/D-BU | 2562 | II | - | Power Take Off Relay Coil Control | H | - | - | - | - | - |
| J | 0.5 | WH/L-GN | 6142 | II | - | Power Take Off Engine Shutdown Signal | J | 0.75 | BN/WH | 6085 | III | - |
| K | 0.75 | RD/VT | 2640 | I | - | Battery Positive Voltage | K | - | - | - | - | - |
| L-M | - | - | - | - | - | Not Occupied | L-M | - | - | - | - | - |

| | | | | | | | | | | | | |
|---|---|---|---|---|---|---|---|---|---|---|---|---|
| N | 0.5 | D-BU/GY | 6089 | II | - | Power Take Off Remote Switch Set Signal (1) | N | - | - | - | - | - |
| R | 0.5 | VT/WH | 239 | II | - | Run/Crank Ignition 1 Voltage | R | - | - | - | - | - |

## X201 Steering Column Harness to Instrument Panel Harness (except E29)

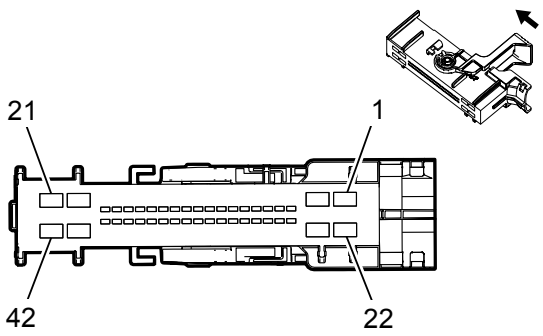


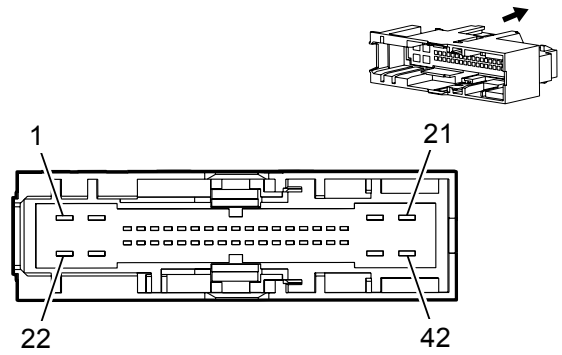


### Connector Part Information

Harness Type:

OEM Connector: 13898441

Service Connector: 19301820

Description: 42 F 1.2, 2.8 Series (GY)

### Connector Part Information

Harness Type: Instrument Panel

OEM Connector: 13898445

Service Connector: 13586232

Description: 42-Way M 0.64, 2.8 Series (GY)

### *Terminal Part Information*

| Terminal Type ID | Terminated Lead | Diagnostic Test Probe | Terminal Removal Tool | Service Terminal | Tray | Core Crimp | Insulation Crimp |
|---|---|---|---|---|---|---|---|
| I | Not Available | Not Available | Not Available | Not Available | Not Available | Not Available | Not Available |
| II | Not Available | J-35616-5 (PU) | J-38125-11A | 7114-4110-02 | 9 | E | C |

### *X201 Steering Column Harness to Instrument Panel Harness (except E29)*

| Pin | Size | Color | Circuit | Terminal Type ID | Option | Function | Pin | Size | Color | Circuit | Terminal Type ID | Option |
|---|---|---|---|---|---|---|---|---|---|---|---|---|
| 1-3 | - | - | - | - | - | Not Occupied | 1-3 | - | - | - | - | - |
| 4 | 0.5 | RD/D-BU | 540 | I | - | Battery Positive Voltage | 4 | 0.5 | RD/D-BU | 540 | I | - |
| 5 | 0.5 | | 391 | I | - | Rear Window Wiper Switch Signal | 5 | | | | | |
| 6-8 | - | - | - | - | - | Not Occupied | 6-8 | - | - | - | - | - |
| 9 | 0.5 | L-GN/BN | 2087 | I | - | Combined Vehicle Inertial Sensor Supply Voltage | 9 | 0.35 | L-GN/BN | 2087 | I | - |
| 10 | 0.5 | D-BU/YE | 6105 | I | - | High Speed GMLAN Serial Data (+) (2) | 10 | 0.5 | D-BU/YE | 6105 | I | - |
| 11 | 0.5 | D-BU/YE | 6105 | I | - | High Speed GMLAN Serial Data (+) (2) | 11 | 0.5 | D-BU/YE | 6105 | I | - |
| 12-15 | - | - | - | - | - | Not Occupied | 12-15 | - | - | - | - | - |
| 16 | 0.5 | L-GN/WH | 111 | I | - | Hazard Switch Signal | 16 | 0.35 | L-GN/WH | 111 | I | - |
| 17 | 0.5 | YE/WH | 816 | I | - | Brake Transmission Shift Interlock Solenoid Control | 17 | 0.5 | YE/WH | 816 | I | - |
| 18-19 | - | - | - | - | - | Not Occupied | 18-19 | - | - | - | - | - |

| | | | | | | | | | | | | |
|---|---|---|---|---|---|---|---|---|---|---|---|---|
| 18-19 | - | - | - | - | - | Not Occupied | 18-19 | - | - | - | - | - |
| 20 | 0.5 | BK | 1050 | I | - | Ground | 20 | 0.5 | BK | 1050 | II | - |
| 21-24 | - | - | - | - | - | Not Occupied | 21-24 | - | - | - | - | - |
| 25 | 0.5 | RD/YE | 3040 | I | - | Battery Positive Voltage | 25 | 0.35 | RD/YE | 3040 | I | - |
| 26-29 | - | - | - | - | - | Not Occupied | 26-29 | - | - | - | - | - |
| 30 | 0.5 | OG | 7527 | I | - | Linear Interconnect Network Bus 5 | 30 | 0.5 | L-GN/WH | 7527 | I | - |
| 31 | 0.5 | WH | 6106 | I | - | High Speed GMLAN Serial Data (-) (2) | 31 | 0.5 | WH | 6106 | I | - |
| 32 | 0.5 | WH | 6106 | I | - | High Speed GMLAN Serial Data (-) (2) | 32 | 0.5 | WH | 6106 | I | - |
| 33 | 0.5 | L-GN/BK | 3894 | I | - | Local Interconnect Network Bus 12 | 33 | 0.5 | L-GN/BK | 3894 | I | - |
| 34-37 | - | - | - | - | - | Not Occupied | 34-37 | - | - | - | - | - |
| 38 | 0.5 | BN | 6136 | I | - | Supply Voltage | 38 | 0.35 | BN | 6136 | I | - |
| 39-40 | - | - | - | - | - | Not Occupied | 39-40 | - | - | - | - | - |
| 41 | 0.5 | VT/WH | 1139 | I | - | Run/Crank Ignition 1 Voltage | 41 | 0.5 | VT/WH | 1139 | II | - |
| 42 | 0.5 | BK/WH | 1851 | I | - | Signal Ground | 42 | 0.5 | BK/WH | 1851 | II | - |

## X205 Instrument Panel Harness to Passenger Air Bag Jumper Harness

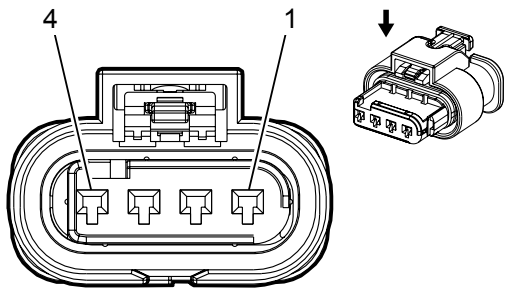


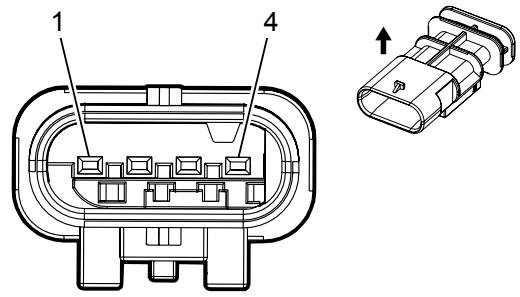


### Connector Part Information

Harness Type: Instrument Panel

OEM Connector: 13854531

Service Connector: 13586137

Description: 4-Way F 1.2 Series, Sealed (YE)

### Connector Part Information

Harness Type: Passenger Air Bag Jumper

OEM Connector: 13854529

Service Connector: 19300591

Description: 4-Way M 1.2 Series, Sealed (YE)

### *Terminal Part Information*

| Terminal Type ID | Terminated Lead | Diagnostic Test Probe | Terminal Removal Tool | Service Terminal | Tray | Core Crimp | Insulation Crimp |
|---|---|---|---|---|---|---|---|
| I | Pending | J-35616-16 (L-GN) | J-38125-22 | Not Available | Not Available | Not Available | Not Available |
| II | Pending | Pending | Pending | Not Available | Not Available | Not Available | Not Available |

### *X205 Instrument Panel Harness to Passenger Air Bag Jumper Harness*

| Pin | Size | Color | Circuit | Terminal Type ID | Option | Function | Pin | Size | Color | Circuit | Terminal Type ID | Option |
|---|---|---|---|---|---|---|---|---|---|---|---|---|
| 1 | 0.35 | YE/OG | 3025 | I | - | Passenger IP Module Stage 1 High Control | 1 | 0.35 | YE/OG | 3025 | II | - |
| 2 | 0.35 | OG/WH | 3024 | I | - | Passenger IP Module Stage 1 Low Control | 2 | 0.35 | OG/WH | 3024 | II | - |

## X215 HVAC Harness to Instrument Panel Harness

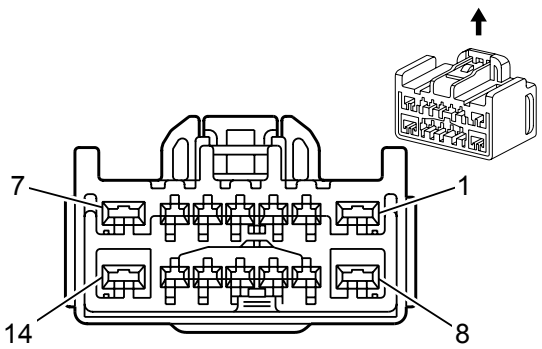


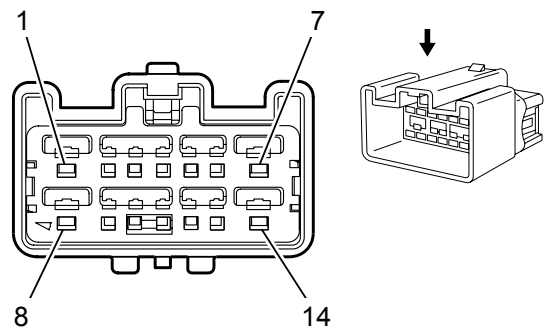


### Connector Part Information

Harness Type: HVAC

OEM Connector: 10847017

Service Connector: 88956524

Description: 14-Way F Hybrid Series (L-GY)

### Connector Part Information

Harness Type: Instrument Panel

OEM Connector: 10846900

Service Connector: Not Available

Description: 14-Way M Hybrid Series (L-GY)

### *Terminal Part Information*

| Terminal Type ID | Terminated Lead | Diagnostic Test Probe | Terminal Removal Tool | Service Terminal | Tray | Core Crimp | Insulation Crimp |
|---|---|---|---|---|---|---|---|
| I | Not Available | Not Available | Not Available | Not Available | Not Available | Not Available | Not Available |
| II | Not Available | J-35616-3 (GY) | J-38125-553 | 7114-4100-08 | 9 | E | C |

### *X215 HVAC Harness to Instrument Panel Harness*

| Pin | Size | Color | Circuit | Terminal Type ID | Option | Function | Pin | Size | Color | Circuit | Terminal Type ID | Option |
|---|---|---|---|---|---|---|---|---|---|---|---|---|
| 1 | - | - | - | - | - | Not Occupied | 1 | - | - | - | - | - |
| 2 | 0.35 | L-GN | 5060 | I | - | Low Speed GMLAN Serial Data | 2 | 0.35 | L-GN | 5060 | II | - |
| 3 | 0.35 | D-GN/YE | 7531 | I | - | Linear Interconnect Network Bus 9 | 3 | 0.35 | L-GN/YE | 7531 | II | - |
| 4 | 0.5 | RD/VT | 3340 | I | - | Battery Positive Voltage | 4 | 0.5 | RD/VT | 3340 | II | - |
| 5 | 0.5 | VT/GY | 539 | I | - | Run/Crank Ignition 1 Voltage | 5 | 0.5 | VT/GY | 539 | II | - |
| 6-8 | - | - | - | - | - | Not Occupied | 6-8 | - | - | - | - | - |
| 9 | 0.35 | BK/WH | 1851 | I | - | Signal Ground | 9 | 0.5<br>0.35 | BK/WH<br>BK/WH | 1851<br>1851 | II | - |
| 10 | 0.35 | BK/YE | 1791 | I | - | Air Temperature Door Control Low Reference | 10 | 0.35 | BK/YE | 1791 | II | - |
| 11 | 0.35 | D-BU/WH | 734 | I | - | Inside Air Temperature Sensor Signal | 11 | 0.35 | D-BU/WH | 734 | II | - |
| 12 | 0.35 | GY | 590 | I | - | Solar Sensor Driver Signal | 12 | 0.35 | GY | 590 | II | - |
| 13 | 0.35 | YE/VT | 1783 | I | - | Twilight Sentinel Delay | 13 | 0.35 | YE/VT | 1783 | II | - |

| | | | | | | | | | | | | |
|---|---|---|---|---|---|---|---|---|---|---|---|---|
| 13 | 0.35 | YE/VT | 1783 | I | - | Twilight Sentinel Delay Signal | 13 | 0.35 | YE/VT | 1783 | II | - |
| 14 | - | - | - | - | - | Not Occupied | 14 | - | - | - | - | - |

## X216 Body Harness to HVAC Harness

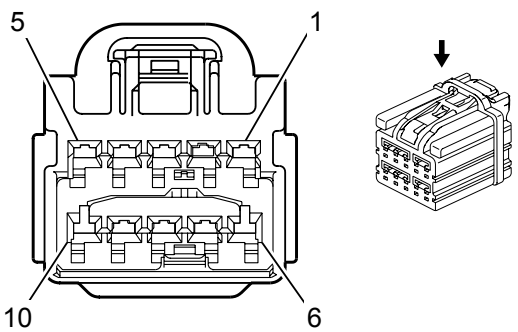


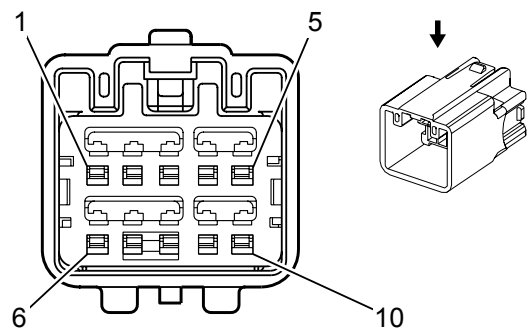


### Connector Part Information

Harness Type: Body

OEM Connector: 10847018

Service Connector: 22708788

Description: 10-Way F Kaizen YESC Series (L-GY)

### Connector Part Information

Harness Type: HVAC

OEM Connector: 10846817

Service Connector: 88988272

Description: 10-Way M Kaizen YESC Series (L-GY)

### *Terminal Part Information*

| Terminal Type ID | Terminated Lead | Diagnostic Test Probe | Terminal Removal Tool | Service Terminal | Tray | Core Crimp | Insulation Crimp |
|---|---|---|---|---|---|---|---|
| I | Not Available | Not Available | Not Available | Not Available | Not Available | Not Available | Not Available |

### *X216 Body Harness to HVAC Harness*

| Pin | Size | Color | Circuit | Terminal Type ID | Option | Function | Pin | Size | Color | Circuit | Terminal Type ID | Option |
|---|---|---|---|---|---|---|---|---|---|---|---|---|
| 1-3 | - | - | - | - | - | Not Occupied | 1-3 | - | - | - | - | - |
| 4 | 0.35 | BN/VT | 193 | I | - | Rear Defog Relay Control | 4 | 0.35 | BN/VT | 193 | I | - |
| 5 | 0.5 | D-BU/BN | 7573 | I | - | Electric Variable Displacement Supply | 5 | 0.5 | L-BU/BN | 7573 | I | - |
| 6 | 0.5 | D-BU/YE | 7574 | I | - | Electric Variable Displacement Control | 6 | 0.5 | D-BU/YE | 7574 | I | - |
| 7-10 | - | - | - | - | - | Not Occupied | 7-10 | - | - | - | - | - |

## X217 Body Harness to HVAC Harness

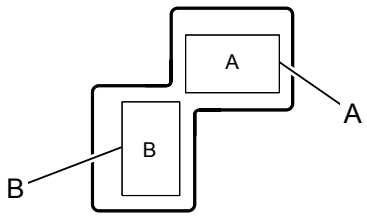


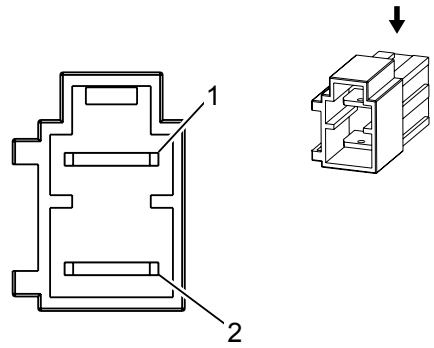


### Connector Part Information

Harness Type: Body

OEM Connector: 10721337

Service Connector: 88953301

Description: 2-Way F 56 Series (BK)

### Connector Part Information

Harness Type: HVAC

OEM Connector: 10722288

Service Connector: Service by Harness - See Part Catalog

Description: 2-Way M 375 Series (BK)

### *Terminal Part Information*

| Terminal Type ID | Terminated Lead | Diagnostic Test Probe | Terminal Removal Tool | Service Terminal | Tray | Core Crimp | Insulation Crimp |
|---|---|---|---|---|---|---|---|
| I | Not Available | J-35616-22 (RD) | J-38125-11A | 7116-3250 | 10 | G | 3 |
| II | Not Available | J-35616-22 (RD) | J-38125-11A | 7116-3250 | 10 | E | 2 |
| III | Not Available | J-35616-22 (RD) | J-38125-11A | 7116-3250 | 10 | Not Available | Not Available |
| IV | Not Available | Not Available | Not Available | Not Available | Not Available | Not Available | Not Available |

### *X217 Body Harness to HVAC Harness*

| Pin | Size | Color | Circuit | Terminal Type ID | Option | Function | Pin | Size | Color | Circuit | Terminal Type ID | Option |
|---|---|---|---|---|---|---|---|---|---|---|---|---|
| 1 | 4 | RD/VT | 542 | I | - | Battery Positive Voltage | 1 | 4 | RD/VT | 542 | IV | - |
| 2 | 10 | RD/GY | 642 | II | - | Battery Positive Voltage | 2 | 10 | RD/GY | 642 | IV | - |

## X225 Body Harness to Instrument Panel Harness

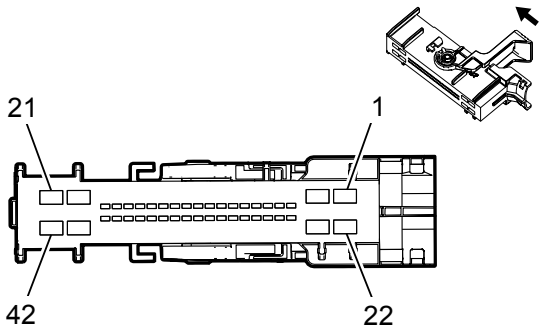


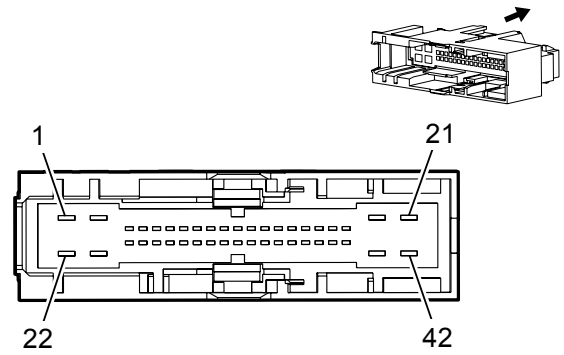


### Connector Part Information

Harness Type: Body

OEM Connector: 13898441

Service Connector: 19301820

Description: 42-Way F 1.2, 2.8 Series (GY)

### Connector Part Information

Harness Type: Instrument Panel

OEM Connector: 13898444

Service Connector: No SDC/FSU

Description: 42-Way M 0.64, 2.8 Series (GY)

### *Terminal Part Information*

| Terminal Type ID | Terminated Lead | Diagnostic Test Probe | Terminal Removal Tool | Service Terminal | Tray | Core Crimp | Insulation Crimp |
|---|---|---|---|---|---|---|---|
| I | Pending | J-35616-35 (VT) | J-38125-11A | 7116-4111-02 | 9 | E | A |
| II | Pending | J-35616-22 (RD) | J-38125-11A | Not Available | Not Available | Not Available | Not Available |
| III | Pending | Pending | Pending | Not Available | Not Available | Not Available | Not Available |

### *X225 Body Harness to Instrument Panel Harness*

| Pin | Size | Color | Circuit | Terminal Type ID | Option | Function | Pin | Size | Color | Circuit | Terminal Type ID | Option |
|---|---|---|---|---|---|---|---|---|---|---|---|---|
| 1 | 0.75 | YE/GY | 1956 | I | - | Left Front Tweeter Speaker (-) | 1 | 0.75<br>0.75 | YE/GY<br>BK | 1956<br>2550 | III | - |
| 2 | 1.5 | BK | 1850 | III | - | Ground | 2 | 0.75 | BK | 1850 | III | - |
| 3 | - | - | - | - | - | Not Occupied | 3 | - | - | - | - | - |
| 4 | 0.5 | WH/BN | 6815 | II | - | Inadvertent Power Control | 4 | 0.5 | D-BU/YE | 6105 | III | - |
| 5 | 0.35 | GY/WH | 3272 | II | - | Remote Function Actuator Supply Voltage | 5 | 0.35 | GY/WH | 3272 | III | - |
| 6 | 0.35 | D-BU/WH | 3275 | II | - | Remote Function Actuator Receive Signal | 6 | 0.35 | D-BU/WH | 3275 | III | - |
| 7 | 0.35 | L-GN/BN | 507 | II | - | Wait To Start Indicator Control | 7 | 0.35<br>0.35 | BK/L-GN<br>L-GN/BN | 552<br>507 | III | - |
| 8 | 0.5<br>0.35 | GY/VT<br>GY/VT | 3998<br>3998 | II | - | MOST Serial Data (+)<br>MOST Serial Data (+) | 8 | 0.5 | GY/VT | 3998 | III | - |
| 11 | 0.5 | WH/L-GN | 3997 | II | - | MOST Serial Data (-) | 11 | 0.5 | WH/L-GN | 3997 | III | - |

| | | | | | | | | | | | |
|---|---|---|---|---|---|---|---|---|---|---|---|
| 11 | 0.5<br>0.35 | WH/L-GN<br>WH/GN | 3997<br>3997 | II | - | MOST Serial Data (-)<br>MOST Serial Data (-) | 11 | 0.5 | WH/L-GN | 3997 | III | - |
| 12 | 0.5 | BN/D-BU | 118 | II | - | Left Front Speaker Signal (-) (1) | 12 | 0.5 | BN/D-BU | 118 | III | - |
| 13 | - | - | - | - | - | Not Occupied | 13 | - | - | - | - | - |
| 14 | 0.5 | L-GN | 199 | II | - | Left Rear Speaker (+) | 14 | 0.5 | L-GN | 199 | III | - |
| 17 | 0.35 | D-BU/GY | 636 | III | - | Outside Ambient Air Temperature Sensor Signal | 17 | 0.35 | D-BU/GY | 636 | III | - |
| 18 | - | - | - | - | - | Not Occupied | 18 | - | - | - | - | - |
| 19 | 0.35 | BK/D-BU | 61 | III | - | Outside Ambient Temperature Sensor Low Reference | 19 | 0.35 | BK/D-BU | 61 | III | - |
| 20 | 0.5<br>0.75 | BN/D-BU<br>BN/D-BU | 118<br>118 | III | - | Left Front Speaker Signal (-) (1)<br>Left Front Speaker Signal (-) (1) | 20 | 0.75 | BN/D-BU | 118 | III | - |
| 21 | - | - | - | - | - | Not Occupied | 21 | - | - | - | - | - |
| 22 | 0.75 | YE/D-BU | 1856 | I | - | Left Front Tweeter Speaker (+) | 22 | 0.75<br>0.35 | YE/D-BU<br>BN/YE | 1856<br>780 | III | - |
| 23 | - | - | - | - | - | Not Occupied | 23 | - | - | - | - | - |
| 24 | 0.35 | L-GN/WH | 3438 | II | - | Exhaust Brake Switch Signal | 24 | 0.35 | L-GN/WH | 3438 | III | - |
| 25 | 0.35 | BN/WH | 419 | II | - | Check Engine Indicator Control | 25 | 0.35 | BN/WH | 419 | III | - |
| 26 | 0.35 | YE/L-GN | 3274 | II | - | Remote Function Actuator Transmit Signal | 26 | 0.35 | YE/L-GN | 3274 | III | - |
| 27 | 0.35 | GY | 3273 | II | - | Remote Function Actuator Return | 27 | 0.35 | GY | 3273 | III | - |
| 28 | 0.5 | BK | 1850 | II | - | Ground | 28 | 0.5 | BK | 1850 | III | - |
| 29 | 0.5<br>0.35 | WH/L-GN<br>WH/GN | 3997<br>3997 | II | - | MOST Serial Data (-)<br>MOST Serial Data (-) | 29 | 0.5 | WH/L-GN | 3997 | III | - |
| 30 | 0.35 | L-GN/WH | 488 | II | - | Power Take Off Enable Switch | 30 | 0.35 | L-GN/WH | 488 | III | - |
| 31 | 0.35 | BN/L-GN | 4311 | II | - | Power Take Off Enable In Cab Switch Normally Closed Signal | 31 | 0.35 | BN/L-GN | 4311 | III | - |
| 32 | 0.5<br>0.35 | GY/VT<br>GY/VT | 3998<br>3998 | II | - | MOST Serial Data (+)<br>MOST Serial Data (+) | 32 | 0.5 | GY/VT | 3998 | III | - |
| 33 | 0.5 | D-BU | 201 | II | - | Left Front Speaker (+) (1) | 33 | 0.5 | D-BU | 201 | III | - |

| | | | | | | | | | | | | |
|---|---|---|---|---|---|---|---|---|---|---|---|---|
| 34 | 0.5 | D-BU/YE | 68 | II | - | Low Coolant Level Indicator Control | 34 | 0.5<br>0.5 | WH/D-BU<br>D-BU/YE | 3691<br>68 | III | - |
| 35 | 0.5 | L-GN/BK | 116 | II | - | Left Rear Speaker Signal (-) | 35 | 0.5 | L-GN/BK | 116 | III | - |
| 36 | 0.5 | L-GN/YE | 2081 | II | - | Exhaust Brake Switch Control | 36 | 0.5<br>0.5 | D-BU/YE<br>L-GN/YE | 6105<br>2081 | III | - |
| 37 | - | - | - | - | - | Not Occupied | 37 | - | - | - | - | - |
| 38 | 0.35 | L-GN/BN | 2087 | II | - | Combined Vehicle Inertial Sensor Supply Voltage | 38 | 0.35 | L-GN/BN | 2087 | III | - |
| 39 | - | - | - | - | - | Not Occupied | 39 | - | - | - | - | - |
| 40 | 0.5 | L-GN/GY | 6135 | II | - | Linear Interconnect Network Bus 4 | 40 | 0.35<br>0.5 | GY/RD<br>L-GN/GY | 598<br>6135 | III | - |
| 41 | 0.5<br>0.75 | D-BU<br>D-BU | 201<br>201 | III | - | Left Front Speaker (+) (1)<br>Left Front Speaker (+) (1) | 41 | 0.75 | D-BU | 201 | III | - |
| 42 | 0.35 | D-BU/YE | 6844 | III | - | ABS/TCS Hill Descent Control Switch Signal | 42 | 0.35<br>2.5 | D-BU/YE<br>BK | 6844<br>1050 | III | - |

## X275 Instrument Panel Harness to Body Harness

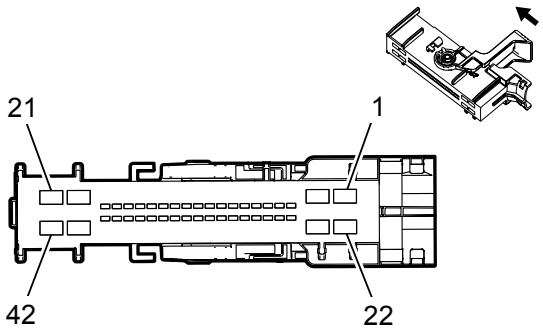


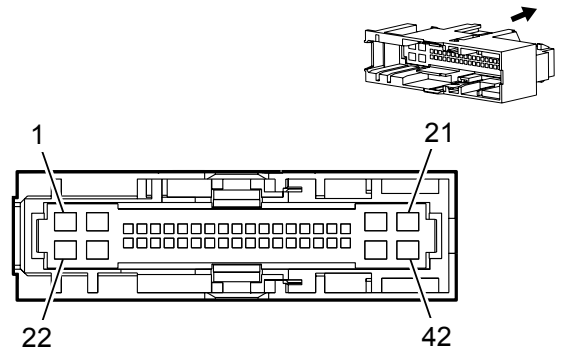


### Connector Part Information

Harness Type: Instrument Panel

OEM Connector: 13898440

Service Connector: No SDC/FSU

Description: 42-Way F 1.2, 2.8 Series (YE)

### Connector Part Information

Harness Type: Body

OEM Connector: 13898442

Service Connector: No SDC/FSU

Description: 42-Way M 0.64, 2.8 Series (GY)

### *Terminal Part Information*

| Terminal Type ID | Terminated Lead | Diagnostic Test Probe | Terminal Removal Tool | Service Terminal | Tray | Core Crimp | Insulation Crimp |
|---|---|---|---|---|---|---|---|
| I | Pending | Pending | Pending | Not Available | Not Available | Not Available | Not Available |
| II | Pending | J-35616-22 (RD) | J-38125-11A | Not Available | Not Available | Not Available | Not Available |
| III | Pending | J-35616-16 (L-GN) | J-38125-12A | Not Available | Not Available | Not Available | Not Available |
| IV | Pending | J-35616-42 (RD) | J-38125-11A | Not Available | Not Available | Not Available | Not Available |

### *X275 Instrument Panel Harness to Body Harness*

| Pin | Size | Color | Circuit | Terminal Type ID | Option | Function | Pin | Size | Color | Circuit | Terminal Type ID | Option |
|---|---|---|---|---|---|---|---|---|---|---|---|---|
| 1 | 0.75 | VT/BN | 1952 | I | - | Right Front Tweeter Speaker (-) | 1 | 0.75 | VT/BN | 1952 | I | - |
| 2 | - | - | - | - | - | Not Occupied | 2 | - | - | - | - | - |
| 3 | 0.35 | D-BU | 2060 | II | - | Auxiliary Detection Signal | 3 | 0.35 | D-BU | 2060 | I | - |
| 4 | 0.5 | BARE | 5842 | II | - | Auxiliary Audio Screen (2) | 4 | 0.5 | BARE | 5842 | I | - |
| 5 | 0.35 | VT | 5843 | II | - | Auxiliary Audio Common Signal | 5 | 0.35 | VT | 5843 | I | - |
| 6 | 0.35 | GY | 5839 | II | - | Left Auxiliary Audio Signal (2) | 6 | 0.35 | GY | 5839 | I | - |
| 7 | 0.35 | L-GN | 5841 | II | - | Right Auxiliary Audio Signal (2) | 7 | 0.35 | L-GN | 5841 | I | - |
| 8 | 0.35 | GY/YE | 6972 | II | - | Camera Signal #2 + | 8 | 0.35 | GY/YE | 6972 | I | - |
| 9 | 0.35 | WH/D-BU | 6973 | II | - | Camera Signal #2 - | 9 | 0.35 | WH/D-BU | 6973 | I | - |

| | | | | | | | | | | | | |
|---|---|---|---|---|---|---|---|---|---|---|---|---|
| 10 | - | - | - | - | - | Not Occupied | 10 | - | - | - | - | - |
| 11 | 0.35 | WH/VT | 3999 | II | - | MOST Control | 11 | 0.35 | WH/VT | 3999 | I | - |
| 12 | 0.5 | YE/BK | 117 | II | - | Right Front Speaker Signal (-) (1) | 12 | 0.5 | YE/BK | 117 | I | - |
| 13 | 0.5 | BN/WH | 1429 | II | - | Standing Lamp Relay Control | 13 | 0.5 | BN/WH | 1429 | I | - |
| 14 | 0.5 | WH | 46 | II | - | Right Rear Speaker (+) | 14 | 0.5 | WH | 46 | I | - |
| 15 | 0.35 | YE/OG | 3025 | III | - | Passenger IP Module Stage 1 High Control | 15 | 0.35 | YE/OG | 3025 | I | - |
| 16 | 0.35 | OG/WH | 3024 | III | - | Passenger IP Module Stage 1 Low Control | 16 | 0.35 | OG/WH | 3024 | I | - |
| 17 | 0.35 | GY/OG | 3027 | III | - | Passenger IP Module Stage 2 High Control | 17 | 0.35 | GY/OG | 3027 | I | - |
| 18 | 0.35 | OG/VT | 3026 | III | - | Passenger IP Module Stage 2 Low Control | 18 | 0.35 | OG/VT | 3026 | I | - |
| 19 | - | - | - | - | - | Not Occupied | 19 | - | - | - | - | - |
| 20 | 0.75 | YE/BK | 117 | I | - | Right Front Speaker Signal (-) (1) | 20 | 0.75<br>0.5 | YE/BK<br>YE/BK | 117<br>117 | I | - |
| 21 | - | - | - | - | - | Not Occupied | 21 | - | - | - | - | - |
| 22 | 0.75 | BN/L-GN | 1852 | I | - | Right Front Tweeter Speaker (+) | 22 | 0.75 | BN/L-GN | 1852 | I | - |
| 23 | 0.5<br>0.35 | WH/D-BU<br>WH/D-BU | 5986<br>5986 | I | - | Serial Data Communication Enable<br>Serial Data Communication Enable | 23 | 0.5 | WH/D-BU | 5986 | I | - |
| 24 | - | - | - | - | - | Not Occupied | 24 | - | - | - | - | - |
| 25 | 0.5 | L-GN | 5060 | II | - | Low Speed GMLAN Serial Data | 25 | 0.5 | L-GN | 5060 | I | - |
| 26-28 | - | - | - | - | - | Not Occupied | 26-28 | - | - | - | - | - |
| 29 | 0.35 | BARE | 6974 | II | - | Camera Drain Wire | 29 | 0.35 | BARE | 6974 | I | - |
| 30 | 0.35 | YE | 6812 | II | - | Out of Park Signal | 30 | 0.35 | YE | 6812 | I | - |
| 31-32 | - | - | - | - | - | Not Occupied | 31-32 | - | - | - | - | - |
| 33 | 0.5 | YE | 200 | II | - | Right Front Speaker (+) (1) | 33 | 0.5 | YE | 200 | I | - |
| 34 | - | - | - | - | - | Not Occupied | 34 | - | - | - | - | - |
| 35 | 0.5 | D-BU/BK | 115 | II | - | Right Rear Speaker Signal (-) | 35 | 0.5 | D-BU/BK | 115 | I | - |
| 36 | 0.35 | D-BU/OG | 7328 | II | - | Passenger IP Module Disable Switch Return | 36 | 0.35 | D-BU/OG | 7328 | I | - |

| | | | | | | | | | | | | |
|---|---|---|---|---|---|---|---|---|---|---|---|---|
| 37 | 0.35 | VT/OG | 371 | II | - | Passenger IP Module Disable Switch Signal | 37 | 0.35 | VT/OG | 371 | I | - |
| 38-40 | - | - | - | - | - | Not Occupied | 38-40 | - | - | - | - | - |
| 41 | 0.75 | YE | 200 | I | - | Right Front Speaker (+) (1) | 41 | 0.5<br>0.75 | YE<br>YE | 200<br>200 | I | - |
| 42 | - | - | - | - | - | Not Occupied | 42 | - | - | - | - | - |

## X275 Instrument Panel Harness to Body Harness

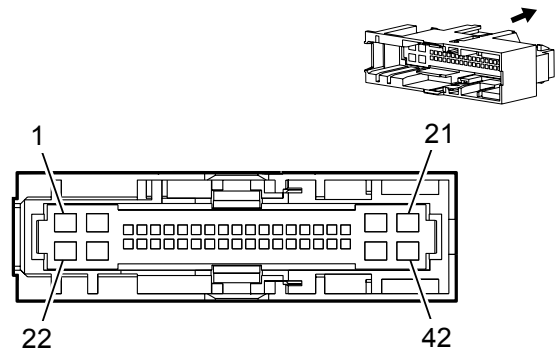


### Connector Part Information

Harness Type: Instrument Panel

OEM Connector: 33119942

Service Connector: Not Available

Description:

### Connector Part Information

Harness Type: Body

OEM Connector: 13898442

Service Connector: 13586235

Description: 42-Way M 0.64, 2.8 Series (YE)

Harness Type: Body

OEM Connector: 13898442

Service Connector: No SDC/FSU

Description: 42-Way M 0.64, 2.8 Series (YE)

### *Terminal Part Information*

| Terminal Type ID | Terminated Lead | Diagnostic Test Probe | Terminal Removal Tool | Service Terminal | Tray | Core Crimp | Insulation Crimp |
|---|---|---|---|---|---|---|---|
| I | Not Available | Not Available | Not Available | Not Available | Not Available | Not Available | Not Available |
| II | Not Available | J-35616-22 (RD) | J-38125-11A | Not Available | Not Available | Not Available | Not Available |
| III | Not Available | J-35616-16 (L-GN) | J-38125-12A | Not Available | Not Available | Not Available | Not Available |
| IV | Not Available | J-35616-42 (RD) | J-38125-11A | Not Available | Not Available | Not Available | Not Available |

### *X275 Instrument Panel Harness to Body Harness*

| Pin | Size | Color | Circuit | Terminal Type ID | Option | Function | Pin | Size | Color | Circuit | Terminal Type ID | Option |
|---|---|---|---|---|---|---|---|---|---|---|---|---|
| 1 | 0.75 | VT/BN | 1952 | I | - | Right Front Tweeter Speaker (-) | 1 | 0.75 | VT/BN | 1952 | I | - |
| 2 | - | - | - | - | - | Not Occupied | 2 | - | - | - | - | - |
| 3 | 0.35 | D-BU | 2060 | II | - | Auxiliary Detection Signal | 3 | 0.5<br>0.35 | D-BU<br>D-BU | 2060<br>2060 | I | - |
| 4 | 0.5 | Bare | 5842 | II | - | Auxiliary Audio Screen (2) | 4 | 0.5 | Bare | 5842 | I | - |
| 5 | 0.35 | VT | 5843 | II | - | Auxiliary Audio Common Signal | 5 | 0.5<br>0.35 | VT<br>VT | 5843<br>5843 | I | - |
| 6 | 0.35 | GY | 5839 | II | - | Left Auxiliary Audio Signal (2) | 6 | 0.5<br>0.35 | GY<br>GY | 5839<br>5839 | I | - |
| 7 | 0.35 | L-GN | 5841 | II | - | Right Auxiliary Audio | 7 | 0.5 | L-GN | 5841 | I | - |

| | | | | | | | | | | | | |
|---|---|---|---|---|---|---|---|---|---|---|---|---|
| 7 | 0.35 | L-GN | 5841 | II | - | Right Auxiliary Audio Signal (2) | 7 | 0.5<br>0.35 | L-GN<br>L-GN | 5841<br>5841 | I | - |
| 8 | 0.35 | GY/YE | 6972 | II | - | Camera Signal #2 + | 8 | 0.35 | GY/YE | 6972 | I | - |
| 9 | 0.35 | WH/D-BU | 6973 | II | - | Camera Signal #2 | 9 | 0.35 | WH/D-BU | 6973 | I | - |
| 10 | - | - | - | - | - | Not Occupied | 10 | - | - | - | - | - |
| 11 | 0.35 | WH/VT | 3999 | II | - | MOST Control | 11 | 0.35 | WH/VT | 3999 | I | - |
| 12 | 0.5 | YE/BK | 117 | II | - | Right Front Speaker Signal (-) (1) | 12 | 0.5 | YE/BK | 117 | I | - |
| 13 | 0.5 | BN/WH | 1429 | II | - | Standing Lamp Relay Control | 13 | 0.5 | BN/WH | 1429 | I | - |
| 14 | 0.5 | WH | 46 | II | - | Right Rear Speaker (+) | 14 | 0.5 | WH | 46 | I | - |
| 15 | 0.35 | YE/OG | 3025 | III | - | Passenger IP Module Stage 1 High Control | 15 | 0.35 | YE/OG | 3025 | I | - |
| 16 | 0.35 | OG/WH | 3024 | III | - | Passenger IP Module Stage 1 Low Control | 16 | 0.35 | OG/WH | 3024 | I | - |
| 17 | 0.35 | GY/OG | 3027 | III | - | Passenger IP Module Stage 2 High Control | 17 | 0.35 | GY/OG | 3027 | I | - |
| 18 | 0.35 | OG/VT | 3026 | III | - | Passenger IP Module Stage 2 Low Control | 18 | 0.35 | OG/VT | 3026 | I | - |
| 19 | - | - | - | - | - | Not Occupied | 19 | - | - | - | - | - |
| 20 | 0.75 | YE/BK | 117 | I | - | Right Front Speaker Signal (-) (1) | 20 | 0.75<br>0.5 | YE/BK<br>YE/BK | 117<br>117 | I | - |
| 21 | 1.5 | VT/YE | 243 | I | - | Accessory Voltage | 21 | 1.5 | VT/YE | 243 | I | - |
| 22 | 0.75 | BN/L-GN | 1852 | I | - | Right Front Tweeter Speaker (+) | 22 | 0.75 | BN/L-GN | 1852 | I | - |
| 23 | 0.35<br>0.5 | WH/D-BU<br>WH/D-BU | 5986<br>5986 | I | - | Serial Data Communication Enable<br>Serial Data Communication Enable | 23 | 0.5 | WH/D-BU | 5986 | I | - |
| 24 | - | - | - | - | - | Not Occupied | 24 | - | - | - | - | - |
| 25 | 0.5 | L-GN | 5060 | II | - | Low Speed GMLAN Serial Data | 25 | 0.5 | L-GN | 5060 | I | - |
| 26-28 | - | - | - | - | - | Not Occupied | 26-28 | - | - | - | - | - |
| 29 | 0.35 | Bare | 6974 | II | - | Camera Drain Wire | 29 | 0.35 | Bare | 6974 | I | - |
| 30 | 0.35 | YE | 6812 | II | - | Out of Park Signal | 30 | 0.35 | YE | 6812 | I | - |
| 31-32 | - | - | - | - | - | Not Occupied | 31-32 | - | - | - | - | - |
| 33 | 0.5 | YE | 200 | II | - | Right Front Speaker (+) (1) | 33 | 0.5 | YE | 200 | I | - |
| 34 | - | - | - | - | - | Not Occupied | 34 | - | - | - | - | - |

| | | | | | | | | | | | | |
|---|---|---|---|---|---|---|---|---|---|---|---|---|
| 34 | - | - | - | - | - | Not Occupied | 34 | - | - | - | - | - |
| 35 | 0.5 | D-BU/BK | 115 | II | - | Right Rear Speaker Signal (-) | 35 | 0.5 | D-BU/BK | 115 | I | - |
| 36 | 0.35 | D-BU/OG | 7328 | II | - | Passenger IP Module Disable Switch Return | 36 | 0.35 | D-BU/OG | 7328 | I | - |
| 37 | 0.35 | VT/OG | 371 | II | - | Passenger IP Module Disable Switch Signal | 37 | 0.35 | VT/OG | 371 | I | - |
| 38-40 | - | - | - | - | - | Not Occupied | 38-40 | - | - | - | - | - |
| 41 | 0.75 | YE | 200 | I | - | Right Front Speaker (+) (1) | 41 | 0.75<br>0.5 | YE<br>YE | 200<br>200 | I | - |

## X300 Instrument Panel Harness to Center Console Harness

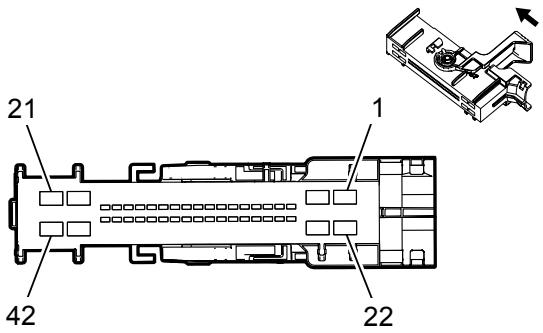


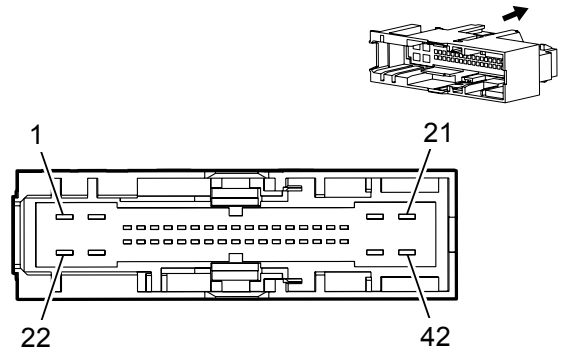


### Connector Part Information

Harness Type: Instrument Panel

OEM Connector: 15509841

Service Connector: Not Available

Description: 42-Way F 1.2, 2.8 Series (GY)

### Connector Part Information

Harness Type: Center Console

OEM Connector: 13898445

Service Connector: 13586232

Description: 42-Way M 0.64, 2.8 Series (GY)

### *Terminal Part Information*

| Terminal Type ID | Terminated Lead | Diagnostic Test Probe | Terminal Removal Tool | Service Terminal | Tray | Core Crimp | Insulation Crimp |
|---|---|---|---|---|---|---|---|
| I | Not Available | Not Available | Not Available | Not Available | Not Available | Not Available | Not Available |
| II | Not Available | J-35616-22 (RD) | J-38125-11A | Not Available | Not Available | Not Available | Not Available |
| III | Not Available | J-35616-5 (PU) | J-38125-11A | 7114-4112-02 | 9 | Not Available | Not Available |
| IV | Not Available | J-35616-5 (PU) | J-38125-11A | 7114-4112-02 | 9 | C | D |

### *X300 Instrument Panel Harness to Center Console Harness*

| Pin | Size | Color | Circuit | Terminal Type ID | Option | Function | Pin | Size | Color | Circuit | Terminal Type ID | Option |
|---|---|---|---|---|---|---|---|---|---|---|---|---|
| 1 | 1.5<br>1.5 | VT/YE<br>RD/D-BU | 243<br>840 | I | - | Accessory Voltage<br>Battery Positive Voltage | 1 | 1.5<br>1.5 | RD/D-BU<br>VT/YE | 840<br>243 | III | - |
| 2 | 1.5 | VT/YE | 143 | I | - | Accessory Voltage | 2 | 1.5 | VT/YE | 143 | III | - |
| 3 | - | - | - | - | - | Not Occupied | 3 | - | - | - | - | - |
| 4 | 0.35 | D-BU | 2060 | II | - | Auxiliary Detection Signal | 4 | 0.35 | D-BU | 2060 | I | - |
| 5 | 0.35 | BK | 2550 | II | - | Ground | 5 | 0.35 | BK | 2550 | I | - |
| 6-12 | - | - | - | - | - | Not Occupied | 6-12 | - | - | - | - | - |
| 13 | 0.5 | Bare | 5842 | II | - | Auxiliary Audio Screen (2) | 13 | 0.5 | Bare | 5842 | I | - |
| 14 | 0.35 | VT | 5843 | II | - | Auxiliary Audio Common Signal | 14 | 0.35 | VT | 5843 | I | - |
| 15 | 0.5 | Bare | 2057 | II | - | Auxiliary Video Low Signal | 15 | 0.5 | Bare | 2057 | I | - |

| | | | | | | | | | | | | |
|---|---|---|---|---|---|---|---|---|---|---|---|---|
| 16 | 0.35 | L-GN/WH | 3355 | II | - | Left Rear Seat Audio Headphone Signal | 16 | 0.35 | L-GN/WH | 3355 | I | - |
| 17 | 0.5 | Bare | 3354 | II | - | Rear Seat Audio Headphone Drain Wire | 17 | 0.5 | Bare | 3354 | I | - |
| 18 | 0.35 | YE | 2059 | II | - | Left Auxiliary Audio Signal (1) | 18 | 0.35 | YE | 2059 | I | - |
| 19 | 0.5 | Bare | 5345 | II | - | Auxiliary Audio Drain Wire (1) | 19 | 0.5 | Bare | 5345 | I | - |
| 20-22 | - | - | - | - | - | Not Occupied | 20-22 | - | - | - | - | - |
| 23 | 2.5<br>1.5 | BK<br>BK | 1050<br>1050 | I | - | Ground<br>Ground | 23 | 1.5<br>2.5 | BK<br>BK | 1050<br>1050 | III | - |
| 24 | 0.75 | RD/VT | 340 | I | - | Battery Positive Voltage | 24 | 0.75 | RD/VT | 340 | I | - |
| 25-27 | - | - | - | - | - | Not Occupied | 25-27 | - | - | - | - | - |
| 28 | 0.5 | WH/BN | 6815 | II | - | Inadvertent Power Control | 28 | 0.5 | WH/BN | 6815 | I | - |
| 29-33 | - | - | - | - | - | Not Occupied | 29-33 | - | - | - | - | - |
| 34 | 0.35 | L-GN | 5841 | II | - | Right Auxiliary Audio Signal (2) | 34 | 0.35 | L-GN | 5841 | I | - |
| 35 | 0.35 | GY | 5839 | II | - | Left Auxiliary Audio Signal (2) | 35 | 0.35 | GY | 5839 | I | - |
| 36 | 0.35 | YE | 2056 | II | - | Auxiliary Video High Signal | 36 | 0.35 | YE | 2056 | I | - |
| 37 | 0.35 | BN/GY | 3357 | II | - | Right Rear Seat Audio Headphone Signal | 37 | 0.35 | BN/GY | 3357 | I | - |
| 38 | 0.35 | D-BU/VT | 3356 | II | - | Rear Seat Audio Headphone Common Signal | 38 | 0.35 | D-BU/VT | 3356 | I | - |
| 39 | 0.35 | WH | 2058 | II | - | Right Auxiliary Audio Signal (1) | 39 | 0.35 | WH | 2058 | I | - |
| 40 | 0.35 | BN | 3374 | II | - | Auxiliary Audio Common Signal (2) | 40 | 0.35 | BN | 3374 | I | - |
| 41 | - | - | - | - | - | Not Occupied | 41 | - | - | - | - | - |
| 42 | 0.75 | RD/VT | 340 | I | - | Battery Positive Voltage | 42 | 0.75 | RD/VT | 340 | III | - |

## X305 Instrument Panel Harness to Headliner Harness

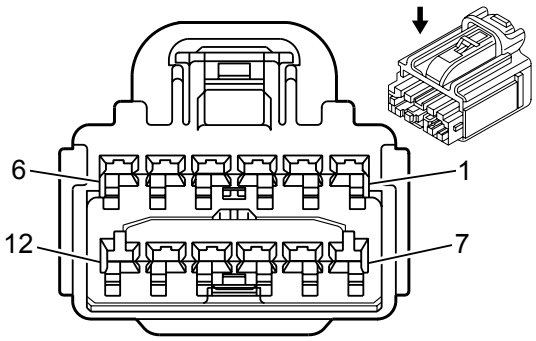


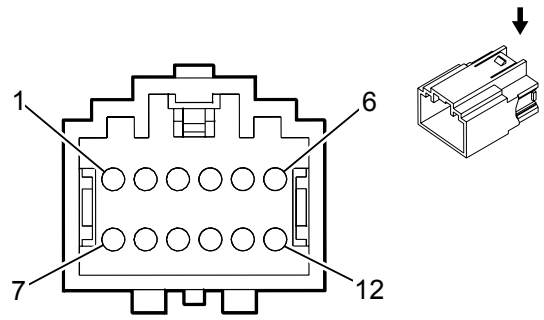


### Connector Part Information

Harness Type: Instrument Panel

OEM Connector: 13507762

Service Connector: Not Available

Description: 12-Way F YESC Kaizen Series (L-GY)

### Connector Part Information

Harness Type: Headliner

OEM Connector: 13507705

Service Connector: 88988266

Description: 12-Way M 1.5 Series (L-GY)

### *Terminal Part Information*

| Terminal Type ID | Terminated Lead | Diagnostic Test Probe | Terminal Removal Tool | Service Terminal | Tray | Core Crimp | Insulation Crimp |
|---|---|---|---|---|---|---|---|
| I | Not Available | Not Available | Not Available | Not Available | Not Available | Not Available | Not Available |
| II | Not Available | J-35616-3 (GY) | J-38125-553 | 7114-4100-08 | 9 | E | C |
| III | Not Available | J-35616-3 (GY) | J-38125-560 | Not Available | Not Available | Not Available | Not Available |

### *X305 Instrument Panel Harness to Headliner Harness*

| Pin | Size | Color | Circuit | Terminal Type ID | Option | Function | Pin | Size | Color | Circuit | Terminal Type ID | Option |
|---|---|---|---|---|---|---|---|---|---|---|---|---|
| 1 | 0.5<br>0.35 | BK<br>BK | 1050<br>2550 | I | - | Ground<br>Ground | 1 | 0.5<br>0.75<br>0.5 | BK<br>BK<br>BK/WH | 2550<br>1050<br>2550 | II | - |
| 2 | 0.75 | WH/VT | 1430 | I | - | Exterior Courtesy Lamp Supply Voltage | 2 | 0.75 | WH/VT | 1430 | III | - |
| 3 | 0.35<br>0.35 | BK/BN<br>GY/L-GN | 654<br>328 | I | - | Cellular Telephone Microphone Low Reference<br>Interior Lamp Defeat Switch Signal | 3 | 0.35<br>0.35 | BK/BN<br>GY/L-GN | 654<br>328 | II | - |
| 4 | 0.35 | D-BU | 655 | I | - | Cellular Telephone Microphone Signal | 4 | 0.35 | D-BU | 655 | II | - |
| 5 | 0.5 | RD/L-GN | 1540 | I | - | Battery Positive Voltage | 5 | 0.5 | RD/L-GN | 1540 | II | - |
| 6-8 | - | - | - | - | - | Not Occupied | 6-8 | - | - | - | - | - |
| 9 | 0.5 | VT/L-GN | 7558 | I | - | LED Ambient Lighting Control 2 | 9 | 0.35 | VT/L-GN | 7558 | II | - |
| 10 | 0.5<br>0.35 | YE<br>L-GN/YE | 6817<br>7066 | I | - | LED Backlight Dimming Control | 10 | 0.5<br>0.35 | YE<br>L-GN/YE | 6817<br>7066 | II | - |

| | | | | | | | | | | | | |
|---|---|---|---|---|---|---|---|---|---|---|---|---|
| | 0.35 | L-GN/YE | 7066 | | | Control<br>Entertainment Remote Enable Signal | | 0.35 | L-GN/YE | 7066 | | |
| 11-12 | - | - | - | - | - | Not Occupied | 11-12 | - | - | - | - | - |

## X310 Driver Seat Cushion Harness to Body Harness

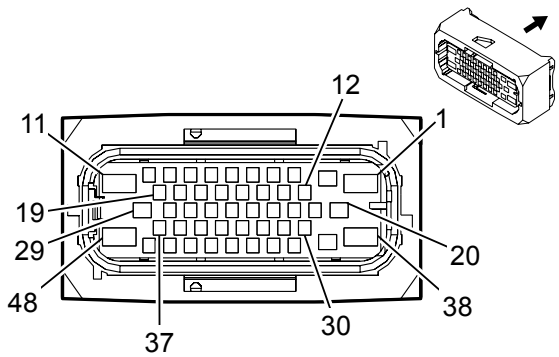


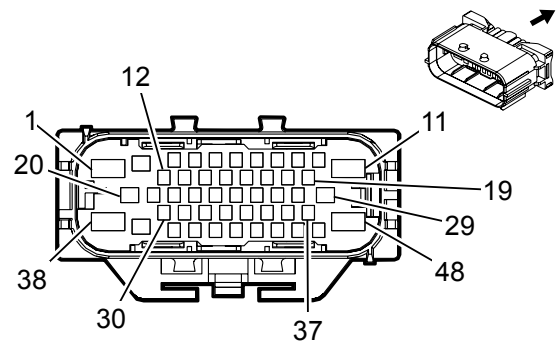


### Connector Part Information

Harness Type: Driver Seat Cushion

OEM Connector: 15509611

Service Connector: Service by Harness - See Part Catalog

Description: 48-Way F 1.5 MCP, 2.8 JPT, 6.3 MCP Series, Sealed (YE)

Harness Type: Driver Seat Cushion

OEM Connector: 15509590

Service Connector: Service by Harness - See Part Catalog

Description: 48-Way F 1.5 MCP, 2.8 JPT, 6.3 MCP Series, Sealed (YE)

### Connector Part Information

Harness Type: Body

OEM Connector: 15507907

Service Connector: Not Available

Description: 48-Way M 1.5 MCP, 2.8 JPT, 6.3 MCP Series, Sealed (YE)

### *Terminal Part Information*

| Terminal Type ID | Terminated Lead | Diagnostic Test Probe | Terminal Removal Tool | Service Terminal | Tray | Core Crimp | Insulation Crimp |
|---|---|---|---|---|---|---|---|
| I | Not Available | J-35616-64B (L-BU) | J-38125-215A | Not Available | Not Available | Not Available | Not Available |
| II | Not Available | Not Available | Not Available | Not Available | Not Available | Not Available | Not Available |
| III | 13327155 | J-35616-35 (VT) | J-38125-36 | 4-964273-1 | 15 | C | 5 |
| IV | 13578881 | J-35616-5 (PU) | J-38125-36 | Not Available | Not Available | C | 4 |
| V | 13575380 | J-35616-3 (GY) | J-38125-560 | Not Available | Not Available | E | 1 |
| VI | 13578882 | J-35616-3 (GY) | J-38125-560 | Not Available | Not Available | Not Available | Not Available |
| VII | 13327191 | J-35616-3 (GY) | J-38125-560 | Not Available | Not Available | Not Available | Not Available |

### *X310 Driver Seat Cushion Harness to Body Harness*

| Pin | Size | Color | Circuit | Terminal Type ID | Option | Function | Pin | Size | Color | Circuit | Terminal Type ID | Option |
|---|---|---|---|---|---|---|---|---|---|---|---|---|
| 1 | - | - | - | - | - | Not Occupied | 1 | - | - | - | - | - |
| 2 | 2.5 | RD/YE | 5040 | III | - | Battery Positive Voltage | 2 | 2.5 | RD/YE | 5040 | IV | - |
| 3 | 1.5 | YE | 5129 | II | - | Adjustable Pedal Actuator Rearward Control | 3 | 1.5 | YE | 5129 | VII | - |
| 4 | 1.5 | L-GN/VT | 5130 | II | - | Adjustable Pedal Actuator Forward Control | 4 | 1.5 | L-GN/VT | 5130 | VII | - |
| 5 | 0.35 | OG/L-GN | 5055 | II | - | Driver Seat Position | 5 | 0.35 | OG/L-GN | 5055 | VI | - |

| | | | | | | | | | | | | |
|---|---|---|---|---|---|---|---|---|---|---|---|---|
| 5 | 0.35 | OG/L-GN | 5055 | II | - | Driver Seat Position Switch Signal | 5 | 0.35 | OG/L-GN | 5055 | VI | - |
| 6 | 0.35 | OG/BN | 238 | II | - | Driver Seat Belt Switch Signal | 6 | 0.35 | OG/BN | 238 | VI | - |
| 7 | 0.35 | BK/OG | 1363 | II | - | Driver Seat Belt Switch Low Reference | 7 | 0.35 | BK/OG | 1363 | VI | - |
| 8 | - | - | - | - | - | Not Occupied | 8 | - | - | - | - | - |
| 9 | 0.35 | L-GN/GY | 5286 | II | - | Adjustable Pedal Switch Forward Signal | 9 | 0.35 | L-GN/GY | 5286 | VI | - |
| 10 | 0.35 | WH/GY | 5285 | II | - | Adjustable Pedal Switch Rearward Signal | 10 | 0.35 | WH/GY | 5285 | VI | - |
| 11 | 4<br>2.5 | BK<br>BK | 1150<br>1150 | II | - | Ground<br>Ground | 11 | 4 | BK | 1150 | II | - |
| 12 | - | - | - | - | - | Not Occupied | 12 | - | - | - | - | - |
| 13 | 0.5 | WH/RD | 6207 | II | - | Memory Sensor High Reference | 13 | 0.35 | WH/RD | 6207 | VI | - |
| 14 | 0.35 | L-BU | 5952 | II | - | Adjustable Pedal Position Sensor Brake Signal | 14 | 0.35 | D-BU | 5952 | VI | - |
| 15 | 0.5 | BK/GY | 6206 | II | - | Memory Sensor Low Reference | 15 | 0.35 | BK/GY | 6206 | VI | - |
| 16 | - | - | - | - | - | Not Occupied | 16 | - | - | - | - | - |
| 17 | 0.5 | L-GN/WH | 7530 | II | - | Linear Interconnect Network Bus 8 | 17 | 0.5 | L-GN/WH | 7530 | V | - |
| 18 | - | - | - | - | - | Not Occupied | 18 | - | - | - | - | - |
| 19 | 0.35 | L-GN/VT | 5906 | II | - | Driver Seat Vent Motor Control (1) | 19 | 0.35 | L-GN/VT | 5906 | VI | - |
| 20-22 | - | - | - | - | - | Not Occupied | 20-22 | - | - | - | - | - |
| 23 | 0.75 | RD/BN | 1140 | II | - | Battery Positive Voltage | 23 | 0.5 | RD/BN | 1140 | V | - |
| 24 | 0.5 | L-GN/OG | 3069 | I | - | Driver Side Impact Module Low Control | 24 | 0.35 | L-GN/OG | 3069 | II | - |
| 25 | 0.5 | YE/OG | 3482 | I | - | Driver Seat Belt Anchor Pretensioner Low Control | 25 | 0.35 | YE/OG | 3482 | II | - |
| 26 | 0.5 | L-GN | 5060 | II | - | Low Speed GMLAN Serial Data | 26 | 0.5 | L-GN | 5060 | V | - |
| 27-32 | - | - | - | - | - | Not Occupied | 27-32 | - | - | - | - | - |
| 33 | 0.5 | OG/L-BU | 3068 | I | - | Driver Side Impact Module High Control | 33 | 0.35 | OG/D-BU | 3068 | II | - |
| 34 | 0.5 | OG/YE | 3481 | I | - | Driver Seat Belt Anchor Pretensioner High Control | 34 | 0.35 | OG/YE | 3481 | II | - |

| | | | | | | | | | | | | |
|---|---|---|---|---|---|---|---|---|---|---|---|---|
| 35 | 0.35 | L-GN/L-BU | 614 | II | - | Memory Seat Switch Set Signal | 35 | 0.35 | D-BU/L-GN | 614 | VI | - |
| 36 | 0.75 | BN | 2432 | II | - | Driver Heated Back Element Supply Voltage | 36 | 0.75 | BN | 2432 | V | - |
| 37 | 0.75 | BN/VT | 2077 | II | - | Driver Heated Seat Element Supply Voltage | 37 | 0.75 | BN/VT | 2077 | V | - |
| 38-39 | - | - | - | - | - | Not Occupied | 38-39 | - | - | - | - | - |
| 40 | 0.35 | BK/L-BU | 5978 | II | - | Memory Switch Low Reference | 40 | 0.35 | BK/D-BU | 5978 | VI | - |
| 41 | 0.35 | WH | 615 | II | - | Memory Seat Switch Signal (1) | 41 | 0.35 | WH | 615 | VI | - |
| 42 | - | - | - | - | - | Not Occupied | 42 | - | - | - | - | - |
| 43 | 0.5 | VT | 4106 | I | - | Center Side Impact Module Low Control | 43 | | | | | |
| 44 | 0.5 | BN/WH | 4107 | I | - | Center Side Impact Module High Control | 44 | | | | | |
| 45 | - | - | - | - | - | Not Occupied | 45 | - | - | - | - | - |
| 46 | 0.35 | GY | 157 | II | - | Interior Lamp Control | 46 | | | | | |
| 47 | 0.75 | RD/L-GN | 5140 | II | - | Battery Positive Voltage | 47 | 0.75 | RD/L-GN | 5140 | V | - |
| 48 | - | - | - | - | - | Not Occupied | 48 | - | - | - | - | - |

## X314 Center Seat Harness to Body Harness

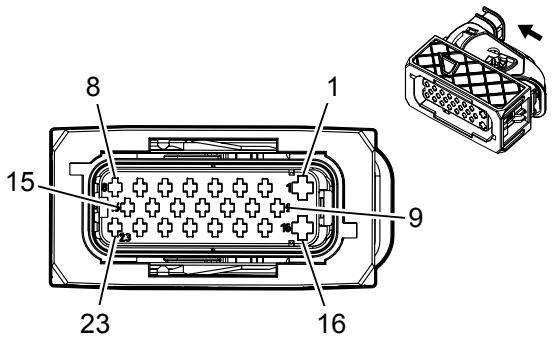


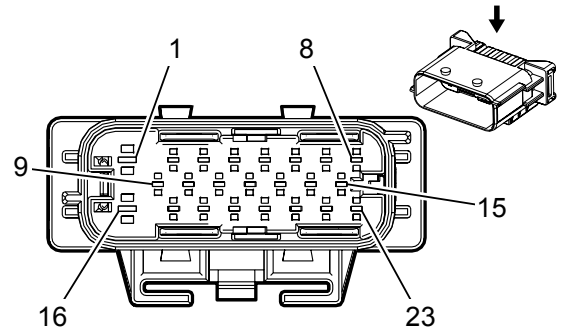


### Connector Part Information

Harness Type: Center Seat

OEM Connector: 13674800

Service Connector: Service by Harness - See Part Catalog

Description: 23-Way F 1.5 DSQ, 2.8 AST Series, Sealed (BK)

### Connector Part Information

Harness Type: Body

OEM Connector: 15504576

Service Connector: Not Available

Description: 23-Way M 1.5, 2.8 Series, Sealed (BK)

### *Terminal Part Information*

| Terminal Type ID | Terminated Lead | Diagnostic Test Probe | Terminal Removal Tool | Service Terminal | Tray | Core Crimp | Insulation Crimp |
|---|---|---|---|---|---|---|---|
| I | 13327155 | J-35616-35 (VT) | J-38125-36 | 4-964273-1 | 15 | E | 1 |
| II | Not Available | Not Available | Not Available | Not Available | Not Available | Not Available | Not Available |
| III | 13327181 | J-35616-14 (GN) | J-38125-560 | 964274-2 | 16 | E | 1 |
| IV | 13578881 | J-35616-5 (PU) | J-38125-36 | Not Available | Not Available | C | A |
| V | 13578882 | J-35616-3 (GY) | J-38125-560 | Not Available | Not Available | Not Available | Not Available |
| VI | 13575380 | J-35616-3 (GY) | J-38125-560 | Not Available | Not Available | E | 1 |

### *X314 Center Seat Harness to Body Harness*

| Pin | Size | Color | Circuit | Terminal Type ID | Option | Function | Pin | Size | Color | Circuit | Terminal Type ID | Option |
|---|---|---|---|---|---|---|---|---|---|---|---|---|
| 1 | 1.5 | RD/L-BU | 840 | I | - | Battery Positive Voltage | 1 | 1.5 | RD/D-BU | 840 | IV | - |
| 2 | - | - | - | - | - | Not Occupied | 2 | - | - | - | - | - |
| 3 | 0.35 | BK | 5842 | II | - | Auxiliary Audio Screen (2) | 3 | 0.5 | BK | 5842 | VI | - |
| 4 | 0.35 | GY | 5839 | II | - | Left Auxiliary Audio Signal (2) | 4 | 0.35 | GY | 5839 | V | - |
| 5-7 | - | - | - | - | - | Not Occupied | 5-7 | - | - | - | - | - |
| 8 | 0.35 | BK | 2 | II | - | Battery Positive Voltage | 8 | | | | | |
| 9 | 0.35 | BK | 2550 | II | - | Ground | 9 | 0.75 | BK | 2550 | VI | - |
| 10 | - | - | - | - | - | Not Occupied | 10 | - | - | - | - | - |
| 11 | 0.35 | L-GN | 5841 | II | - | Right Auxiliary Audio Signal (2) | 11 | 0.35 | L-GN | 5841 | V | - |

| | | | | | | | | | | | | |
|---|---|---|---|---|---|---|---|---|---|---|---|---|
| | | | | | | Signal (2) | | | | | | |
| 12 | 0.35 | L-BU | 2060 | II | - | Auxiliary Detection Signal | 12 | 0.35 | D-BU | 2060 | V | - |
| 13-15 | - | - | - | - | - | Not Occupied | 13-15 | - | - | - | - | - |
| 16 | 1.5 | BK | 1250 | I | - | Ground | 16 | 1.5 | BK | 1250 | IV | - |
| 17 | - | - | - | - | - | Not Occupied | 17 | - | - | - | - | - |
| 18 | 0.75 | RD/VT | 340 | III | - | Battery Positive Voltage | 18 | 0.75 | RD/VT | 340 | VI | - |
| 19 | 0.35 | VT | 5843 | II | - | Auxiliary Audio Common Signal | 19 | 0.35 | VT | 5843 | V | - |
| 20-23 | - | - | - | - | - | Not Occupied | 20-23 | - | - | - | - | - |

## X315 Headliner Harness to Body Harness

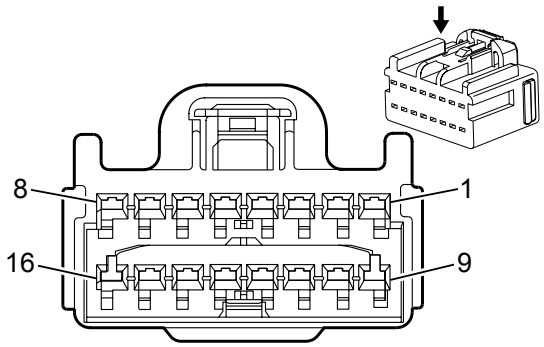


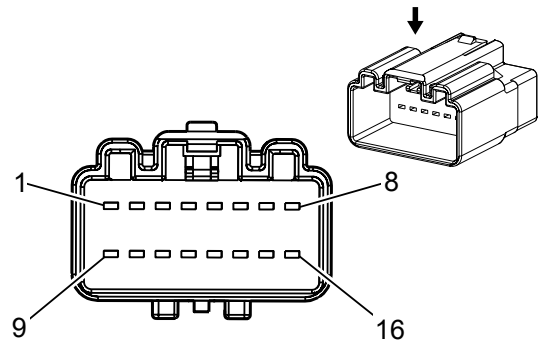


### Connector Part Information

Harness Type: Headliner

OEM Connector: 10847013

Service Connector: 89047090

Description: 16-Way F 1.5 Kaizen Series (GN)

### Connector Part Information

Harness Type: Body

OEM Connector: 13507433

Service Connector: Not Available

Description: 16-Way M 1.5 Kaizen Series (GN)

### *Terminal Part Information*

| Terminal Type ID | Terminated Lead | Diagnostic Test Probe | Terminal Removal Tool | Service Terminal | Tray | Core Crimp | Insulation Crimp |
|---|---|---|---|---|---|---|---|
| I | Not Available | J-35616-2A (GY) | J-38125-11A | 7116-4100-08 | 9 | E | C |
| II | Not Available | J-35616-3 (GY) | J-38125-553 | 7114-4100-08 | 9 | E | C |
| III | Not Available | J-35616-14 (GN) | J-38125-217 | Not Available | Not Available | Not Available | Not Available |

### *X315 Headliner Harness to Body Harness*

| Pin | Size | Color | Circuit | Terminal Type ID | Option | Function | Pin | Size | Color | Circuit | Terminal Type ID | Option |
|---|---|---|---|---|---|---|---|---|---|---|---|---|
| 1-2 | - | - | - | - | - | Not Occupied | 1-2 | - | - | - | - | - |
| 3 | 0.35<br>0.35 | L-GN<br>L-GN/RD | 2308<br>2308 | I | - | Passenger Air Bag Off Indicator Control<br>Passenger Air Bag Off Indicator Control | 3 | 0.35 | L-GN | 2308 | II | - |
| 4 | 0.35 | D-BU | 2307 | I | - | Passenger Air Bag On Indicator Control | 4 | 0.35 | D-BU | 2307 | II | - |
| 5 | 0.35 | VT/WH | 5234 | I | - | Passenger Seat Belt Indicator | 5 | 0.35 | VT/WH | 5234 | III | - |
| 6 | 0.5 | VT/GY | 1054 | I | - | Stop Lamp Supply Voltage | 6 | 0.5 | VT/GY | 1054 | II | - |
| 7-9 | - | - | - | - | - | Not Occupied | 7-9 | - | - | - | - | - |
| 10 | 0.35 | L-GN/BK | 3008 | I | - | Noise Reduction Microphone #1 Return | 10 | 0.35 | L-GN/BK | 3008 | II | - |
| 11 | 0.5<br>0.35<br>0.35 | GY<br>L-GN/BN<br>L-GN/WH | 157<br>3005<br>3005 | I | - | Interior Lamp Control<br>Noise Reduction Microphone #1 Signal<br>Noise Reduction | 11 | 0.5<br>0.35 | GY<br>L-GN/BN | 157<br>3005 | II | - |

| | | | | | | | | | | | | |
|---|---|---|---|---|---|---|---|---|---|---|---|---|
| | | | | | | Noise Reduction Microphone #1 Signal | | | | | | |
| 12 | 0.5<br>0.35 | WH/BN<br>D-BU/BK | 6815<br>3009 | I | - | Inadvertent Power Control<br>Noise Reduction Microphone #2 Return | 12 | 0.5<br>0.35 | WH/BN<br>D-BU/BK | 6815<br>3009 | II | - |
| 13 | 0.35 | D-BU/YE | 3006 | I | - | Noise Reduction Microphone #2 Signal | 13 | 0.35 | D-BU/YE | 3006 | II | - |
| 14 | 0.35<br>0.35<br>0.35 | GY/BN<br>GY<br>GY/D-BU | 3010<br>156<br>156 | I | - | Noise Reduction Microphone #3 Return<br>Courtesy Lamp Switch Signal<br>Courtesy Lamp Switch Signal | 14 | 0.35<br>0.35 | GY<br>GY/BN | 156<br>3010 | II | - |
| 15 | 0.35 | GY/D-BU | 3007 | I | - | Noise Reduction Microphone #3 Signal | 15 | 0.35 | GY/D-BU | 3007 | II | - |
| 16 | - | - | - | - | - | Not Occupied | 16 | - | - | - | - | - |

## X316 Headliner Harness to Overhead Console Harness

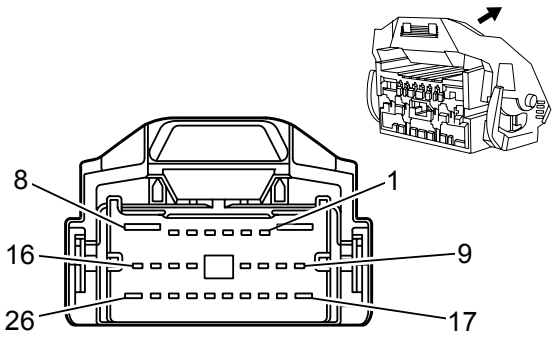


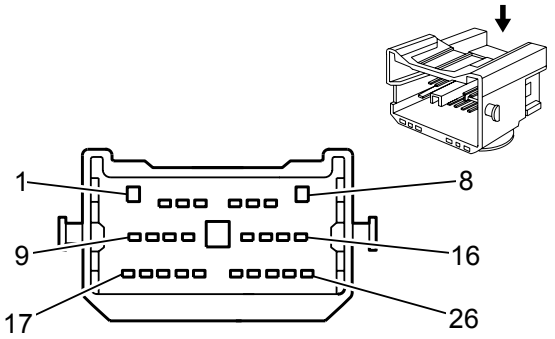


### Connector Part Information

Harness Type: Headliner

OEM Connector: 15518265

Service Connector: Not Available

Description: 26-Way F 1.5, 2.8, 6.3 Series (BK)

### Connector Part Information

Harness Type: Overhead Console

OEM Connector: 13536441

Service Connector: 88952802

Description: 26-Way M Hybrid Series (BK)

### *Terminal Part Information*

| Terminal Type ID | Terminated Lead | Diagnostic Test Probe | Terminal Removal Tool | Service Terminal | Tray | Core Crimp | Insulation Crimp |
|---|---|---|---|---|---|---|---|
| I | Not Available | J-35616-2A (GY) | J-38125-11A | 7116-4100-08 | 9 | E | C |
| II | Not Available | J-35616-4A (PU) | J-38125-11A | 7116-4110-02 | 9 | E | C |
| III | Not Available | J-35616-3 (GY) | J-38125-553 | 7114-4100-08 | 9 | E | C |
| IV | Not Available | Not Available | Not Available | Not Available | Not Available | Not Available | Not Available |
| V | Not Available | PENDING | Not Available | Not Available | Not Available | Not Available | Not Available |

### *X316 Headliner Harness to Overhead Console Harness*

| Pin | Size | Color | Circuit | Terminal Type ID | Option | Function | Pin | Size | Color | Circuit | Terminal Type ID | Option |
|---|---|---|---|---|---|---|---|---|---|---|---|---|
| 1-2 | - | - | - | - | - | Not Occupied | 1-2 | - | - | - | - | - |
| 3 | 0.35 | VT/YE | 43 | I | - | Accessory Voltage | 3 | 0.35 | VT/YE | 43 | III | - |
| 4 | 0.5 | BK | 1050 | I | - | Ground | 4 | 0.5 | BK | 1050 | III | - |
| 5 | 0.35 | GY/L-GN | 328 | I | - | Interior Lamp Defeat Switch Signal | 5 | 0.35 | GY/L-GN | 328 | III | - |
| 6 | 0.35<br>0.35 | GY<br>GY/D-BU | 156<br>156 | I | - | Courtesy Lamp Switch Signal<br>Courtesy Lamp Switch Signal | 6 | 0.35 | GY | 156 | III | - |
| 7 | 0.5 | WH/BN | 6815 | I | - | Inadvertent Power Control | 7 | 0.5 | WH/BN | 6815 | V | - |
| 8 | - | - | - | - | - | Not Occupied | 8 | - | - | - | - | - |
| 9 | 0.35 | VT/L-GN | 7558 | I | - | LED Ambient Lighting Control 2 | 9 | 0.35 | VT/L-GN | 7558 | III | - |

| | | | | | | | | | | | |
|---|---|---|---|---|---|---|---|---|---|---|---|
| 10 | 0.5 | YE | 6817 | I | - | LED Backlight Dimming Control | 10 | 0.5 | YE | 6817 | III | - |
| 11 | 0.35<br>0.35 | VT/WH<br>VT/BK | 1139<br>1139 | I | - | Run/Crank Ignition 1 Voltage<br>Run/Crank Ignition 1 Voltage | 11 | 0.35 | VT/WH | 1139 | III | - |
| 12 | 0.35 | VT/WH | 5234 | I | - | Passenger Seat Belt Indicator | 12 | 0.35 | VT/WH | 5234 | III | - |
| 13 | 0.35 | D-BU | 2307 | I | - | Passenger Air Bag On Indicator Control | 13 | 0.35 | D-BU | 2307 | III | - |
| 14 | 0.35<br>0.35 | L-GN<br>L-GN/RD | 2308<br>2308 | I | - | Passenger Air Bag Off Indicator Control<br>Passenger Air Bag Off Indicator Control | 14 | 0.35 | L-GN | 2308 | III | - |
| 15-16 | - | - | - | - | - | Not Occupied | 15-16 | - | - | - | - | - |
| 17 | 0.5 | RD/YE | 240 | II | - | Battery Positive Voltage | 17 | 0.5<br>0.35 | RD/YE<br>RD/YE | 240<br>240 | IV | - |
| 18 | - | - | - | - | - | Not Occupied | 18 | - | - | - | - | - |
| 19 | 0.35 | YE/VT | 6191 | I | - | Power Sliding Window Switch Open Signal | 19 | 0.35 | YE/VT | 6191 | III | - |
| 20 | 0.35 | WH | 6192 | I | - | Power Sliding Window Switch Close Signal | 20 | 0.35 | WH | 6192 | III | - |
| 21 | 0.5 | GY | 157 | I | - | Interior Lamp Control | 21 | 0.5 | GY | 157 | V | - |
| 22 | - | - | - | - | - | Not Occupied | 22 | - | - | - | - | - |
| 23 | 0.35 | VT/YE | 43 | I | - | Accessory Voltage | 23 | 0.35 | VT/YE | 43 | III | - |
| 24-26 | - | - | - | - | - | Not Occupied | 24-26 | - | - | - | - | - |

## X318 Overhead Console Harness to Headliner Harness

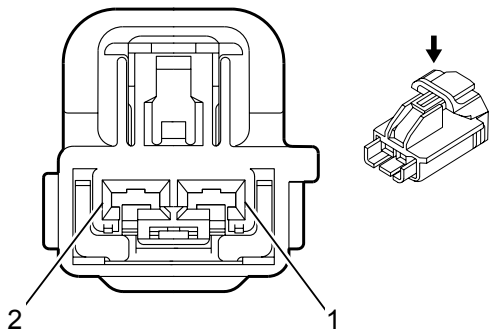


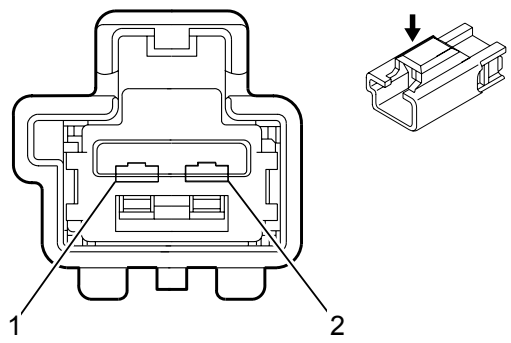


### Connector Part Information

Harness Type: Overhead Console

OEM Connector: 10846819

Service Connector: Service by Harness - See Part Catalog

Description: 2-Way F Kaizen YESC Series (L-GY)

### Connector Part Information

Harness Type: Headliner

OEM Connector: 10846812

Service Connector: 88988510

Description: 2-Way M Kaizen YESC Series (L-GY)

### *Terminal Part Information*

| Terminal Type ID | Terminated Lead | Diagnostic Test Probe | Terminal Removal Tool | Service Terminal | Tray | Core Crimp | Insulation Crimp |
|---|---|---|---|---|---|---|---|
| I | Pending | J-35616-35 (VT) | J-38125-11A | 7116-4112-02 | 9 | C | D |
| II | Pending | Pending | Pending | Not Available | Not Available | Not Available | Not Available |

### *X318 Overhead Console Harness to Headliner Harness*

| Pin | Size | Color | Circuit | Terminal Type ID | Option | Function | Pin | Size | Color | Circuit | Terminal Type ID | Option |
|---|---|---|---|---|---|---|---|---|---|---|---|---|
| 1 | 2.5 | RD/L-GN | 3140 | I | - | Battery Positive Voltage | 1 | 2.5 | RD/L-GN | 3140 | II | - |
| 2 | 2.5 | BK | 1050 | I | - | Ground | 2 | 2.5 | BK | 1050 | II | - |

## X319 Overhead Console Harness to Headliner Harness

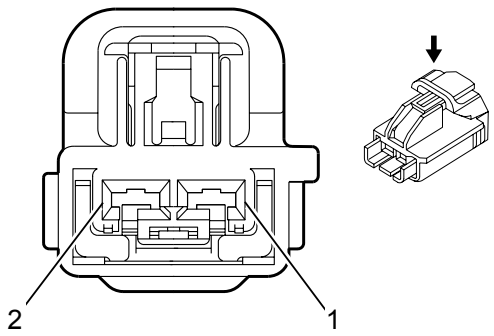


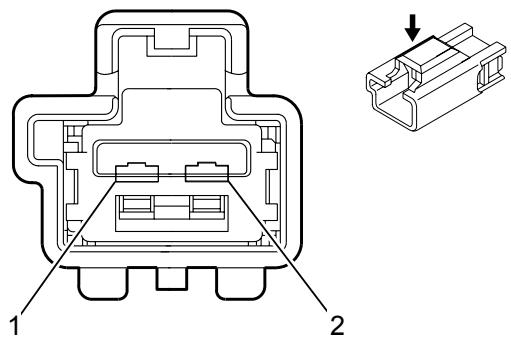


### Connector Part Information

Harness Type: Overhead Console

OEM Connector: 10846819

Service Connector: Service by Harness - See Part Catalog

Description: 2-Way F Kaizen YESC Series (L-GY)

### Connector Part Information

Harness Type: Headliner

OEM Connector: 10846812

Service Connector: 88988510

Description: 2-Way M Kaizen YESC Series (L-GY)

### *Terminal Part Information*

| Terminal Type ID | Terminated Lead | Diagnostic Test Probe | Terminal Removal Tool | Service Terminal | Tray | Core Crimp | Insulation Crimp |
|---|---|---|---|---|---|---|---|
| I | Not Available | J-35616-35 (VT) | J-38125-11A | 7116-4112-02 | 9 | C | D |
| II | Not Available | Not Available | Not Available | Not Available | Not Available | Not Available | Not Available |

### *X319 Overhead Console Harness to Headliner Harness*

| Pin | Size | Color | Circuit | Terminal Type ID | Option | Function | Pin | Size | Color | Circuit | Terminal Type ID | Option |
|---|---|---|---|---|---|---|---|---|---|---|---|---|
| 1 | 2.5 | RD/L-GN | 3140 | I | - | Battery Positive Voltage | 1 | 2.5 | RD/L-GN | 3140 | II | - |
| 2 | 2.5 | BK | 1050 | I | - | Ground | 2 | 2.5 | BK | 1050 | II | - |

## X320 Passenger Seat Cushion Harness to Body Harness

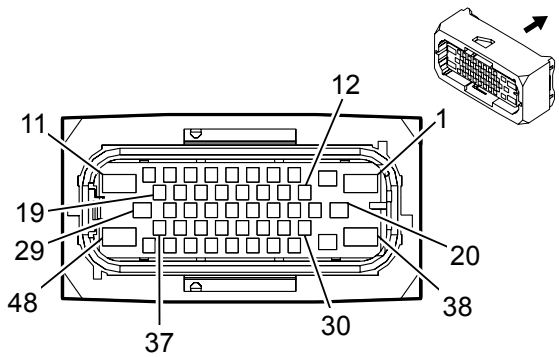


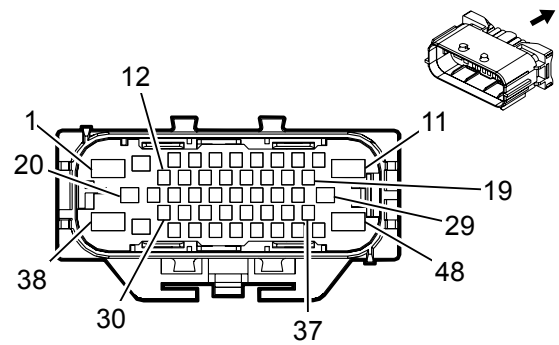


### Connector Part Information

Harness Type: Passenger Seat Cushion

OEM Connector: 15509590

Service Connector: Service by Harness - See Part Catalog

Description: 48-Way F 1.5 MCP, 2.8 JPT, 6.3 MCP Series, Sealed (YE)

Harness Type: Passenger Seat Cushion

OEM Connector: 15509598

Service Connector: Service by Harness - See Part Catalog

Description: 48-Way F 1.5 MCP, 2.8 JPT, 6.3 MCP Series, Sealed (YE)

### Connector Part Information

Harness Type: Body

OEM Connector: 15507907

Service Connector: Not Available

Description: 48-Way M 1.5 MCP, 2.8 JPT, 6.3 MCP Series, Sealed (YE)

### *Terminal Part Information*

| Terminal Type ID | Terminated Lead | Diagnostic Test Probe | Terminal Removal Tool | Service Terminal | Tray | Core Crimp | Insulation Crimp |
|---|---|---|---|---|---|---|---|
| I | Not Available | Not Available | Not Available | Not Available | Not Available | Not Available | Not Available |
| II | 13327155 | J-35616-35 (VT) | J-38125-36 | 4-964273-1 | 15 | C | 5 |
| III | Not Available | J-35616-64B (L-BU) | J-38125-215A | Not Available | Not Available | Not Available | Not Available |
| IV | 13578882 | J-35616-3 (GY) | J-38125-560 | Not Available | Not Available | Not Available | Not Available |
| V | 13575380 | J-35616-3 (GY) | J-38125-560 | Not Available | Not Available | E | 1 |
| VI | 13578881 | J-35616-5 (PU) | J-38125-36 | Not Available | Not Available | C | 4 |

### *X320 Passenger Seat Cushion Harness to Body Harness*

| Pin | Size | Color | Circuit | Terminal Type ID | Option | Function | Pin | Size | Color | Circuit | Terminal Type ID | Option |
|---|---|---|---|---|---|---|---|---|---|---|---|---|
| 1 | - | - | - | - | - | Not Occupied | 1 | - | - | - | - | - |
| 2 | 2.5 | RD/BN | 1440 | II | - | Battery Positive Voltage | 2 | 2.5 | RD/BN | 1440 | VI | - |
| 3-4 | - | - | - | - | - | Not Occupied | 3-4 | - | - | - | - | - |
| 5 | 0.35 | OG/L-BU | 5056 | I | - | Passenger Seat Position Switch Signal | 5 | 0.35 | OG/D-BU | 5056 | IV | - |
| 6 | 0.35 | OG/VT | 1362 | I | - | Passenger Seat Belt Switch Signal | 6 | 0.35 | OG/VT | 1362 | IV | - |
| 7 | 0.35 | BK/OG | 1361 | I | - | Passenger Seat Belt Switch Low Reference | 7 | 0.35 | BK/OG | 1361 | IV | - |

| | | | | | | | | | | | | |
|---|---|---|---|---|---|---|---|---|---|---|---|---|
| 8 | 0.75 | BN/VT | 2077 | I | - | Driver Heated Seat Element Supply Voltage | 8 | 0.75 | BN/VT | 2077 | V | - |
| 9 | 0.75 | BN | 2432 | I | - | Driver Heated Back Element Supply Voltage | 9 | 0.75 | BN | 2432 | V | - |
| 10 | - | - | - | - | - | Not Occupied | 10 | - | - | - | - | - |
| 11 | 4<br>2.5 | BK<br>BK | 1250<br>1250 | I | - | Ground<br>Ground | 11 | 4 | BK | 1250 | I | - |
| 12-13 | - | - | - | - | - | Not Occupied | 12-13 | - | - | - | - | - |
| 14 | 0.35 | L-BU/RD | 5612 | I | - | Passenger Seat Belt Tension Sensor Voltage Reference | 14 | 0.35 | D-BU/RD | 5612 | IV | - |
| 15 | 0.35 | VT/OG | 5611 | I | - | Passenger Seat Belt Tension Sensor Signal | 15 | 0.35 | VT/OG | 5611 | IV | - |
| 16 | - | - | - | - | - | Not Occupied | 16 | - | - | - | - | - |
| 17 | 0.75 | RD/L-GN | 6140 | I | - | Battery Positive Voltage | 17 | 0.75 | RD/L-GN | 6140 | V | - |
| 18 | - | - | - | - | - | Not Occupied | 18 | - | - | - | - | - |
| 19 | 0.35 | VT/WH | 5908 | I | - | Passenger Seat Vent Motor Control (1) | 19 | 0.35 | VT/WH | 5908 | IV | - |
| 20-23 | - | - | - | - | - | Not Occupied | 20-23 | - | - | - | - | - |
| 24 | 0.5 | BN/OG | 3067 | III | - | Passenger Side Impact Module Low Control | 24 | 0.35 | BN/OG | 3067 | I | - |
| 25 | 0.5 | GY/OG | 3480 | III | - | Passenger Seat Belt Anchor Pretensioner Low Control | 25 | 0.35 | GY/OG | 3480 | I | - |
| 26 | 0.35<br>0.5 | L-GN<br>L-GN | 5060<br>5060 | I | - | Low Speed GMLAN Serial Data<br>Low Speed GMLAN Serial Data | 26 | 0.35 | L-GN | 5060 | IV | - |
| 27 | 0.35 | L-GN/L-BU | 6133 | I | - | Linear Interconnect Network Bus 2 | 27 | 0.5 | L-GN/D-BU | 6133 | V | - |
| 28-32 | - | - | - | - | - | Not Occupied | 28-32 | - | - | - | - | - |
| 33 | 0.5 | OG/GY | 3066 | III | - | Passenger Side Impact Module High Control | 33 | 0.35 | OG/GY | 3066 | I | - |
| 34 | 0.5 | OG/BN | 3479 | III | - | Passenger Seat Belt Anchor Pretensioner High Control | 34 | 0.35 | OG/BN | 3479 | I | - |
| 35 | 0.35 | RD/L-GN | 4440 | I | - | Battery Positive Voltage | 35 | 0.35 | RD/L-GN | 4440 | IV | - |
| 36 | 0.35 | BK/WH | 2751 | I | - | Signal Ground | 36 | 0.5 | BK/WH | 2751 | V | - |
| 37-45 | - | - | - | - | - | Not Occupied | 37-45 | - | - | - | - | - |
| 46 | 0.35 | GY | 157 | I | - | Interior Lamp Control | 46 | | | | | |

| | | | | | | | | | | | | |
|---|---|---|---|---|---|---|---|---|---|---|---|---|
| 46 | 0.35 | GY | 157 | I | - | Interior Lamp Control | 46 | | | | | |
| 47 | 0.75 | RD/L-GN | 5140 | I | - | Battery Positive Voltage | 47 | 0.75 | RD/L-GN | 5140 | V | - |
| 48 | - | - | - | - | - | Not Occupied | 48 | - | - | - | - | - |

## X399 Instrument Panel Harness to Instrument Panel Harness

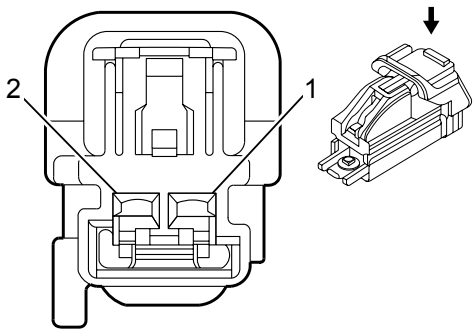


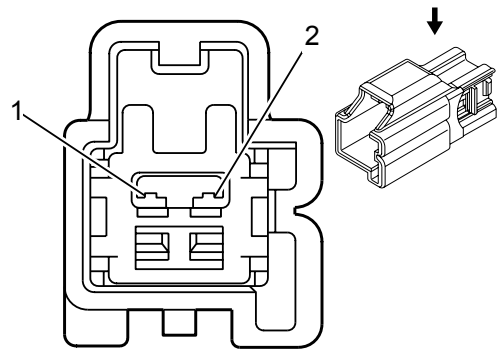


### Connector Part Information

Harness Type: Instrument Panel

OEM Connector: 10846794

Service Connector: 88988504

Description: 2-Way F 1.5 YESC Series (L-GY)

### Connector Part Information

Harness Type: Instrument Panel

OEM Connector: 10846798

Service Connector: 88988503

Description: 2-Way M 1.5 Series (L-GY)

### *Terminal Part Information*

| Terminal Type ID | Terminated Lead | Diagnostic Test Probe | Terminal Removal Tool | Service Terminal | Tray | Core Crimp | Insulation Crimp |
|---|---|---|---|---|---|---|---|
| I | Not Available | J-35616-14 (GN) | J-38125-217 | Not Available | Not Available | E | 2 |
| II | Not Available | J-35616-3 (GY) | J-38125-553 | 7114-4100-08 | 9 | E | C |

### *X399 Instrument Panel Harness to Instrument Panel Harness*

| Pin | Size | Color | Circuit | Terminal Type ID | Option | Function | Pin | Size | Color | Circuit | Terminal Type ID | Option |
|---|---|---|---|---|---|---|---|---|---|---|---|---|
| 1 | 0.5 | GY/VT | 3998 | I | - | MOST Serial Data (+) | 1 | 0.5 | GY/VT | 3998 | I | - |
| 2 | 0.5 | WH/L-GN | 3997 | I | - | MOST Serial Data (-) | 2 | 0.5 | WH/L-GN | 3997 | I | - |

## X416 License Lamp Jumper Harness to Rear Clearance Lamps (Left) Jumper Harness (ZW9)

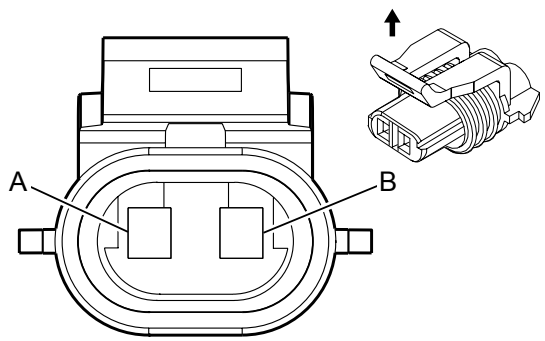


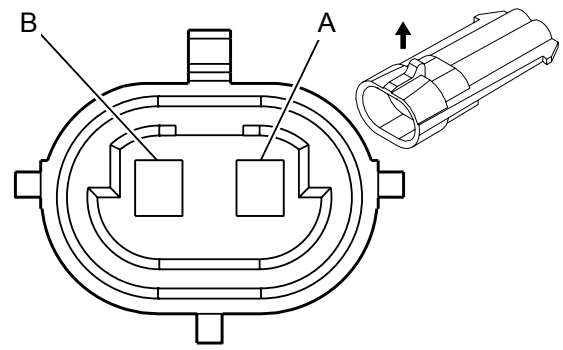


### Connector Part Information

Harness Type: License Lamp Jumper

OEM Connector: 12052644

Service Connector: SEE NOTE

Description: 2-Way F 150 Metri Pack Series, Sealed (GY)

### Connector Part Information

Harness Type: Rear Clearance Lamps (Left) Jumper

OEM Connector: 12162343

Service Connector: 12162343

Description: 2-Way M 150 Metri Pack Series (GY)

### *Terminal Part Information*

| Terminal Type ID | Terminated Lead | Diagnostic Test Probe | Terminal Removal Tool | Service Terminal | Tray | Core Crimp | Insulation Crimp |
|---|---|---|---|---|---|---|---|
| I | 13575427 | J-35616-14 (GN) | J-38125-12A | 12048074 | 2 | E | 1 |
| II | 13575420 | J-35616-3 (GY) | J-38125-12A | 12045773 | 2 | E | 1 |

### *X416 License Lamp Jumper Harness to Rear Clearance Lamps (Left) Jumper Harness (ZW9)*

| Pin | Size | Color | Circuit | Terminal Type ID | Option | Function | Pin | Size | Color | Circuit | Terminal Type ID | Option |
|---|---|---|---|---|---|---|---|---|---|---|---|---|
| A | 0.5 | VT/GY | 709 | I | - | Left Park Lamp Supply Voltage | A | 0.5 | VT/GY | 709 | II | - |
| B | 0.5 | BK | 1750 | I | - | Ground | B | 0.5 | BK | 1750 | II | - |

## X416 Rear Bumper Harness to Rear Clearance Lamps (Left) Jumper Harness (except ZW9)

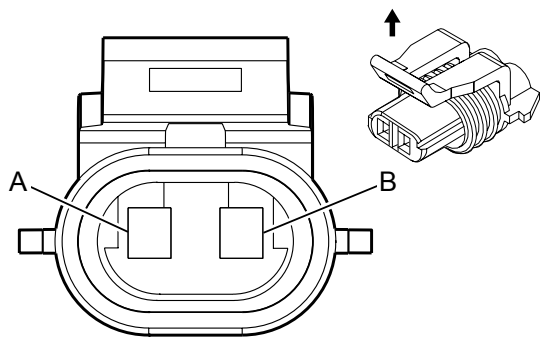


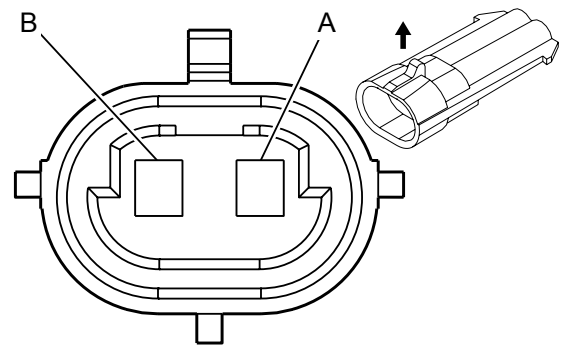


### Connector Part Information

Harness Type: Rear Bumper

OEM Connector: 12052644

Service Connector: SEE NOTE

Description: 2-Way F 150 Metri Pack Series, Sealed (GY)

### Connector Part Information

Harness Type: Rear Clearance Lamps (Left) Jumper

OEM Connector: 12162343

Service Connector: 12162343

Description: 2-Way M 150 Metri Pack Series (GY)

### *Terminal Part Information*

| Terminal Type ID | Terminated Lead | Diagnostic Test Probe | Terminal Removal Tool | Service Terminal | Tray | Core Crimp | Insulation Crimp |
|---|---|---|---|---|---|---|---|
| I | 13575427 | J-35616-14 (GN) | J-38125-12A | 12048074 | 2 | E | 1 |
| II | 13575420 | J-35616-3 (GY) | J-38125-12A | 12045773 | 2 | E | 1 |

### *X416 Rear Bumper Harness to Rear Clearance Lamps (Left) Jumper Harness (except ZW9)*

| Pin | Size | Color | Circuit | Terminal Type ID | Option | Function | Pin | Size | Color | Circuit | Terminal Type ID | Option |
|---|---|---|---|---|---|---|---|---|---|---|---|---|
| A | 0.5 | VT/GY | 709 | I | - | Left Park Lamp Supply Voltage | A | 0.5 | VT/GY | 709 | II | - |
| B | 0.5 | BK | 1750 | I | - | Ground | B | 0.5 | BK | 1750 | II | - |

## X416 Rear Bumper Harness to Rear Clearance Lamps (Left) Jumper Harness (ZW9)

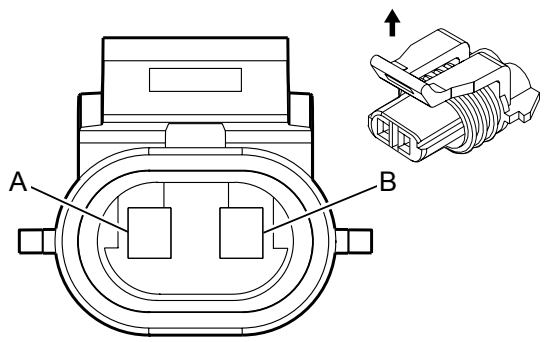


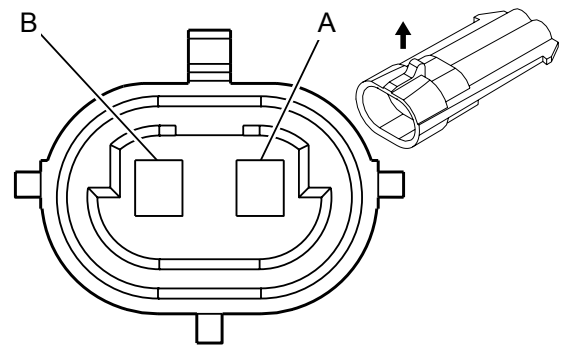


### Connector Part Information

Harness Type: Rear Bumper

OEM Connector: 12052644

Service Connector: SEE NOTE

Description: 2-Way F 150 Metri Pack Series, Sealed (GY)

### Connector Part Information

Harness Type: Rear Clearance Lamps (Left) Jumper

OEM Connector: 12162343

Service Connector: 12162343

Description: 2-Way M 150 Metri Pack Series (GY)

### *Terminal Part Information*

| Terminal Type ID | Terminated Lead | Diagnostic Test Probe | Terminal Removal Tool | Service Terminal | Tray | Core Crimp | Insulation Crimp |
|---|---|---|---|---|---|---|---|
| I | 13575427 | J-35616-14 (GN) | J-38125-12A | 12048074 | 2 | E | 1 |
| II | 13575420 | J-35616-3 (GY) | J-38125-12A | 12045773 | 2 | E | 1 |

### *X416 Rear Bumper Harness to Rear Clearance Lamps (Left) Jumper Harness (ZW9)*

| Pin | Size | Color | Circuit | Terminal Type ID | Option | Function | Pin | Size | Color | Circuit | Terminal Type ID | Option |
|---|---|---|---|---|---|---|---|---|---|---|---|---|
| A | 0.5 | VT/GY | 709 | I | - | Left Park Lamp Supply Voltage | A | 0.5 | VT/GY | 709 | II | - |
| B | 0.5 | BK | 1750 | I | - | Ground | B | 0.5 | BK | 1750 | II | - |

## X417 License Lamp Jumper Harness to Rear Clearance Lamps (Right) Jumper Harness

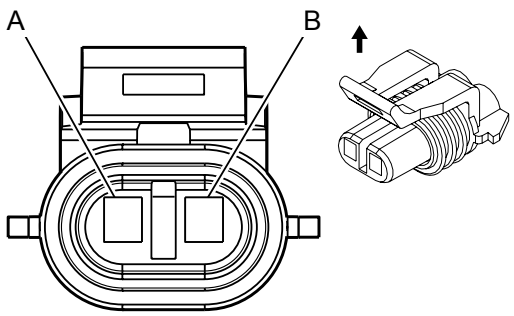


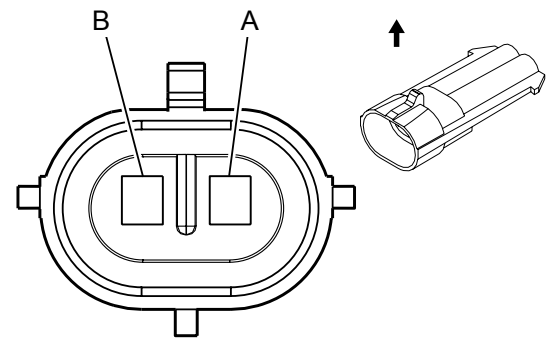


### Connector Part Information

Harness Type: License Lamp Jumper

OEM Connector: 12052641

Service Connector: 13586114

Description: 2-Way F 150 Metri Pack Series (BK)

Harness Type: Rear Bumper

OEM Connector: 12052641

Service Connector: 13586114

Description: 2-Way F 150 Metri Pack Series (BK)

### Connector Part Information

Harness Type: Rear Clearance Lamps (Right) Jumper

OEM Connector: 12162000

Service Connector: 12167120

Description: 2-Way M 150 Metri Pack Series (BK)

### *Terminal Part Information*

| Terminal Type ID | Terminated Lead | Diagnostic Test Probe | Terminal Removal Tool | Service Terminal | Tray | Core Crimp | Insulation Crimp |
|---|---|---|---|---|---|---|---|
| I | 13575427 | J-35616-14 (GN) | J-38125-12A | 12048074 | 2 | E | 1 |
| II | 13575420 | J-35616-3 (GY) | J-38125-12A | 12045773 | 2 | E | 1 |

### *X417 License Lamp Jumper Harness to Rear Clearance Lamps (Right) Jumper Harness*

| Pin | Size | Color | Circuit | Terminal Type ID | Option | Function | Pin | Size | Color | Circuit | Terminal Type ID | Option |
|---|---|---|---|---|---|---|---|---|---|---|---|---|
| A | 0.5 | GY/BN | 309 | I | - | Right Park Lamp Supply Voltage | A | 0.5 | GY/BN | 309 | II | - |
| B | 0.5 | BK | 1750 | I | - | Ground | B | 0.5 | BK | 1750 | II | - |

## X417 Rear Bumper Harness to Rear Clearance Lamps (Right) Jumper Harness (ZW9)

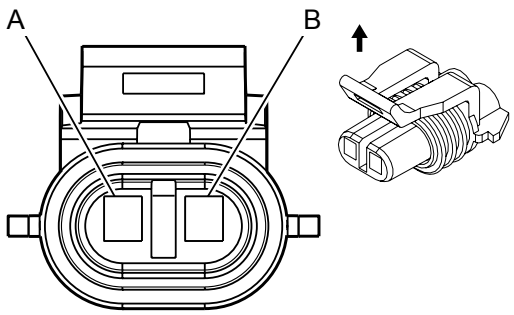


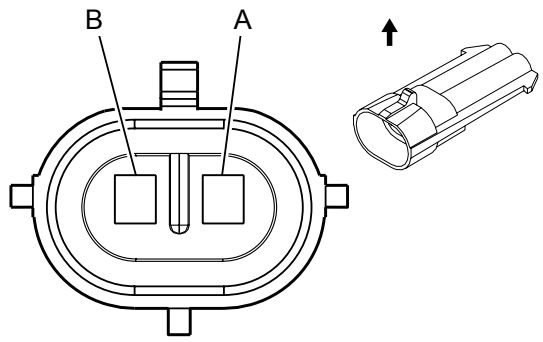


### Connector Part Information

Harness Type: Rear Bumper

OEM Connector: 12052641

Service Connector: 13586114

Description: 2-Way F 150 Metri Pack Series (BK)

### Connector Part Information

Harness Type: Rear Clearance Lamps (Right) Jumper

OEM Connector: 12162000

Service Connector: 12167120

Description: 2-Way M 150 Metri Pack Series (BK)

### *Terminal Part Information*

| Terminal Type ID | Terminated Lead | Diagnostic Test Probe | Terminal Removal Tool | Service Terminal | Tray | Core Crimp | Insulation Crimp |
|---|---|---|---|---|---|---|---|
| I | 13575427 | J-35616-14 (GN) | J-38125-12A | 12048074 | 2 | E | 1 |
| II | 13575420 | J-35616-3 (GY) | J-38125-12A | 12045773 | 2 | E | 1 |

### *X417 Rear Bumper Harness to Rear Clearance Lamps (Right) Jumper Harness (ZW9)*

| Pin | Size | Color | Circuit | Terminal Type ID | Option | Function | Pin | Size | Color | Circuit | Terminal Type ID | Option |
|---|---|---|---|---|---|---|---|---|---|---|---|---|
| A | 0.5 | GY/BN | 309 | I | - | Right Park Lamp Supply Voltage | A | 0.5 | GY/BN | 309 | II | - |
| B | 0.5 | BK | 1750 | I | - | Ground | B | 0.5 | BK | 1750 | II | - |

## X500 Driver Door Harness to Body Harness

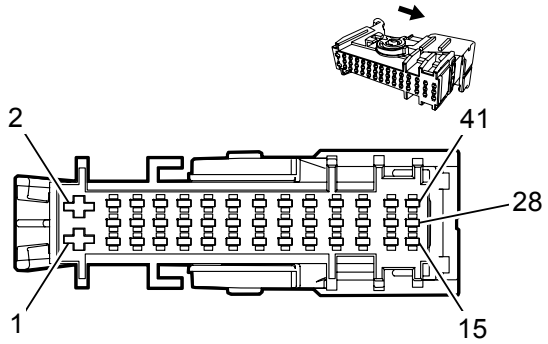


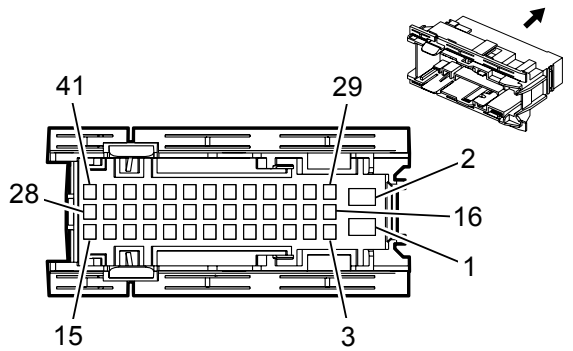


### Connector Part Information

Harness Type: Driver Door

OEM Connector: 13600509

Service Connector: Service by Harness - See Part Catalog

Description: 41-Way F 4.8 TIMER/DSQ 1.5 Series

### Connector Part Information

Harness Type: Body

OEM Connector: 13946876

Service Connector: 13587760

Description: 41-Way M 1.5, 2.8 Series (GY)

### *Terminal Part Information*

| Terminal Type ID | Terminated Lead | Diagnostic Test Probe | Terminal Removal Tool | Service Terminal | Tray | Core Crimp | Insulation Crimp |
|---|---|---|---|---|---|---|---|
| I | Pending | J-35616-42 (RD) | J-38125-36 | 927837-1 | 25 | A | D |
| II | Pending | J-35616-14 (GN) | J-38125-560 | 962943-5 | 16 | E | A |
| III | Pending | J-35616-14 (GN) | J-38125-560 | 962943-5 | 16 | Not Available | Not Available |
| IV | Pending | J-35616-42 (RD) | J-38125-36 | 964328-1 | 25 | 4 | B |
| V | Pending | J-35616-14 (GN) | J-38125-560 | 964265-2 | 28 | C | A |
| VI | Pending | J-35616-14 (GN) | J-38125-560 | 964265-2 | 28 | E | C |
| VII | Pending | J-35616-14 (GN) | J-38125-560 | 964265-2 | 28 | E | 2 |
| VIII | Pending | J-35616-42 (RD) | J-38125-36 | Not Available | Not Available | Not Available | Not Available |

### *X500 Driver Door Harness to Body Harness*

| Pin | Size | Color | Circuit | Terminal Type ID | Option | Function | Pin | Size | Color | Circuit | Terminal Type ID | Option |
|---|---|---|---|---|---|---|---|---|---|---|---|---|
| 1 | 2.5 | RD/D-BU | 1842 | I | - | Battery Positive Voltage | 1 | 2.5 | RD/D-BU | 1842 | III | - |
| 2 | 3 | BK | 1150 | IV | - | Ground | 2 | 4 | BK | 1150 | VIII | - |
| 3 | 0.5 | GY/WH | 5996 | II | - | Driver Outside Rear View Mirror Puddle Lamp Supply Voltage | 3 | 0.5 | GY/L-GN | 5996 | VII | - |
| 4 | 0.35 | WH | 3398 | III | - | Co-Driver Mirror Motor Common Control | 4 | 0.35 | WH | 3398 | VII | - |
| 5 | 0.35 | YE/BK | 1690 | III | - | Automatic Day/Night Mirror Signal | 5 | 0.35 | YE/WH | 1690 | VII | - |
| 6 | 0.35 | BK/YE | 1691 | III | - | Automatic Day/Night Mirror Low Reference | 6 | 0.35 | BK/YE | 1691 | VII | - |

| | | | | | | | | | | | | |
|---|---|---|---|---|---|---|---|---|---|---|---|---|
| | | | | | | Mirror Low Reference | | | | | | |
| 7 | 0.5<br>0.35 | WH/L-GN<br>D-BU/L-GN | 3412<br>614 | II | - | Driver Mirror Motor Fold In Control<br>Memory Seat Switch Set Signal | 7 | 0.5<br>0.35 | WH/L-GN<br>D-BU/L-GN | 3412<br>614 | VII | - |
| 8 | 0.5<br>0.35 | GY/WH<br>WH | 3411<br>615 | II | - | Driver Mirror Motor Fold Out Control<br>Memory Seat Switch Signal (1) | 8 | 0.5<br>0.35 | GY/WH<br>WH | 3411<br>615 | VII | - |
| 9 | - | - | - | - | - | Not Occupied | 9 | - | - | - | - | - |
| 10 | 1 | D-BU | 201 | II | - | Left Front Speaker (+) (1) | 10 | 1<br>0.75 | D-BU<br>D-BU | 201<br>201 | V | - |
| 11 | - | - | - | - | - | Not Occupied | 11 | - | - | - | - | - |
| 12 | - | - | - | - | - | | 12 | - | - | - | - | - |
| 13 | 0.35 | WH/VT | 3270 | III | - | Driver Door Lock Motor Status | 13 | 0.35 | WH/VT | 3270 | VII | - |
| 14 | 0.5 | OG/L-GN | 2132 | II | - | Left Front Side Impact Sensing Module Signal | 14 | 0.35 | OG/L-GN | 2132 | VII | - |
| 15 | 0.5 | BK/OG | 6628 | II | - | Left Front Side Impact Sensing Module Low Reference | 15 | 0.35 | BK/OG | 6628 | VII | - |
| 16 | 0.35 | WH | 6816 | III | - | Indicator Dimming Control | 16 | 0.5 | WH | 6816 | VII | - |
| 17 | 0.35 | BN/WH | 781 | III | - | Driver Door Lock Switch Unlock Signal | 17 | 0.35 | BN/WH | 781 | VII | - |
| 18 | 0.35 | BN/YE | 780 | III | - | Driver Door Lock Switch Lock Signal | 18 | 0.35 | BN/YE | 780 | VII | - |
| 19 | 0.75 | BN/BK | 294 | II | - | Door Lock Actuator Unlock Control | 19 | 0.75 | BN/YE | 294 | VI | - |
| 20 | 0.75 | GY | 5911 | II | - | Door Lock Actuator Lock Control 2 | 20 | 0.75 | GY | 5911 | VI | - |
| 21 | 0.35 | BK/D-BU | 5978 | III | - | Memory Switch Low Reference | 21 | 0.35 | BK/D-BU | 5978 | VII | - |
| 22 | - | - | - | - | - | Not Occupied | 22 | - | - | - | - | - |
| 23 | 1 | BN/D-BU | 118 | II | - | Left Front Speaker Signal (-) (1) | 23 | 0.75<br>1 | BN/D-BU<br>BN/D-BU | 118<br>118 | VI | - |
| 24-25 | - | - | - | - | - | Not Occupied | 24-25 | - | - | - | - | - |
| 26 | 0.35 | D-BU/VT | 1124 | III | - | Door Lock Key Switch Unlock Signal | 26 | 0.35 | D-BU/VT | 1124 | VII | - |
| 27-28 | - | - | - | - | - | Not Occupied | 27-28 | - | - | - | - | - |
| 29 | 0.35 | YE | 6817 | III | - | LED Backlight Dimming Control | 29 | 0.35 | YE | 6817 | VII | - |

| | | | | | | | | | | | | |
|---|---|---|---|---|---|---|---|---|---|---|---|---|
| | | | | | | Control | | | | | | |
| 30 | 0.35 | WH/YE | 7557 | III | - | LED Ambient Lighting Control 1 | 30 | 0.35 | WH/YE | 7557 | VII | - |
| 31 | 0.5 | BN/OG | 2267 | II | - | Mirror Heating Element Supply Voltage | 31 | 0.5 | BN/YE | 2267 | VII | - |
| 32 | 0.35 | GY | 5697 | III | - | Child Lockout Indicator | 32 | 0.35 | GY | 5697 | VII | - |
| 33 | 0.5 | L-GN/YE | 6134 | II | - | Linear Interconnect Network Bus 3 | 33 | 0.5 | L-GN/YE | 6134 | VII | - |
| 34 | 0.5 | L-GN/WH | 7530 | II | - | Linear Interconnect Network Bus 8 | 34 | 0.5 | L-GN/WH | 7530 | VII | - |
| 35 | 0.35 | BN/RD | 3265 | III | - | Child Security Lock Switch Signal | 35 | 0.35 | YE/BN | 3265 | VII | - |
| 36 | 0.35 | L-GN/BK | 3396 | III | - | Co-Driver Mirror Motor Right (+) Left (-) Control | 36 | 0.35 | L-GN/BK | 3396 | VII | - |
| 37 | - | - | - | - | - | Not Occupied | 37 | - | - | - | - | - |
| 38 | 0.35 | YE/VT | 3397 | III | - | Co-Driver Mirror Motor Up (+) Down (-) Control | 38 | 0.35 | YE/VT | 3397 | VII | - |
| 39 | - | - | - | - | - | Not Occupied | 39 | - | - | - | - | - |
| 40 | 0.35 | RD/VT | 1940 | III | - | Battery Positive Voltage | 40 | 0.5 | RD/VT | 1940 | VII | - |
| 41 | 0.5 | D-BU/WH | 1314 | II | - | Left Front Turn Signal Lamp Supply Voltage | 41 | 0.75 | D-BU/WH | 1314 | VI | - |

## X505 Driver Door Harness to Driver Door Trim Harness

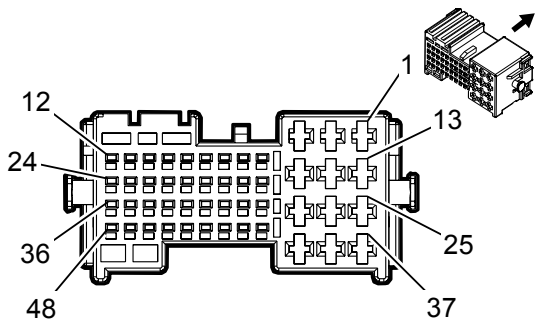


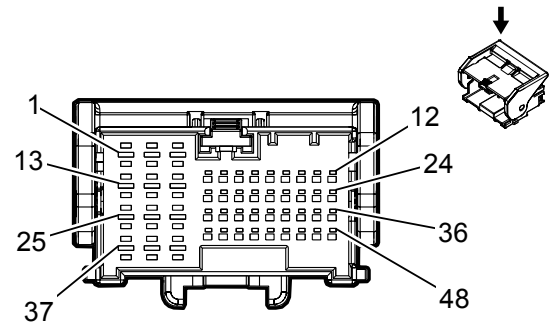


### Connector Part Information

Harness Type: Driver Door

OEM Connector: 13889713

Service Connector: Service by Harness - See Part Catalog

Description: 48-Way F 1.2 MCON, 2.8 MCP Series

### Connector Part Information

Harness Type: Driver Door Trim

OEM Connector: 13889712

Service Connector: Service by Harness - See Part Catalog

Description: 48-Way M 1.2 MCON, 2.8 MCP Series

Harness Type: Driver Door Trim

OEM Connector: 15512031

Service Connector: Service by Harness - See Part Catalog

Description: 48-Way M 1.2 MCON, 2.8 MCP Series (BK)

### *Terminal Part Information*

| Terminal Type ID | Terminated Lead | Diagnostic Test Probe | Terminal Removal Tool | Service Terminal | Tray | Core Crimp | Insulation Crimp |
|---|---|---|---|---|---|---|---|
| I | Pending | Pending | Pending | Not Available | Not Available | Not Available | Not Available |
| II | 13575435 | J-35616-35 (VT) | J-38125-557 | 1-968857-3 | 7 | Not Available | Not Available |
| III | Pending | J-35616-5 (PU) | J-38125-36 | Not Available | Not Available | Not Available | Not Available |

### *X505 Driver Door Harness to Driver Door Trim Harness*

| Pin | Size | Color | Circuit | Terminal Type ID | Option | Function | Pin | Size | Color | Circuit | Terminal Type ID | Option |
|---|---|---|---|---|---|---|---|---|---|---|---|---|
| 1 | 0.35 | YE | 6817 | I | - | LED Backlight Dimming Control | 1 | 0.35 | YE | 6817 | III | - |
| 2 | 0.35 | WH/YE | 7557 | I | - | LED Ambient Lighting Control 1 | 2 | 0.35 | WH/YE | 7557 | III | - |
| 3 | 0.35 | WH | 6816 | I | - | Indicator Dimming Control | 3 | 0.35 | WH | 6816 | III | - |
| 4 | - | - | - | - | - | Not Occupied | 4 | - | - | - | - | - |
| 5 | 0.35 | BN/BK | 3389 | I | - | Driver Mirror Motor Right (+) Left (-) Control | 5 | 0.75 | BN/BK | 3389 | I | - |
| 6 | 0.35 | VT/D-BU | 3390 | I | - | Driver Mirror Motor Up (+) Down (-) Control | 6 | 0.75 | VT/D-BU | 3390 | I | - |
| 7 | 0.35 | YE/BN | 3391 | I | - | Driver Mirror Motor Common Control | 7 | 0.75 | YE/BN | 3391 | I | - |
| 8 | 0.5 | GY/WH | 3411 | I | - | Driver Mirror Motor Fold | 8 | 0.75 | GY/WH | 3411 | I | - |

| | | | | | | | | | | | | |
|---|---|---|---|---|---|---|---|---|---|---|---|---|
| 8 | 0.5 | GY/WH | 3411 | I | - | Driver Mirror Motor Fold Out Control | 8 | 0.75 | GY/WH | 3411 | I | - |
| 9 | 0.5 | WH/L-GN | 3412 | I | - | Driver Mirror Motor Fold In Control | 9 | 0.75 | WH/L-GN | 3412 | I | - |
| 10 | 0.35 | GY/BN | 3394 | I | - | Driver Mirror Position Sensor Up (+) Down (-) Signal | 10 | 0.35 | GY/BN | 3394 | I | - |
| 11 | 0.35 | BN/BK | 3389 | I | - | Driver Mirror Motor Right (+) Left (-) Control | 11 | 0.75 | BN/BK | 3389 | I | - |
| 12 | 0.35 | VT/RD | 3392 | I | - | Driver Mirror Position Sensor High Reference | 12 | 0.35 | VT/RD | 3392 | I | - |
| 13 | 0.35 | WH/YE | 3395 | I | - | Driver Mirror Position Sensor Left (-) Right (+) Signal | 13 | 0.35 | WH/YE | 3395 | III | - |
| 14 | 0.35 | BK/BN | 3393 | I | - | Driver Mirror Position Sensor Low Reference | 14 | 0.35 | BK/BN | 3393 | III | - |
| 15-16 | - | - | - | - | - | Not Occupied | 15-16 | - | - | - | - | - |
| 17 | 0.5 | BK | 1150 | I | - | Ground | 17 | 0.35 | BK | 1150 | I | - |
| 18-21 | - | - | - | - | - | Not Occupied | 18-21 | - | - | - | - | - |
| 22 | 0.35 | RD/VT | 1940 | I | - | Battery Positive Voltage | 22 | 0.5 | RD/VT | 1940 | I | - |
| 23 | 0.75 | BK | 1150 | I | - | Ground | 23 | 0.75 | BK | 1150 | I | - |
| 24 | - | - | - | - | - | Not Occupied | 24 | - | - | - | - | - |
| 25 | 0.5 | GY/WH | 3411 | II | - | Driver Mirror Motor Fold Out Control | 25 | 0.75 | GY/WH | 3411 | III | - |
| 26 | 0.5 | WH/L-GN | 3412 | II | - | Driver Mirror Motor Fold In Control | 26 | 0.75 | WH/L-GN | 3412 | III | - |
| 27-28 | - | - | - | - | - | Not Occupied | 27-28 | - | - | - | - | - |
| 29 | 0.35 | GY | 1136 | I | - | Power Window Master Switch Left Front Down Signal | 29 | 0.35 | GY | 1136 | I | - |
| 30 | 0.35 | L-GN/WH | 1300 | I | - | Power Window Master Switch Left Front Up Signal | 30 | 0.35 | L-GN/WH | 1300 | I | - |
| 31 | 0.35 | L-GN/VT | 7628 | I | - | Power Window Motor Left Front Express Control | 31 | 0.35 | L-GN/VT | 7628 | I | - |
| 32 | 0.35 | BK/D-BU | 5978 | I | - | Memory Switch Low Reference | 32 | 0.35 | BK/D-BU | 5978 | I | - |
| 33 | 0.35 | D-BU/L-GN | 614 | I | - | Memory Seat Switch Set Signal | 33 | 0.35 | D-BU/L-GN | 614 | I | - |
| 34 | 0.35 | WH | 615 | I | - | Memory Seat Switch Signal (1) | 34 | 0.35 | WH | 615 | I | - |
| 35 | - | - | - | - | - | Not Occupied | 35 | - | - | - | - | - |

| | | | | | | | | | | | | |
|---|---|---|---|---|---|---|---|---|---|---|---|---|
| 36 | 0.5 | L-GN/YE | 6134 | I | - | Linear Interconnect Network Bus 3 | 36 | 0.5 | L-GN/YE | 6134 | I | - |
| 37 | 0.5 | L-GN/WH | 7530 | I | - | Linear Interconnect Network Bus 8 | 37 | 0.5 | L-GN/WH | 7530 | III | - |
| 38-39 | - | - | - | - | - | Not Occupied | 38-39 | - | - | - | - | - |
| 40 | 0.35 | BN/RD | 3265 | I | - | Child Security Lock Switch Signal | 40 | 0.35 | YE/BN | 3265 | I | - |
| 41 | 0.35 | WH/VT | 3270 | I | - | Driver Door Lock Motor Status | 41 | 0.35 | WH/VT | 3270 | I | - |
| 42 | 0.35 | L-GN/BK | 3396 | I | - | Co-Driver Mirror Motor Right (+) Left (-) Control | 42 | 0.75 | L-GN/BK | 3396 | I | - |
| 43 | 0.35 | YE/VT | 3397 | I | - | Co-Driver Mirror Motor Up (+) Down (-) Control | 43 | 0.75 | YE/VT | 3397 | I | - |
| 44 | 0.35 | WH | 3398 | I | - | Co-Driver Mirror Motor Common Control | 44 | 0.75 | WH | 3398 | I | - |
| 45 | 0.35 | GY | 5697 | I | - | Child Lockout Indicator | 45 | 0.35 | GY | 5697 | I | - |
| 46 | 0.35 | D-BU/VT | 1124 | I | - | Door Lock Key Switch Unlock Signal | 46 | 0.35 | D-BU/VT | 1124 | I | - |
| 47 | 0.35 | BN/WH | 781 | I | - | Driver Door Lock Switch Unlock Signal | 47 | 0.35 | BN/WH | 781 | I | - |
| 48 | 0.35 | BN/YE | 780 | I | - | Driver Door Lock Switch Lock Signal | 48 | 0.35 | BN/YE | 780 | I | - |

## X506 Driver Door Trim Harness to Driver Door Harness

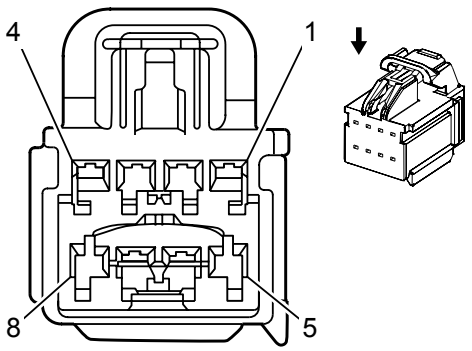


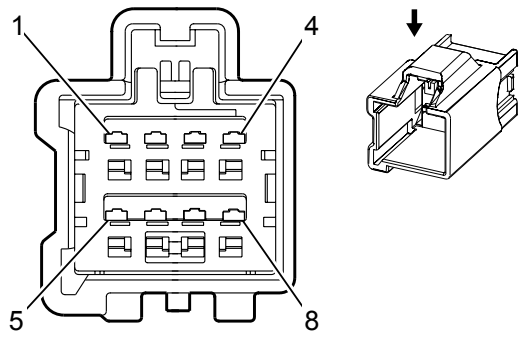


### Connector Part Information

Harness Type: Driver Door Trim

OEM Connector: 10846802

Service Connector: 19153166

Description: 8-Way F 1.5 Kaizen YESC Series (L-GY)

### Connector Part Information

Harness Type: Driver Door

OEM Connector: 10847035

Service Connector: Service by Harness - See Part Catalog

Description: 8-Way M 1.5 Kaizen YESC Series (L-GY)

### *Terminal Part Information*

| Terminal Type ID | Terminated Lead | Diagnostic Test Probe | Terminal Removal Tool | Service Terminal | Tray | Core Crimp | Insulation Crimp |
|---|---|---|---|---|---|---|---|
| I | Pending | J-35616-14 (GN) | J-38125-217 | Not Available | Not Available | E | 2 |
| II | Pending | J-35616-3 (GY) | J-38125-553 | 7114-4100-08 | 9 | E | C |

### *X506 Driver Door Trim Harness to Driver Door Harness*

| Pin | Size | Color | Circuit | Terminal Type ID | Option | Function | Pin | Size | Color | Circuit | Terminal Type ID | Option |
|---|---|---|---|---|---|---|---|---|---|---|---|---|
| 1-3 | - | - | - | - | - | Not Occupied | 1-3 | - | - | - | - | - |
| 4 | 0.35 | BN/YE | 780 | I | - | Driver Door Lock Switch Lock Signal | 4 | 0.35 | BN/YE | 780 | II | - |
| 5 | 0.35 | BN/WH | 781 | I | - | Driver Door Lock Switch Unlock Signal | 5 | 0.35 | BN/WH | 781 | II | - |
| 6 | 0.35 | YE | 6817 | I | - | LED Backlight Dimming Control | 6 | 0.35 | YE | 6817 | II | - |
| 7 | 0.35 | BK | 1150 | I | - | Ground | 7 | 0.5 | BK | 1150 | II | - |
| 8 | - | - | - | - | - | Not Occupied | 8 | - | - | - | - | - |

## X510 Outside Rearview Mirror to Driver Door Harness

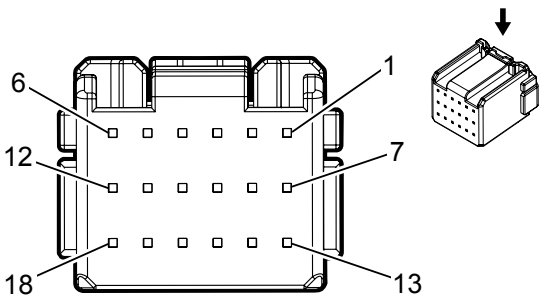


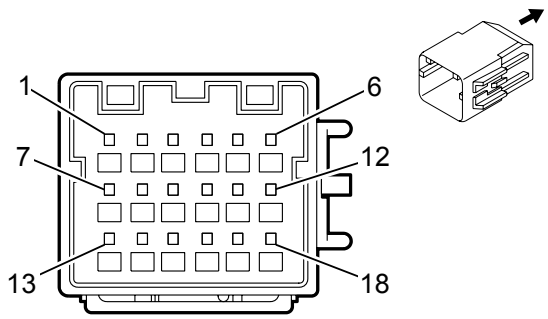


### Connector Part Information

Harness Type:

OEM Connector: ARVPB-18-3AK

Service Connector: Service by Harness – See Part Catalog

Description: 18 F 0.64 Series (BK)

### Connector Part Information

Harness Type: Driver Door

OEM Connector: 13888973

Service Connector: Service by Harness - See Part Catalog

Description: 18-Way M 0.64 Series (BK)

### *Terminal Part Information*

| Terminal Type ID | Terminated Lead | Diagnostic Test Probe | Terminal Removal Tool | Service Terminal | Tray | Core Crimp | Insulation Crimp |
|---|---|---|---|---|---|---|---|
| I | Not Available | Not Available | Not Available | Not Available | Not Available | Not Available | Not Available |
| II | Not Available | J-35616-65B (L-BU) | J-38125-553 | SNAC3W-A021T-0.64 | 20 | J | J |

### *X510 Outside Rearview Mirror to Driver Door Harness*

| Pin | Size | Color | Circuit | Terminal Type ID | Option | Function | Pin | Size | Color | Circuit | Terminal Type ID | Option |
|---|---|---|---|---|---|---|---|---|---|---|---|---|
| 1 | 0.35 | OG/WH | 5996 | I | - | Driver Outside Rear View Mirror Puddle Lamp Supply Voltage | 1 | 0.5<br>0.5 | GY/WH<br>VT/GY | 5996<br>709 | II | - |
| 2 | 0.35 | GN/BK | 1690 | I | - | Automatic Day/Night Mirror Signal | 2 | 0.35<br>0.5 | YE/BK<br>WH/VT | 1690<br>1430 | II | - |
| 3 | 0.35 | BU | 3393 | I | - | Driver Mirror Position Sensor Low Reference | 3 | 0.35 | BK/BN | 3393 | II | - |
| 4 | 0.35 | YE | 3411 | I | - | Driver Mirror Motor Fold Out Control | 4 | 0.5 | GY/WH | 3411 | II | - |
| 5 | 0.35 | BK/WH | 1150 | I | - | Ground | 5 | 0.5 | BK | 1150 | II | - |
| 6 | - | - | - | - | - | Not Occupied | 6 | - | - | - | - | - |
| 7 | 0.35 | GY | 3395 | I | - | Driver Mirror Position Sensor Left (-) Right (+) Signal | 7 | 0.35 | WH/YE | 3395 | II | - |
| 8 | 0.35 | BK | 2267 | I | - | Mirror Heating Element Supply Voltage | 8 | 0.5 | BN/OG | 2267 | II | - |
| 9 | 0.35 | BU/WH | 3390 | I | - | Driver Mirror Motor Up (+) Down (-) Control | 9 | 0.35<br>0.5 | VT/D-BU<br>VT/D-BU | 3390<br>3390 | II | - |

| | | | | | | | | | | | | |
|---|---|---|---|---|---|---|---|---|---|---|---|---|
| 10 | 0.35 | GN/WH | 3389 | I | - | Driver Mirror Motor Right (+) Left (-) Control | 10 | 0.35<br>0.5 | BN/BK<br>BN/BK | 3389<br>3389 | II | - |
| 11 | 0.35 | BK | 1150 | I | - | Ground | 11 | 0.5 | BK | 1150 | II | - |
| 12 | 0.35 | WH | 3391 | I | - | Driver Mirror Motor Common Control | 12 | 0.35<br>0.5 | YE/BN<br>YE/BN | 3391<br>3391 | II | - |
| 13 | 0.35 | RD/BU | 1314 | I | - | Left Front Turn Signal Lamp Supply Voltage | 13 | 0.5 | D-BU/WH | 1314 | II | - |
| 14 | 0.35 | GN | 3394 | I | - | Driver Mirror Position Sensor Up (+) Down (-) Signal | 14 | 0.35 | GY/BN | 3394 | II | - |
| 15 | - | - | - | - | - | Not Occupied | 15 | - | - | - | - | - |
| 16 | 0.35 | PK | 1691 | I | - | Automatic Day/Night Mirror Low Reference | 16 | 0.35 | BK/YE | 1691 | II | - |
| 17 | 0.35 | BN | 3392 | I | - | Driver Mirror Position Sensor High Reference | 17 | 0.35 | VT/RD | 3392 | II | - |
| 18 | 0.35 | L-BU | 3412 | I | - | Driver Mirror Motor Fold In Control | 18 | 0.5 | WH/L-GN | 3412 | II | - |

## X600 Passenger Door Harness to Body Harness

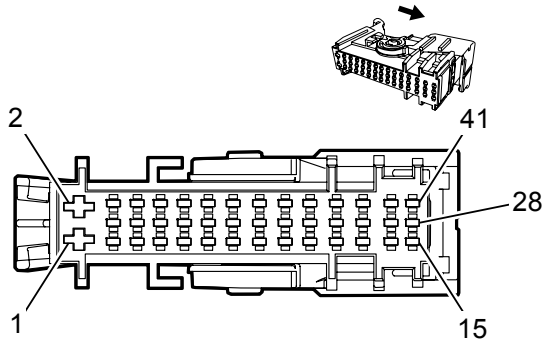


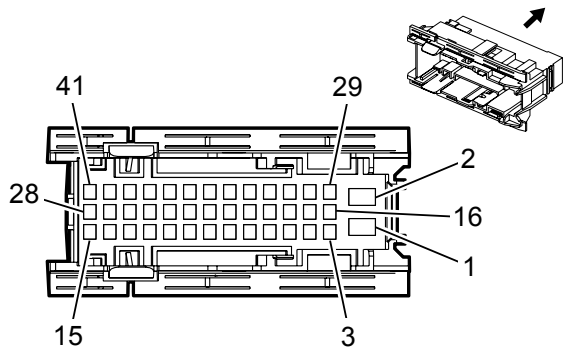


### Connector Part Information

Harness Type: Passenger Door

OEM Connector: 13600509

Service Connector: Service by Harness - See Part Catalog

Description: 41-Way F 4.8 TIMER/DSQ 1.5 Series

### Connector Part Information

Harness Type: Body

OEM Connector: 13946876

Service Connector: 13587760

Description: 41-Way M 1.5, 2.8 Series (GY)

### *Terminal Part Information*

| Terminal Type ID | Terminated Lead | Diagnostic Test Probe | Terminal Removal Tool | Service Terminal | Tray | Core Crimp | Insulation Crimp |
|---|---|---|---|---|---|---|---|
| I | Not Available | J-35616-42 (RD) | J-38125-36 | 927837-1 | 25 | A | D |
| II | Not Available | J-35616-14 (GN) | J-38125-560 | 962943-5 | 16 | E | A |
| III | Not Available | J-35616-14 (GN) | J-38125-560 | 962943-5 | 16 | Not Available | Not Available |
| IV | Not Available | J-35616-42 (RD) | J-38125-36 | Not Available | Not Available | Not Available | Not Available |
| V | Not Available | J-35616-14 (GN) | J-38125-560 | 964265-2 | 28 | E | C |
| VI | Not Available | J-35616-14 (GN) | J-38125-560 | 964265-2 | 28 | E | 2 |
| VII | Not Available | J-35616-3 (GY) | J-38125-560 | Not Available | Not Available | 2 | 4 |
| VIII | Not Available | J-35616-14 (GN) | J-38125-560 | 964265-2 | 28 | C | A |

### *X600 Passenger Door Harness to Body Harness*

| Pin | Size | Color | Circuit | Terminal Type ID | Option | Function | Pin | Size | Color | Circuit | Terminal Type ID | Option |
|---|---|---|---|---|---|---|---|---|---|---|---|---|
| 1 | 2.5 | RD/WH | 1340 | I | - | Battery Positive Voltage | 1 | 2.5 | RD/WH | 1340 | IV | - |
| 2 | 2.5 | BK | 1250 | I | - | Ground | 2 | 2.5 | BK | 1250 | IV | - |
| 3 | 0.5 | GY/L-GN | 5996 | II | - | Driver Outside Rear View Mirror Puddle Lamp Supply Voltage | 3 | 0.5 | GY/L-GN | 5996 | VI | - |
| 4 | 0.35<br>0.5 | WH<br>WH | 3398<br>3398 | III | - | Co-Driver Mirror Motor Common Control<br>Co-Driver Mirror Motor Common Control | 4 | 0.35 | WH | 3398 | VI | - |
| 5-6 | - | - | - | - | - | Not Occupied | 5-6 | - | - | - | - | - |
| 7 | 0.5 | WH/L-GN | 3412 | II | - | Driver Mirror Motor Fold | 7 | 0.5 | WH/L-GN | 3412 | VI | - |

| | | | | | | | | | | | |
|---|---|---|---|---|---|---|---|---|---|---|---|
| 7 | 0.5 | WH/L-GN | 3412 | II | - | Driver Mirror Motor Fold In Control | 7 | 0.5 | WH/L-GN | 3412 | VI | - |
| 8 | 0.5 | GY/WH | 3411 | II | - | Driver Mirror Motor Fold Out Control | 8 | 0.5 | GY/WH | 3411 | VI | - |
| 9 | 0.5 | WH/VT | 1430 | II | - | Exterior Courtesy Lamp Supply Voltage | 9 | 0.5 | WH/VT | 1430 | VI | - |
| 10 | 1 | YE/BK | 117 | II | - | Right Front Speaker Signal (-) (1) | 10 | 0.75<br>1 | YE/BK<br>YE/BK | 117<br>117 | V | - |
| 11 | 0.5 | GY/BN | 309 | II | - | Right Park Lamp Supply Voltage | 11 | 0.5 | GY/BN | 309 | VI | - |
| 12 | 0.35 | GY | 746 | III | - | Right Front Door Ajar Switch Signal | 12 | 0.35 | GY | 746 | VI | - |
| 13 | - | - | - | - | - | Not Occupied | 13 | - | - | - | - | - |
| 14 | 0.5 | BN/OG | 2134 | II | - | Right Front Side Impact Sensing Module Signal | 14 | 0.35 | BN/OG | 2134 | VI | - |
| 15 | 0.5 | BK/OG | 6629 | II | - | Right Front Side Impact Sensing Module Low Reference | 15 | 0.35 | BK/OG | 6629 | VI | - |
| 16 | - | - | - | - | - | Not Occupied | 16 | - | - | - | - | - |
| 17 | 0.35 | BN/VT | 245 | III | - | Passenger Door Lock Switch Unlock Control | 17 | 0.35 | BN/VT | 245 | VI | - |
| 18 | 0.35 | YE/BK | 244 | III | - | Passenger Door Lock Switch Lock Control | 18 | 0.35 | YE/VT | 244 | VI | - |
| 19 | 0.75 | BN/YE | 294 | II | - | Door Lock Actuator Unlock Control | 19 | 0.75 | BN/YE | 294 | V | - |
| 20 | 0.75 | GY | 295 | II | - | Door Lock Actuator Lock Control | 20 | 0.75 | GY | 295 | V | - |
| 21 | 0.5 | BK/D-BU | 61 | II | - | Outside Ambient Temperature Sensor Low Reference | 21 | 0.35 | BK/D-BU | 61 | VI | - |
| 22 | - | - | - | - | - | Not Occupied | 22 | - | - | - | - | - |
| 23 | 1 | YE | 200 | II | - | Right Front Speaker (+) (1) | 23 | 0.75<br>1 | YE<br>YE | 200<br>200 | V | - |
| 24 | 0.5 | D-BU/GY | 636 | II | - | Outside Ambient Air Temperature Sensor Signal | 24 | 0.35 | D-BU/GY | 636 | VI | - |
| 25-28 | - | - | - | - | - | Not Occupied | 25-28 | - | - | - | - | - |
| 29 | 0.35 | YE | 6817 | III | - | LED Backlight Dimming Control | 29 | 0.5 | YE | 6817 | VI | - |
| 30 | 0.35 | WH/YE | 7557 | III | - | LED Ambient Lighting Control 1 | 30 | 0.35 | WH/YE | 7557 | VI | - |
| 31 | 0.5 | BN/OG | 2267 | II | - | Mirror Heating Element Supply Voltage | 31 | 0.5 | BN/YE | 2267 | VI | - |

| | | | | | | | | | | | | |
|---|---|---|---|---|---|---|---|---|---|---|---|---|
| | | | | | | Supply Voltage | | | | | | |
| 32 | - | - | - | - | - | Not Occupied | 32 | - | - | - | - | - |
| 33 | 0.5 | L-GN/YE | 6134 | II | - | Linear Interconnect Network Bus 3 | 33 | 0.5 | L-GN/YE | 6134 | VI | - |
| 34 | 0.5 | L-GN/WH | 7530 | II | - | Linear Interconnect Network Bus 8 | 34 | 0.5 | L-GN/WH | 7530 | VI | - |
| 35 | - | - | - | - | - | Not Occupied | 35 | - | - | - | - | - |
| 36 | 0.35<br>0.5 | L-GN/BK<br>L-GN/BK | 3396<br>3396 | III | - | Co-Driver Mirror Motor Right (+) Left (-) Control<br>Co-Driver Mirror Motor Right (+) Left (-) Control | 36 | 0.35 | L-GN/BK | 3396 | VI | - |
| 37 | - | - | - | - | - | Not Occupied | 37 | - | - | - | - | - |
| 38 | 0.35<br>0.5 | YE/VT<br>YE/VT | 3397<br>3397 | III | - | Co-Driver Mirror Motor Up (+) Down (-) Control<br>Co-Driver Mirror Motor Up (+) Down (-) Control | 38 | 0.35 | YE/VT | 3397 | VI | - |
| 39-40 | - | - | - | - | - | Not Occupied | 39-40 | - | - | - | - | - |
| 41 | 0.5 | L-GN/VT | 1315 | II | - | Right Front Turn Signal Lamp Supply Voltage | 41 | 0.75 | L-GN/VT | 1315 | V | - |

## X605 Passenger Door Harness to Passenger Door Trim Harness

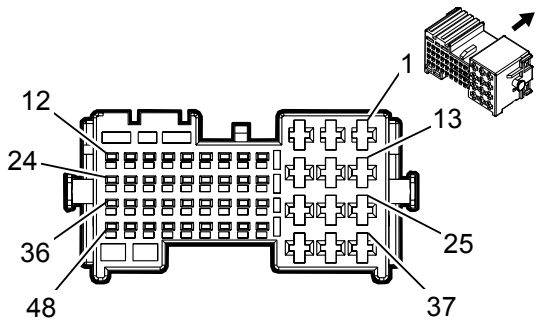


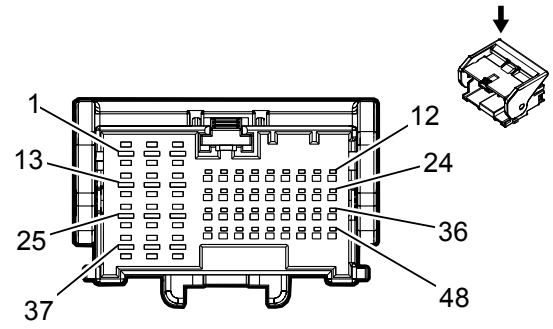


### Connector Part Information

Harness Type: Passenger Door

OEM Connector: 13889713

Service Connector: Service by Harness - See Part Catalog

Description: 48-Way F 1.2 MCON, 2.8 MCP Series

### Connector Part Information

Harness Type: Passenger Door Trim

OEM Connector: 15512031

Service Connector: Service by Harness - See Part Catalog

Description: 48-Way M 1.2 MCON, 2.8 MCP Series (BK)

### *Terminal Part Information*

| Terminal Type ID | Terminated Lead | Diagnostic Test Probe | Terminal Removal Tool | Service Terminal | Tray | Core Crimp | Insulation Crimp |
|---|---|---|---|---|---|---|---|
| I | Not Available | Not Available | Not Available | Not Available | Not Available | Not Available | Not Available |
| II | Not Available | J-35616-35 (VT) | J-38125-557 | 1-968857-3 | 7 | C | 1 |
| III | Not Available | J-35616-5 (PU) | J-38125-36 | Not Available | Not Available | Not Available | Not Available |
| IV | 13575352 | J-35616-5 (PU) | J-38125-36 | Not Available | Not Available | C | 4 |

### *X605 Passenger Door Harness to Passenger Door Trim Harness*

| Pin | Size | Color | Circuit | Terminal Type ID | Option | Function | Pin | Size | Color | Circuit | Terminal Type ID | Option |
|---|---|---|---|---|---|---|---|---|---|---|---|---|
| 1 | 0.35 | YE | 6817 | I | - | LED Backlight Dimming Control | 1 | 0.35 | YE | 6817 | III | - |
| 2 | 0.35 | WH/YE | 7557 | I | - | LED Ambient Lighting Control 1 | 2 | 0.35 | WH/YE | 7557 | III | - |
| 3-5 | - | - | - | - | - | Not Occupied | 3-5 | - | - | - | - | - |
| 6 | 0.35<br>0.5 | YE/VT<br>YE/VT | 3397<br>3397 | I | - | Co-Driver Mirror Motor Up (+) Down (-) Control<br>Co-Driver Mirror Motor Up (+) Down (-) Control | 6 | 0.75 | YE/VT | 3397 | I | - |
| 7 | 0.35<br>0.5 | WH<br>WH | 3398<br>3398 | I | - | Co-Driver Mirror Motor Common Control<br>Co-Driver Mirror Motor Common Control | 7 | 0.75 | WH | 3398 | I | - |
| 8 | 0.5 | YE/GY | 3413 | I | - | Co-Driver Mirror Motor Fold Out Control | 8 | 0.75 | YE/WH | 3413 | I | - |
| 9 | 0.5 | D-BU/GY | 3414 | I | - | Co-Driver Mirror Motor Fold In Control | 9 | 0.75 | D-BU/GY | 3414 | I | - |

| | | | | | | | | | | | | |
|---|---|---|---|---|---|---|---|---|---|---|---|---|
| 10 | 0.35 | D-BU/YE | 3401 | I | - | Co-Driver Mirror Position Sensor Up (+) Down (-) Signal | 10 | 0.35 | D-BU/YE | 3401 | I | - |
| 11 | 0.35<br>0.5 | L-GN/BK<br>L-GN/BK | 3396<br>3396 | I | - | Co-Driver Mirror Motor Right (+) Left (-) Control<br>Co-Driver Mirror Motor Right (+) Left (-) Control | 11 | 0.75 | L-GN/BK | 3396 | I | - |
| 12 | 0.35 | YE/RD | 3399 | I | - | Co-Driver Mirror Position Sensor High Reference | 12 | 0.35 | YE/RD | 3399 | I | - |
| 13 | 0.35 | VT/WH | 3403 | I | - | Co-Driver Mirror Position Sensor Left (-) Right (+) Signal | 13 | 0.35 | VT/WH | 3403 | III | - |
| 14 | 0.35 | BK/L-GN | 3400 | I | - | Co-Driver Mirror Position Sensor Low Reference | 14 | 0.35 | BK/L-GN | 3400 | III | - |
| 15 | 2.5 | BK | 1250 | II | - | Ground | 15 | 2.5 | BK | 1250 | IV | - |
| 16 | - | - | - | - | - | Not Occupied | 16 | - | - | - | - | - |
| 17 | 0.5 | BK | 1250 | I | - | Ground | 17 | 0.35 | BK | 1250 | I | - |
| 18-24 | - | - | - | - | - | Not Occupied | 18-24 | - | - | - | - | - |
| 25 | 2.5 | L-GN/GY | 3387 | II | - | Power Window Motor Co-Driver Up Control | 25 | 2.5 | L-GN/GY | 3387 | IV | - |
| 26 | 2.5 | YE/D-BU | 3388 | II | - | Power Window Motor Co-Driver Down Control | 26 | 2.5 | YE/D-BU | 3388 | IV | - |
| 27 | 2.5 | RD/WH | 1340 | II | - | Battery Positive Voltage | 27 | 2.5 | RD/WH | 1340 | IV | - |
| 28-35 | - | - | - | - | - | Not Occupied | 28-35 | - | - | - | - | - |
| 36 | 0.5 | L-GN/YE | 6134 | I | - | Linear Interconnect Network Bus 3 | 36 | 0.5 | L-GN/YE | 6134 | I | - |
| 37 | 0.5 | L-GN/WH | 7530 | I | - | Linear Interconnect Network Bus 8 | 37 | 0.5 | L-GN/WH | 7530 | III | - |
| 38-45 | - | - | - | - | - | Not Occupied | 38-45 | - | - | - | - | - |
| 46 | 0.35 | GY | 746 | I | - | Right Front Door Ajar Switch Signal | 46 | 0.35 | GY | 746 | I | - |
| 47 | 0.35 | BN/VT | 245 | I | - | Passenger Door Lock Switch Unlock Control | 47 | 0.35 | BN/VT | 245 | I | - |
| 48 | 0.35 | YE/BK | 244 | I | - | Passenger Door Lock Switch Lock Control | 48 | 0.35 | YE/VT | 244 | I | - |

## X606 Passenger Door Trim Harness to Passenger Door Harness

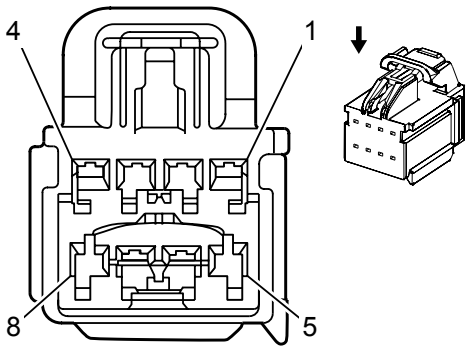


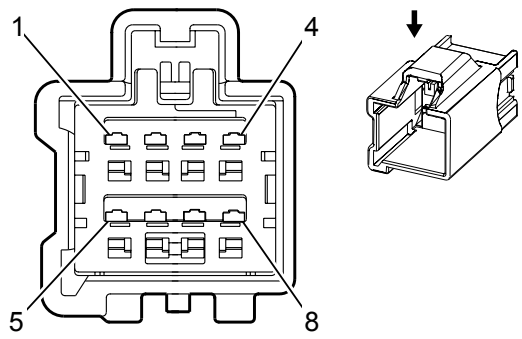


### Connector Part Information

Harness Type: Passenger Door Trim

OEM Connector: 10846802

Service Connector: 19153166

Description: 8-Way F 1.5 Kaizen YESC Series (L-GY)

### Connector Part Information

Harness Type: Passenger Door

OEM Connector: 10847035

Service Connector: Service by Harness - See Part Catalog

Description: 8-Way M 1.5 Kaizen YESC Series (L-GY)

### *Terminal Part Information*

| Terminal Type ID | Terminated Lead | Diagnostic Test Probe | Terminal Removal Tool | Service Terminal | Tray | Core Crimp | Insulation Crimp |
|---|---|---|---|---|---|---|---|
| I | Not Available | J-35616-14 (GN) | J-38125-217 | Not Available | Not Available | E | 2 |
| II | Not Available | J-35616-3 (GY) | J-38125-553 | 7114-4100-08 | 9 | E | C |

### *X606 Passenger Door Trim Harness to Passenger Door Harness*

| Pin | Size | Color | Circuit | Terminal Type ID | Option | Function | Pin | Size | Color | Circuit | Terminal Type ID | Option |
|---|---|---|---|---|---|---|---|---|---|---|---|---|
| 1-3 | - | - | - | - | - | Not Occupied | 1-3 | - | - | - | - | - |
| 4 | 0.35 | YE/VT | 244 | I | - | Passenger Door Lock Switch Lock Control | 4 | 0.35 | YE/BK | 244 | II | - |
| 5 | 0.35 | BN/VT | 245 | I | - | Passenger Door Lock Switch Unlock Control | 5 | 0.35 | BN/VT | 245 | II | - |
| 6 | 0.35 | YE | 6817 | I | - | LED Backlight Dimming Control | 6 | 0.35 | YE | 6817 | II | - |
| 7 | 0.35 | BK | 1250 | I | - | Ground | 7 | 0.5 | BK | 1250 | II | - |
| 8 | - | - | - | - | - | Not Occupied | 8 | - | - | - | - | - |

## X610 Outside Rearview Mirror to Passenger Door Harness

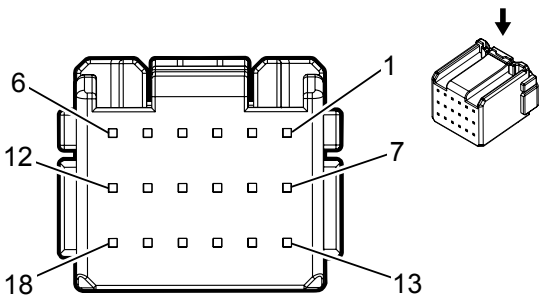


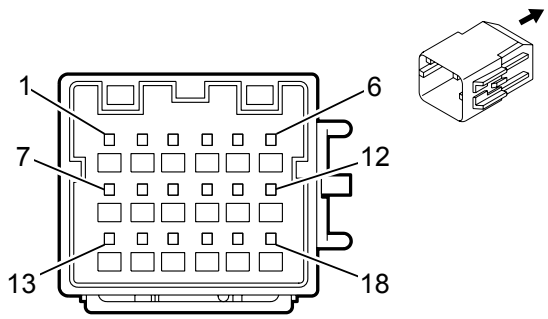


### Connector Part Information

Harness Type:

OEM Connector: ARVPB-18-3AK

Service Connector: Service by Harness – See Part Catalog

Description: 18 F 0.64 Series (BK)

### Connector Part Information

Harness Type: Passenger Door

OEM Connector: 13888973

Service Connector: Service by Harness - See Part Catalog

Description: 18-Way M 0.64 Series (BK)

### *Terminal Part Information*

| Terminal Type ID | Terminated Lead | Diagnostic Test Probe | Terminal Removal Tool | Service Terminal | Tray | Core Crimp | Insulation Crimp |
|---|---|---|---|---|---|---|---|
| I | Not Available | Not Available | Not Available | Not Available | Not Available | Not Available | Not Available |
| II | Not Available | J-35616-65B (L-BU) | J-38125-553 | SNAC3W-A021T-0.64 | 20 | J | J |

### *X610 Outside Rearview Mirror to Passenger Door Harness*

| Pin | Size | Color | Circuit | Terminal Type ID | Option | Function | Pin | Size | Color | Circuit | Terminal Type ID | Option |
|---|---|---|---|---|---|---|---|---|---|---|---|---|
| 1 | 0.35 | OG/WH | 5996 | I | - | Driver Outside Rear View Mirror Puddle Lamp Supply Voltage | 1 | 0.5<br>0.5 | GY/L-GN<br>GY/BN | 5996<br>309 | II | - |
| 2 | | | | | | | 2 | 0.5 | WH/VT | 1430 | II | - |
| 3 | 0.35 | BU | 3400 | I | - | Co-Driver Mirror Position Sensor Low Reference | 3 | 0.35 | BK/L-GN | 3400 | II | - |
| 4 | 0.35 | YE | 3413 | I | - | Co-Driver Mirror Motor Fold Out Control | 4 | 0.5<br>0.5 | GY/WH<br>YE/GY | 3411<br>3413 | II | - |
| 5 | 0.35 | BK/WH | 1250 | I | - | Ground | 5 | 0.5 | BK | 1250 | II | - |
| 6 | - | - | - | - | - | Not Occupied | 6 | - | - | - | - | - |
| 7 | 0.35 | GY | 3403 | I | - | Co-Driver Mirror Position Sensor Left (-) Right (+) Signal | 7 | 0.35 | VT/WH | 3403 | II | - |
| 8 | 0.35 | BK | 2267 | I | - | Mirror Heating Element Supply Voltage | 8 | 0.5 | BN/OG | 2267 | II | - |
| 9 | 0.35 | BU/WH | 3397 | I | - | Co-Driver Mirror Motor Up (+) Down (-) Control | 9 | 0.35<br>0.5 | YE/VT<br>YE/VT | 3397<br>3397 | II | - |

| | | | | | | | | | | | | |
|---|---|---|---|---|---|---|---|---|---|---|---|---|
| 10 | 0.35 | GN/WH | 3396 | I | - | Co-Driver Mirror Motor Right (+) Left (-) Control | 10 | 0.35<br>0.5 | L-GN/BK<br>L-GN/BK | 3396<br>3396 | II | - |
| 11 | 0.35 | BK | 1250 | I | - | Ground | 11 | 0.5 | BK | 1250 | II | - |
| 12 | 0.35 | WH | 3398 | I | - | Co-Driver Mirror Motor Common Control | 12 | 0.35<br>0.5 | WH<br>WH | 3398<br>3398 | II | - |
| 13 | 0.35 | RD/BU | 1315 | I | - | Right Front Turn Signal Lamp Supply Voltage | 13 | 0.5 | L-GN/VT | 1315 | II | - |
| 14 | 0.35 | GN | 3401 | I | - | Co-Driver Mirror Position Sensor Up (+) Down (-) Signal | 14 | 0.35 | D-BU/YE | 3401 | II | - |
| 15 | | | | | | | 15 | 0.5 | D-BU/GY | 636 | II | - |
| 16 | | | | | | | 16 | 0.5 | BK/D-BU | 61 | II | - |
| 17 | 0.35 | BN | 3399 | I | - | Co-Driver Mirror Position Sensor High Reference | 17 | 0.35 | YE/RD | 3399 | II | - |
| 18 | 0.35 | L-BU | 3414 | I | - | Co-Driver Mirror Motor Fold In Control | 18 | 0.5<br>0.5 | WH/L-GN<br>D-BU/GY | 3412<br>3414 | II | - |

## X700 Left Rear Door Harness to Body Harness

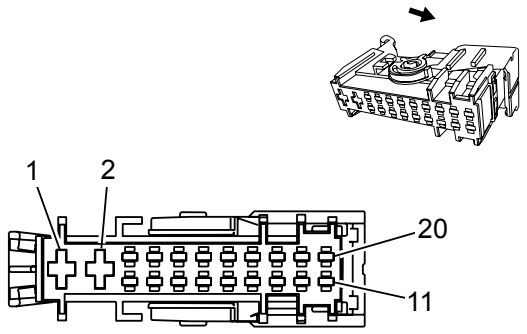


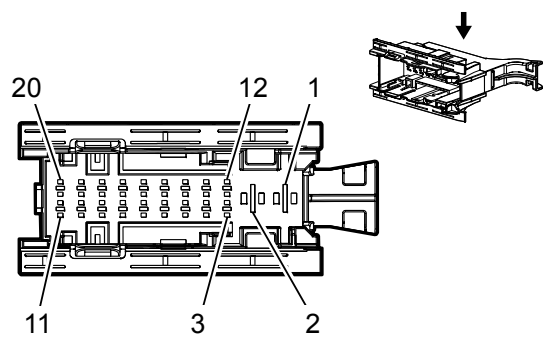


### Connector Part Information

Harness Type: Left Rear Door

OEM Connector: 13600493

Service Connector: Service by Harness - See Part Catalog

Description: 20-Way F 1.5, 4.8 Timer DSQ Series (GY)

### Connector Part Information

Harness Type: Body

OEM Connector: 13600495

Service Connector: 13576560

Description: 20-Way M 1.5, 5.8 Timer Series (GY)

### *Terminal Part Information*

| Terminal Type ID | Terminated Lead | Diagnostic Test Probe | Terminal Removal Tool | Service Terminal | Tray | Core Crimp | Insulation Crimp |
|---|---|---|---|---|---|---|---|
| I | Pending | J-35616-42 (RD) | J-38125-36 | 927837-1 | 25 | A | D |
| II | Pending | J-35616-14 (GN) | J-38125-560 | 962943-5 | 16 | E | A |
| III | Pending | J-35616-14 (GN) | J-38125-560 | 962943-5 | 16 | Not Available | Not Available |
| IV | Pending | J-35616-42 (RD) | J-38125-36 | 964328-1 | 25 | 4 | B |
| V | Pending | J-35616-42 (RD) | J-38125-36 | Not Available | Not Available | Not Available | Not Available |
| VI | Pending | J-35616-14 (GN) | J-38125-560 | 964265-2 | 28 | E | C |
| VII | Pending | J-35616-14 (GN) | J-38125-560 | 964265-2 | 28 | E | 2 |
| VIII | Pending | J-35616-14 (GN) | J-38125-560 | 964265-2 | 28 | C | A |

### *X700 Left Rear Door Harness to Body Harness*

| Pin | Size | Color | Circuit | Terminal Type ID | Option | Function | Pin | Size | Color | Circuit | Terminal Type ID | Option |
|---|---|---|---|---|---|---|---|---|---|---|---|---|
| 1 | 2.5 | RD/D-BU | 1842 | I | - | Battery Positive Voltage | 1 | 2.5 | RD/D-BU | 1842 | V | - |
| 2 | 3 | BK | 1150 | IV | - | Ground | 2 | 4 | BK | 1150 | V | - |
| 3-6 | - | - | - | - | - | Not Occupied | 3-6 | - | - | - | - | - |
| 7 | 1 | L-GN | 199 | II | - | Left Rear Speaker (+) | 7 | 0.5<br>1 | L-GN<br>L-GN | 199<br>199 | VII | - |
| 8 | - | - | - | - | - | Not Occupied | 8 | - | - | - | - | - |
| 9 | 0.75 | WH/D-BU | 3266 | II | - | Child Security Lock Motor Unlock Control | 9 | 0.75 | WH/D-BU | 3266 | VI | - |
| 10 | 0.75 | BN/YE | 294 | II | - | Door Lock Actuator | 10 | 0.75 | BN/YE | 294 | VI | - |

| | | | | | | | | | | | | |
|---|---|---|---|---|---|---|---|---|---|---|---|---|
| 10 | 0.75 | BN/YE | 294 | II | - | Door Lock Actuator Unlock Control | 10 | 0.75 | BN/YE | 294 | VI | - |
| 11 | 0.75 | GY | 295 | II | - | Door Lock Actuator Lock Control | 11 | 0.75 | GY | 295 | VI | - |
| 12-15 | - | - | - | - | - | Not Occupied | 12-15 | - | - | - | - | - |
| 16 | 1 | L-GN/BK | 116 | II | - | Left Rear Speaker Signal (-) | 16 | 0.5<br>1 | L-GN/BK<br>L-GN/BK | 116<br>116 | VII | - |
| 17 | 0.5 | OG/D-BU | 6620 | II | - | Left Middle Side Impact Sensing Module Signal | 17 | 0.35 | OG/D-BU | 6620 | VII | - |
| 18 | 0.5 | BK/OG | 6621 | II | - | Left Middle Side Impact Sensing Module Low Reference | 18 | 0.35 | BK/OG | 6621 | VII | - |
| 19 | 0.35 | BN/WH | 3269 | III | - | Child Security Lock Motor Status Signal Left Rear | 19 | 0.35 | BN/WH | 3269 | VII | - |
| 20 | 0.5 | L-GN/GY | 6135 | II | - | Linear Interconnect Network Bus 4 | 20 | 0.5 | L-GN/GY | 6135 | VII | - |

## X800 Right Rear Door Harness to Body Harness

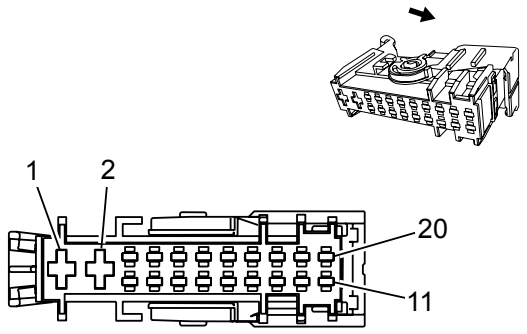


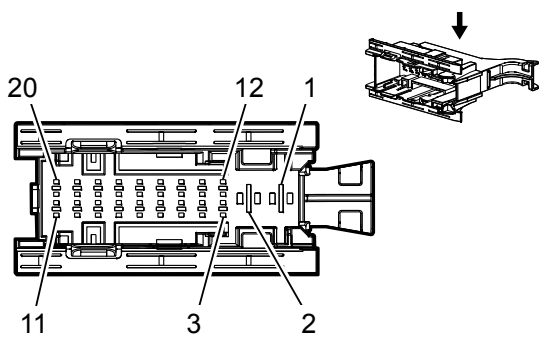


### Connector Part Information

Harness Type: Right Rear Door

OEM Connector: 13600493

Service Connector: Service by Harness - See Part Catalog

Description: 20-Way F 1.5, 4.8 Timer DSQ Series (GY)

### Connector Part Information

Harness Type: Body

OEM Connector: 13600495

Service Connector: 13576560

Description: 20-Way M 1.5, 5.8 Timer Series (GY)

### *Terminal Part Information*

| Terminal Type ID | Terminated Lead | Diagnostic Test Probe | Terminal Removal Tool | Service Terminal | Tray | Core Crimp | Insulation Crimp |
|---|---|---|---|---|---|---|---|
| I | Pending | J-35616-42 (RD) | J-38125-36 | 927837-1 | 25 | A | D |
| II | Pending | J-35616-14 (GN) | J-38125-560 | 962943-5 | 16 | E | A |
| III | Pending | J-35616-14 (GN) | J-38125-560 | 962943-5 | 16 | Not Available | Not Available |
| IV | Pending | J-35616-42 (RD) | J-38125-36 | Not Available | Not Available | Not Available | Not Available |
| V | Pending | J-35616-14 (GN) | J-38125-560 | 964265-2 | 28 | E | C |
| VI | Pending | J-35616-14 (GN) | J-38125-560 | 964265-2 | 28 | E | 2 |
| VII | Pending | J-35616-14 (GN) | J-38125-560 | 964265-2 | 28 | C | A |

### *X800 Right Rear Door Harness to Body Harness*

| Pin | Size | Color | Circuit | Terminal Type ID | Option | Function | Pin | Size | Color | Circuit | Terminal Type ID | Option |
|---|---|---|---|---|---|---|---|---|---|---|---|---|
| 1 | 2.5 | RD/WH | 1340 | I | - | Battery Positive Voltage | 1 | 2.5 | RD/WH | 1340 | IV | - |
| 2 | 2.5 | BK | 1250 | I | - | Ground | 2 | 2.5 | BK | 1250 | III | - |
| 3-6 | - | - | - | - | - | Not Occupied | 3-6 | - | - | - | - | - |
| 7 | 1 | WH | 46 | II | - | Right Rear Speaker (+) | 7 | 0.5<br>1 | WH<br>WH | 46<br>46 | VI | - |
| 8 | - | - | - | - | - | Not Occupied | 8 | - | - | - | - | - |
| 9 | 0.75 | WH/D-BU | 3266 | II | - | Child Security Lock Motor Unlock Control | 9 | 0.75 | WH/D-BU | 3266 | V | - |
| 10 | 0.75 | BN/YE | 294 | II | - | Door Lock Actuator Unlock Control | 10 | 0.75 | BN/YE | 294 | V | - |

| | | | | | | | | | | | | |
|---|---|---|---|---|---|---|---|---|---|---|---|---|
| 11 | 0.75 | GY | 295 | II | - | Door Lock Actuator Lock Control | 11 | 0.75 | GY | 295 | V | - |
| 12-15 | - | - | - | - | - | Not Occupied | 12-15 | - | - | - | - | - |
| 16 | 1 | D-BU/BK | 115 | II | - | Right Rear Speaker Signal (-) | 16 | 0.5<br>1 | D-BU/BK<br>D-BU/BK | 115<br>115 | VI | - |
| 17 | 0.5 | OG/VT | 6624 | II | - | Right Middle Side Impact Sensing Module Signal | 17 | 0.35 | OG/VT | 6624 | VI | - |
| 18 | 0.5 | BK/OG | 6625 | II | - | Right Middle Side Impact Sensing Module Low Reference | 18 | 0.35 | BK/OG | 6625 | VI | - |
| 19 | 0.35 | GY/BK | 3268 | III | - | Child Security Lock Motor Status Signal Right Rear | 19 | 0.35 | GY/BK | 3268 | VI | - |
| 20 | 0.5 | L-GN/GY | 6135 | II | - | Linear Interconnect Network Bus 4 | 20 | 0.5 | L-GN/GY | 6135 | VI | - |

# Description and Operation

## Power Mode Description and Operation

### Serial Data Power Mode Master

#### Power Moding Description and Operation Block Diagram

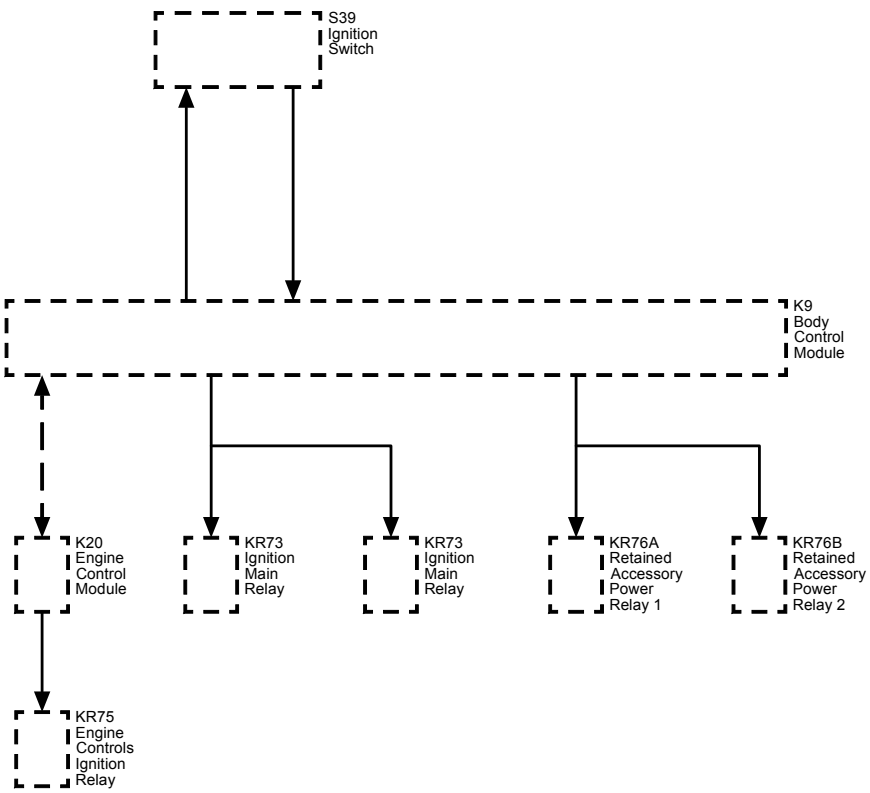


Power to many of this vehicles circuits is controlled by the module that is designated the power mode master. This vehicles power mode master is the body control module (BCM). The BCM has multiple B+ circuits that feed into it. Each of those circuits are partitioned within the controller to drive certain outputs of the vehicle's body functions. An open or short in any one of the B+ circuits may induce multiple codes/or a section of non-functionality within the BCM with the rest of the BCM functioning normally. In this case it is useful to refer to the power distribution schematics to determine if the non-functional partition of the controller shares a common B+ circuit. The ignition switch is a low current switch with multiple discrete ignition switch signals to the power mode master for determination of the power mode that will be sent over the serial data circuits to the other modules that need this information. The power mode master will also activate relays and other direct outputs of the power mode master as needed. The power mode master determines which power mode (Off, Accessory, Run, Crank Request) is required, and reports this information to other modules via serial data. Modules which have switched voltage inputs may operate in a default mode if the power mode serial data message does not match what the individual module can see from its own connections.

The power mode master receives ignition switch signals to identify the operators desired power mode. The Power Mode Parameter tables below illustrate the correct state of these input parameters (circuits) in correspondence to the ignition switch position:

#### *Power Mode Parameters*

| Ignition Switch Position | Power Mode Transmitted | Ign. Off/Run/Crank (Off/Run Crank Voltage Circuit) | Ignition Accessory/Run (Accessory Voltage Circuit) | Ignition Run/Crank (Ignition 1 Voltage Circuit) |
|---|---|---|---|---|
| Off Key Out | Off | Key Out / ACC | Inactive | Inactive |
| Off Key IN | Off | Key In / Off | Inactive | Inactive |

| | | | | |
|---|---|---|---|---|
| Accessory | Accessory | Key Out / ACC | Active | Inactive |
| Run | Run | Run | Active | Active |
| Start | Crank Request | Crank | Inactive | Active |

### Relay Controlled Power Mode

The BCM uses the discrete ignition switch inputs Off/Run/Crank Voltage, Accessory Voltage, and Ignition 1 Voltage, to distinguish the correct power mode. The BCM, after determining the desired power mode, will activate the appropriate relays for that power mode.

The retained accessory power relay 1 and retained accessory power relay 2 remain on for a timed period after the Ignition key is removed. Refer to Retained Accessory Power Description and Operation for more information on the retained accessory power function.

### Battery Saver Mode (Transport Mode)

Battery saver mode (transport mode) reduces the parasitic load of some modules during overseas shipment or during vehicle storage conditions. This improves the drain time on the battery (up to 70 days without the battery going dead). When a vehicle is in transport/storage, some features may have reduced functionality while in the battery saver mode, such as disabling keyless entry, afterblow, and content theft features. Battery saver mode is initiated by turning on the hazard flashers, applying the brake pedal, and then turning the ignition key to the start position or pushing the ignition mode switch with the foot on the brake for greater than 15 seconds. The mode is disengaged by repeating the previous process. The driver information center (if equipped) will display Transport Mode is On when battery saver mode is enabled and Transport Mode is Off when battery saver mode is disabled. For vehicles not equipped with a driver information center, the battery indicator light will constantly flash on the Instrument Cluster when battery saver mode is enabled. This feature can be used as many times as necessary if the vehicle is to be stored for an extended period of time.

### BCM Awake/Sleep States

The BCM is able to control or perform all of the BCM functions in the awake state. The BCM enters the sleep state when active control or normal monitoring of system functions has stopped and a time limit has passed. The BCM must detect certain wake-up inputs before entering the awake state. The BCM monitors for these inputs during the sleep state.

The BCM will enter the awake state if any of the following wake-up inputs are detected:

- Activity on the serial data line
- Detection of a battery reconnect
- Any door open signal
- Headlamps ON
- Key-in-ignition
- Ignition ON
- Park lamps ON
- Keyless entry or remote start message

The BCM will enter a sleep state when all of the following conditions exist:

- The ignition switch is OFF, key out.
- Ignition OFF, transmitter is out of range
- No activity exists on the serial data line.
- No outputs are commanded.
- No delay timers are actively counting.
- No wake-up inputs are present.

If all these conditions are met, the BCM will enter a low power or sleep condition.

# Retained Accessory Power Description and Operation

## Retained Accessory Power

### RAP Description and Operation Block Diagram

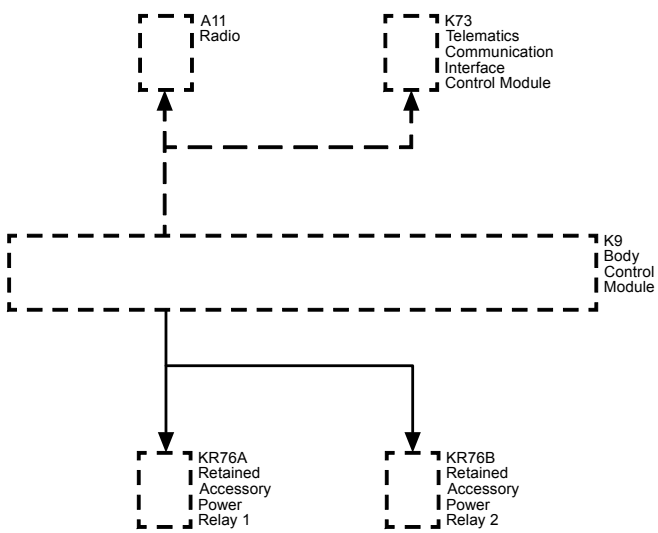


The body control module (BCM) monitors the ignition switch position, battery condition, and each door ajar/open switch status to determine whether the retained accessory power should be initiated or terminated. Retained accessory power is controlled by two different methods; relay control and serial data. Some modules receive a retained accessory power message from the BCM over the serial data circuits. Serial data controlled retained accessory power is deactivated as required by their modules retained accessory power mode operation. Other subsystems are activated directly by the BCM through a relay. Components and systems that are active in retained accessory power are also activated anytime the ignition is any position other than OFF regardless of the door switch signals.

### Relay Controlled Retained Accessory Power

The BCM keeps the retained accessory power relay 1 and retained accessory power relay 2 energized during all power modes, except Off-Awake and Crank. The retained accessory power relay 1 and retained accessory power relay 2 are also energized for approximately 10 minutes after shutting the ignition OFF and removing the key, providing no door is opened.

Relay controlled retained accessory power will end when one of the following conditions is met:

- The BCM receives an input from any door ajar or open switch indicating the opening of any door after the ignition key is out of the ignition.

  **Note:** If the BCM is receiving any door ajar or open signal from those switches when the ignition key is turned OFF, retained accessory power will not initiate.

- The BCM internal timer for the retained accessory power expires after approximately 10 minutes.
- The BCM detects a decrease in battery capacity below a prescribed limit.

Systems powered by the retained accessory power relay 1 and retained accessory power relay 2 during the retained accessory power mode are as follows:

**Note:** The vehicle may not be equipped with all components as listed below.

- Accessory Power Receptacle
- Cigarette Lighter Receptacle
- Sunroof Control Module
- Sunroof Switch
- Sliding Rear Window Switch
- Mobile Device Wireless Charger Module

### Serial Data Controlled Retained Accessory Power

Retained accessory power systems controlled by serial data are as follows:

## Radio

Radio retained accessory power activation / termination is the same as relay operation with one exception; the only door switch that will turn off the radio during retained accessory power is the driver door open switch.

## Vehicle Communication Interface Module (VCIM) (Onstar®) (If Equipped)

VCIM RAP activation/termination is the same as radio operation with 1 exception; if there is an active call when the ignition key is turned off the VCIM will remain in RAP mode, and keep the radio in RAP mode until the call is terminated.

# Safety and Security

## Immobilizer

### Schematic and Routing Diagrams

#### Immobilizer Schematics

##### Immobilizer

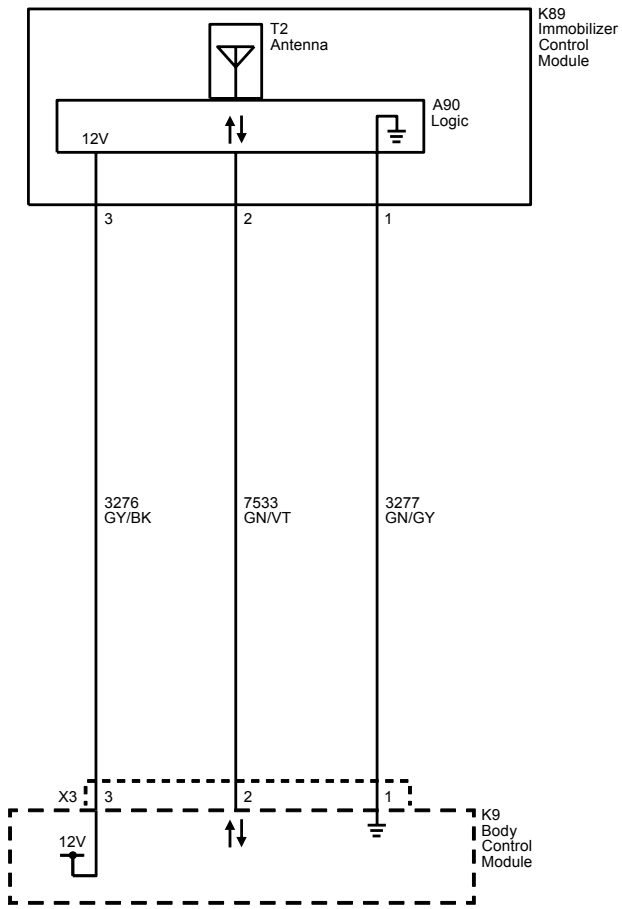

# Object Detection and Pedestrian Protection

## Schematic and Routing Diagrams

### Object Detection Schematics

#### Park Assist - Power, Ground, Serial Data and Control (UD7 or UD5)

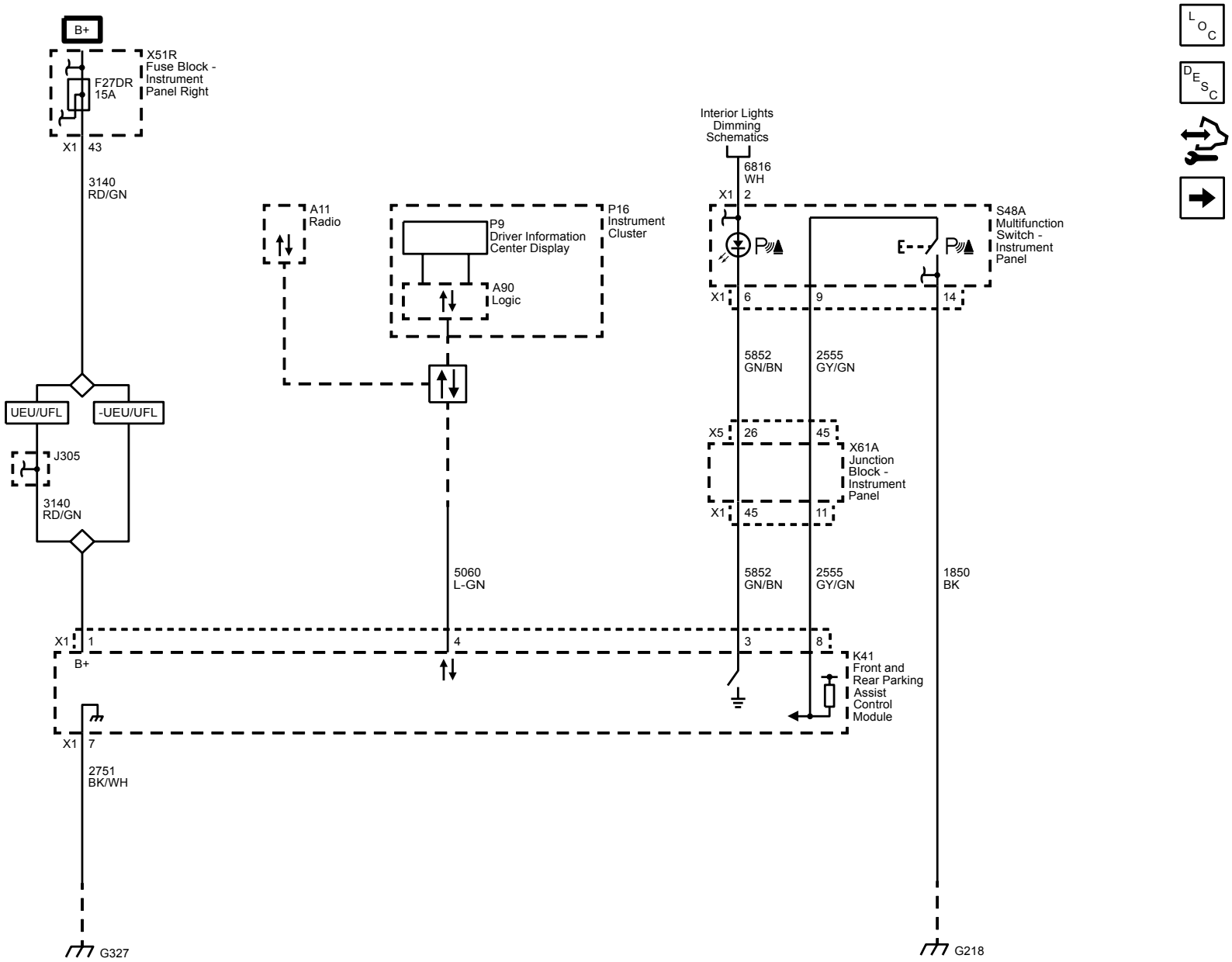

# Park Assist - Rear Sensors (UD7 or UD5)

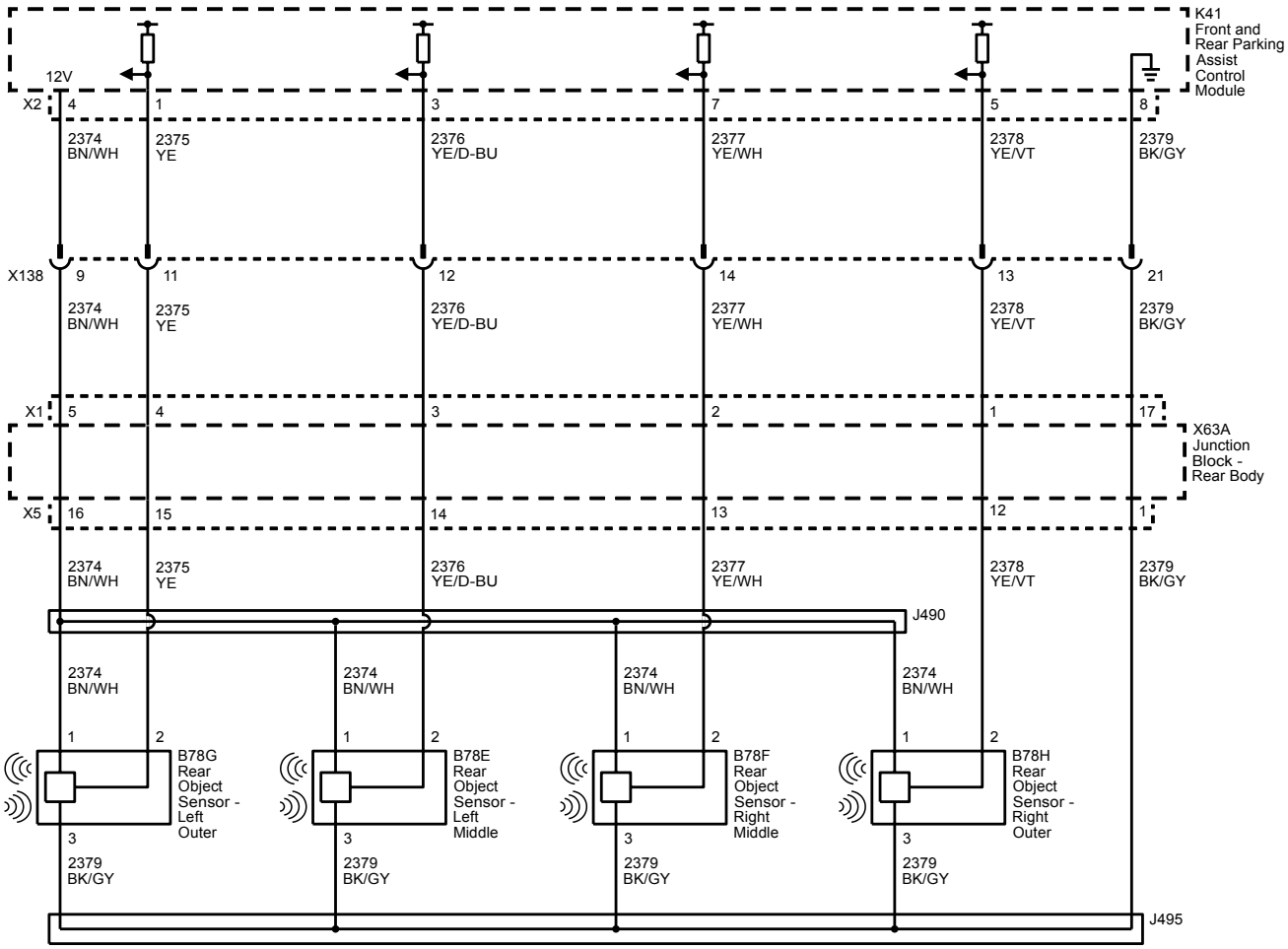

# Park Assist - Front Sensors (UD5)

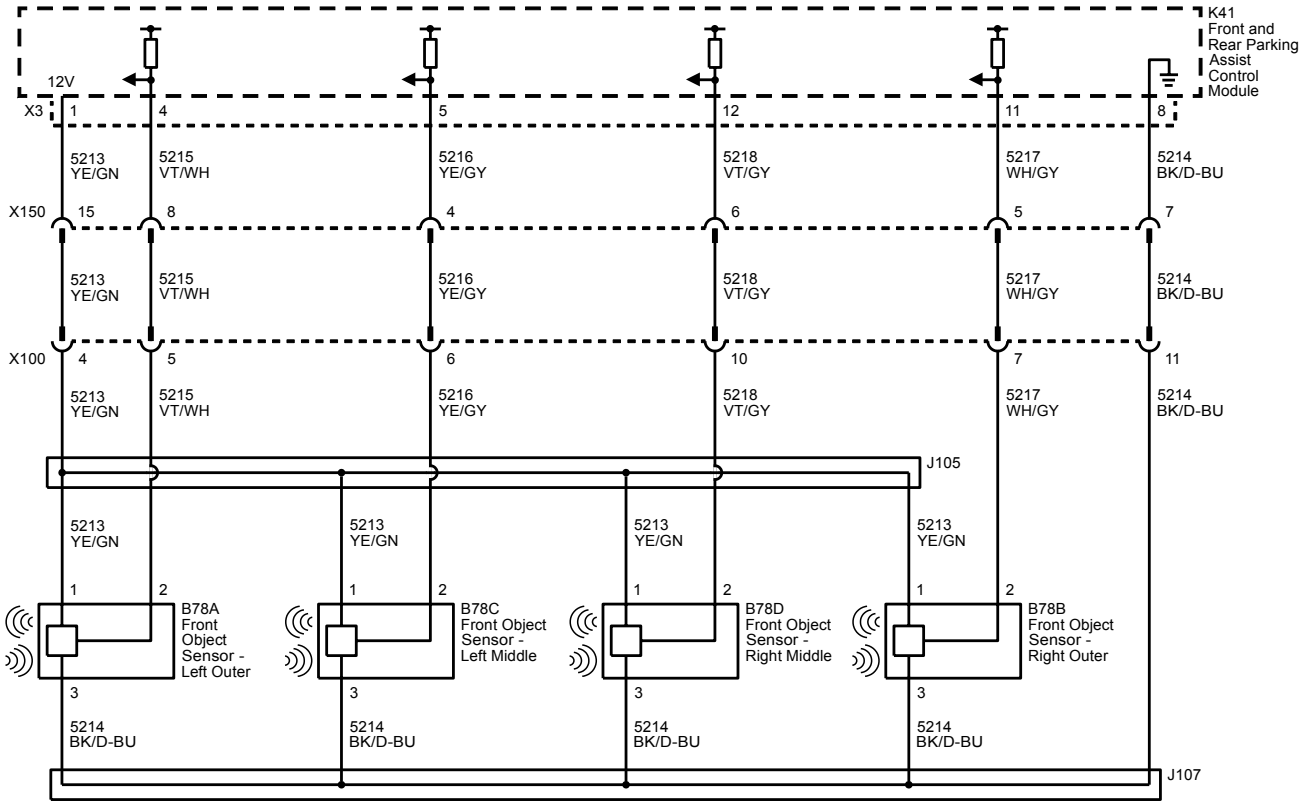

## Rearview Camera (UVC with IO3)

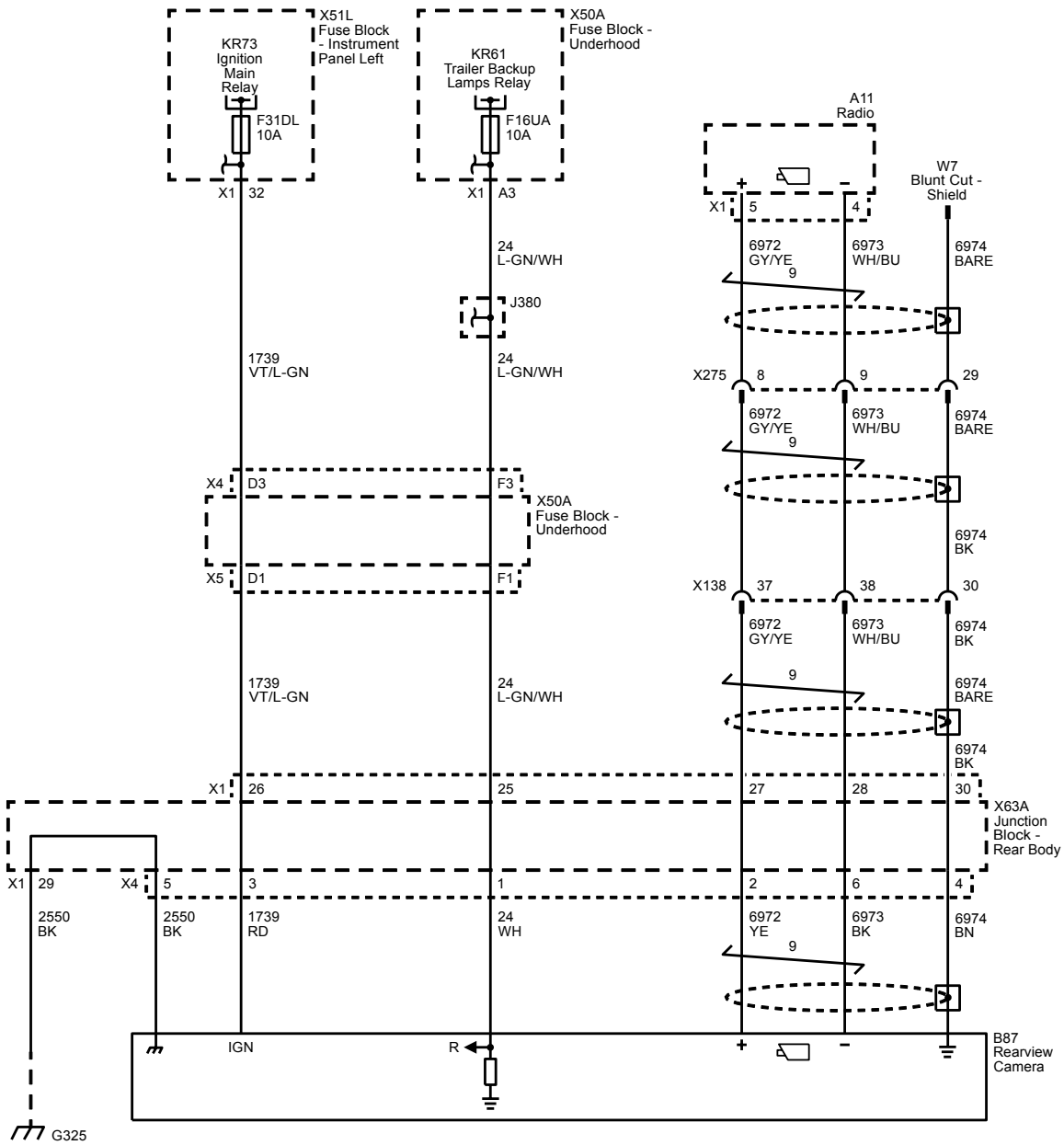

## Rearview Camera (UVC with IO4, IO5 or IO6)

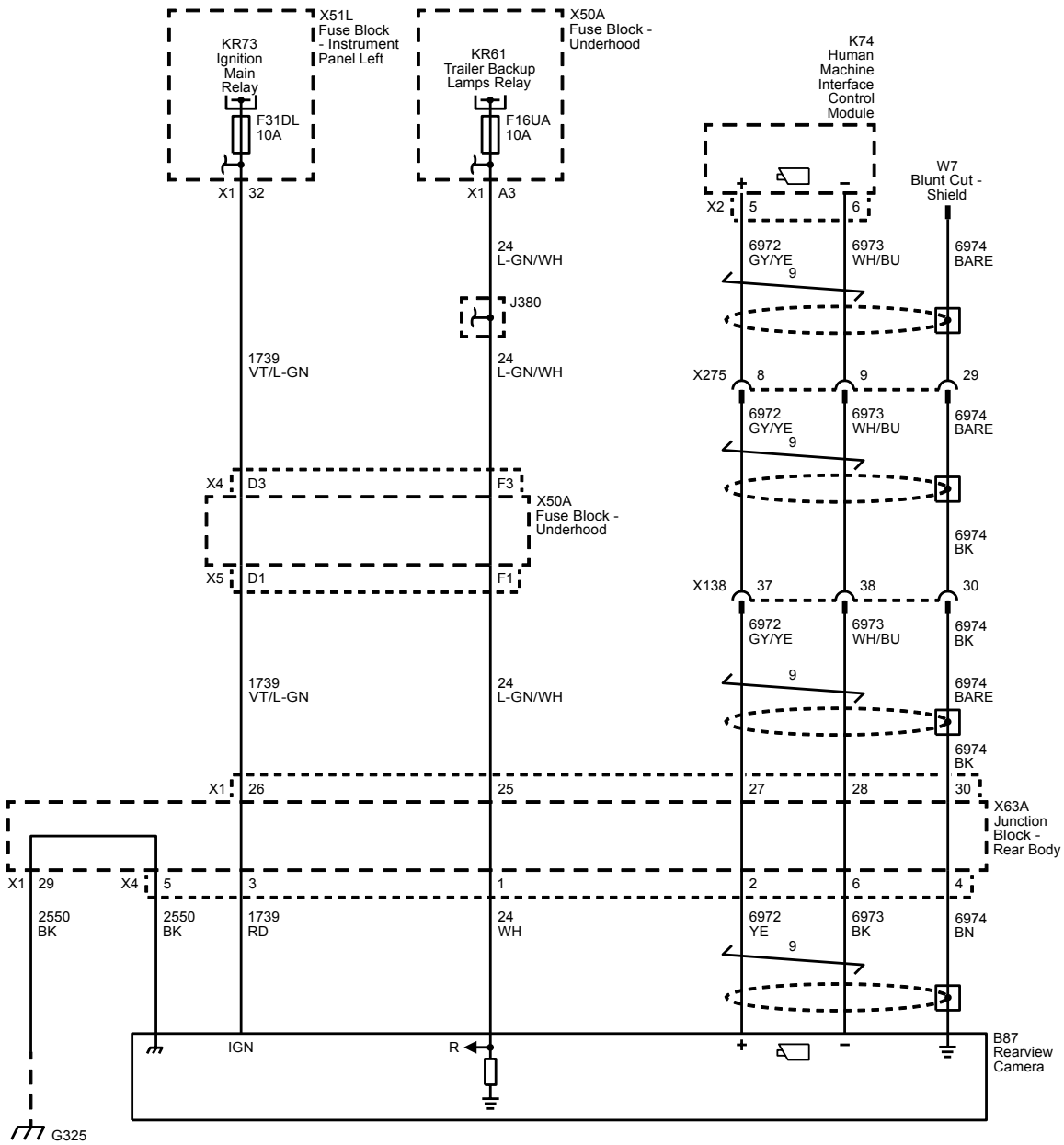

## Safety Alert Seat (UEU or UFL)

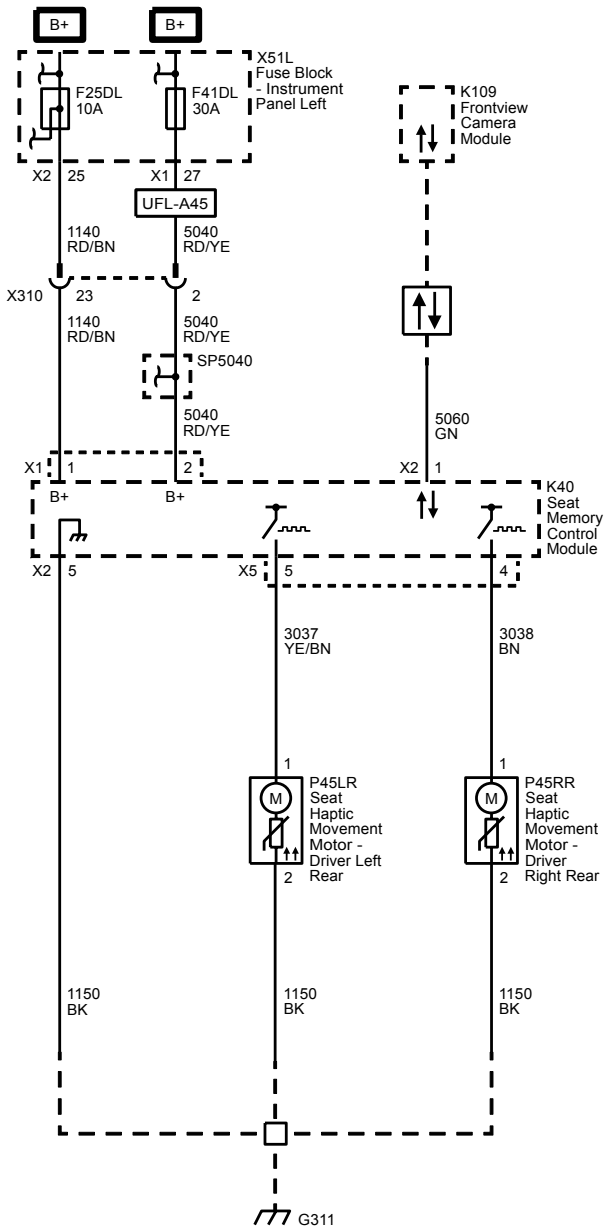

# Lane Departure Warning (UFL) and Forward Collision Alert (UEU)

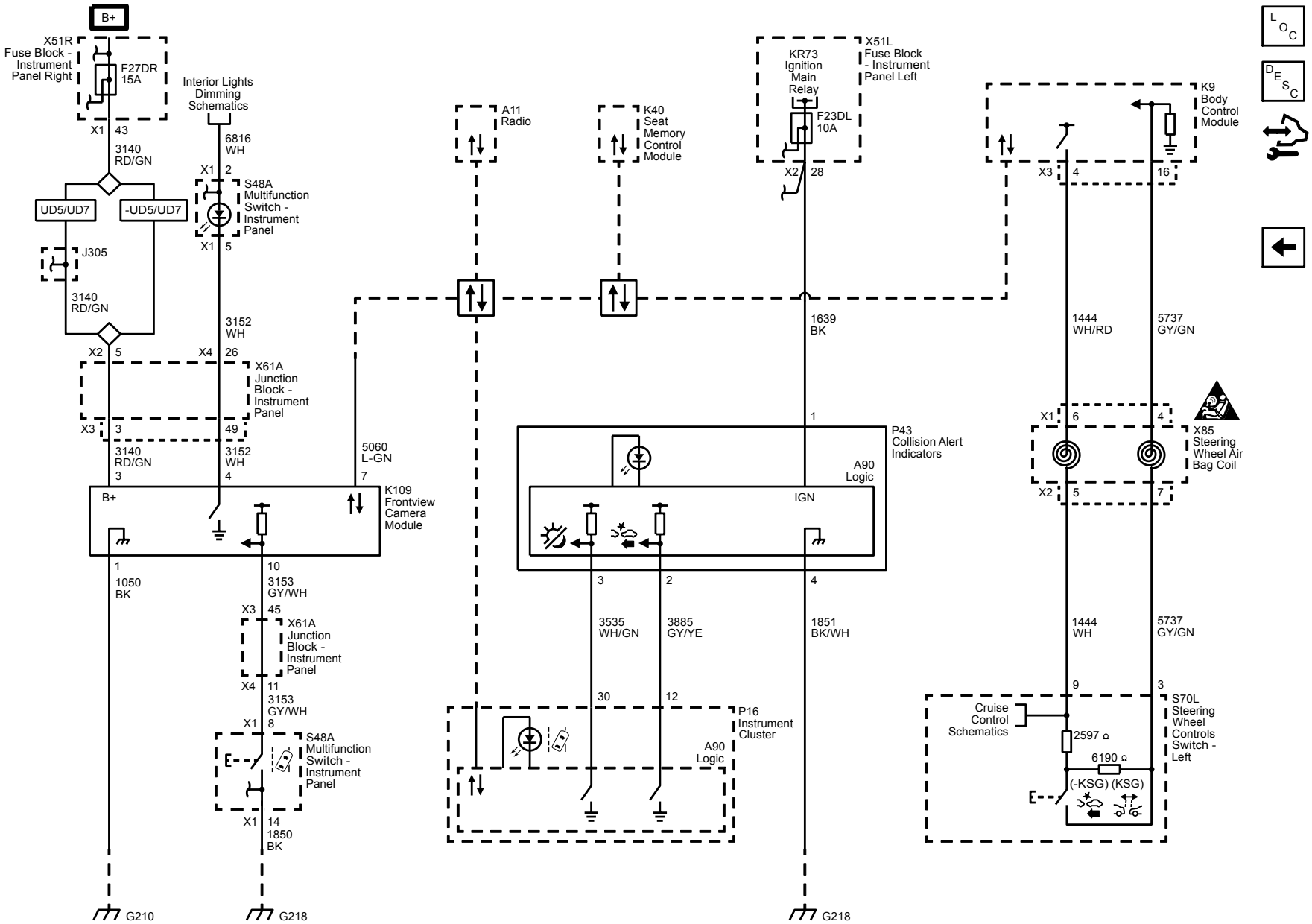

# Remote Functions

## Schematic and Routing Diagrams

### Remote Function Schematics

#### Keyless Entry

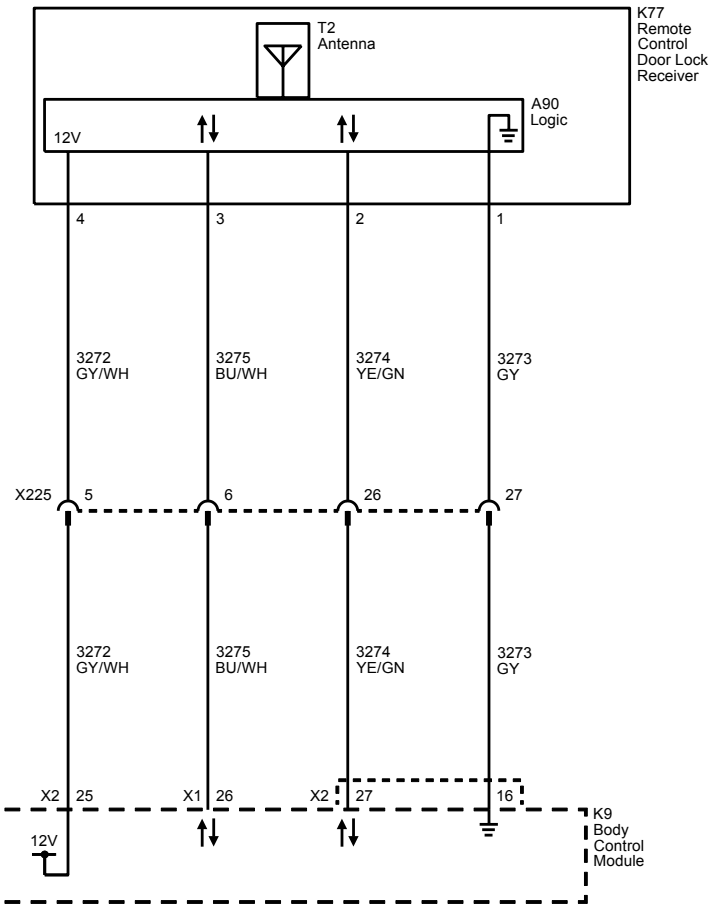

# Seat Belts

## Schematic and Routing Diagrams

### Seat Belt Schematics

#### Seat Belts

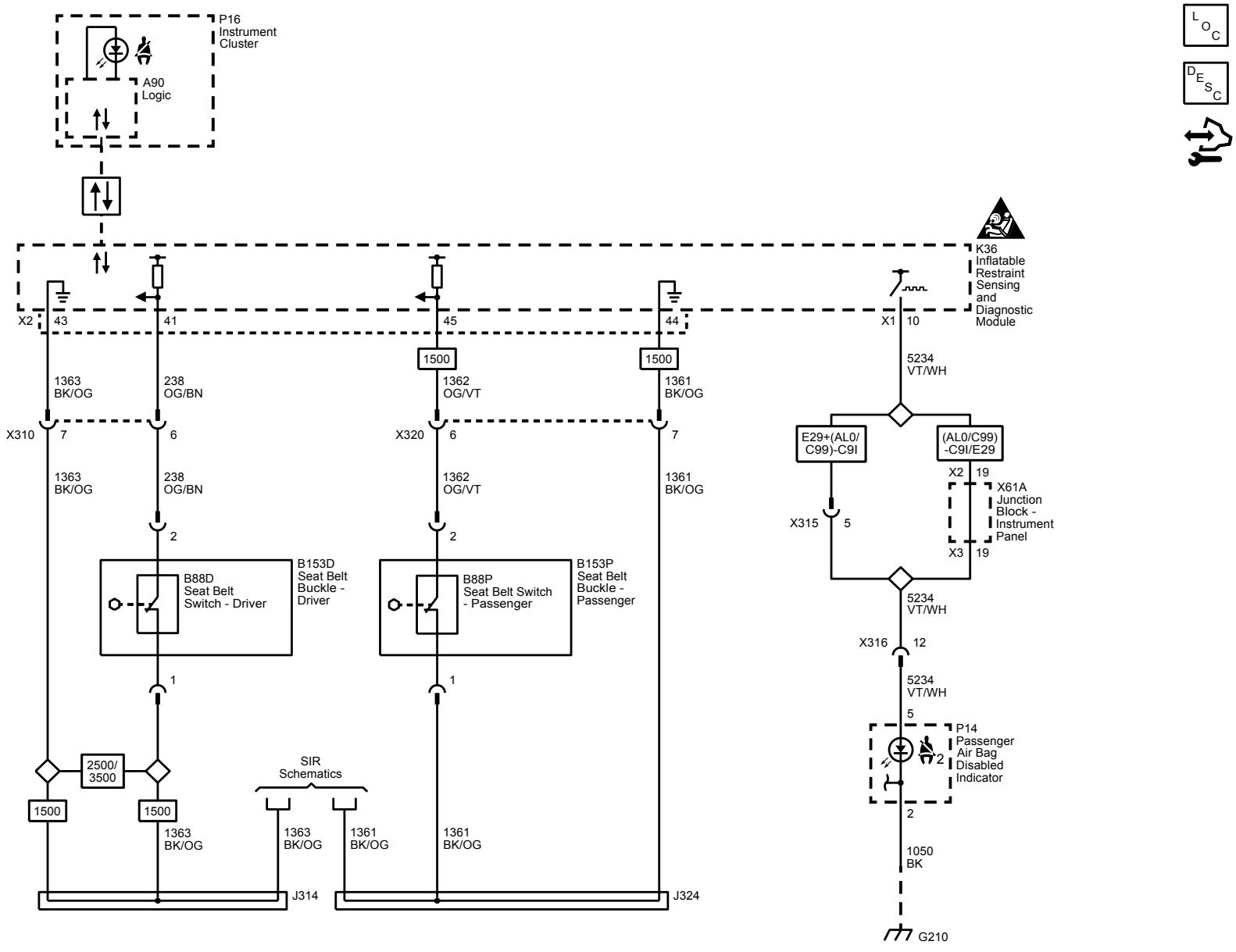

# Seats

## Power Seats

### Schematic and Routing Diagrams

#### Driver Seat Schematics

##### Power, Ground, Serial Data and Memory Switch (A45)

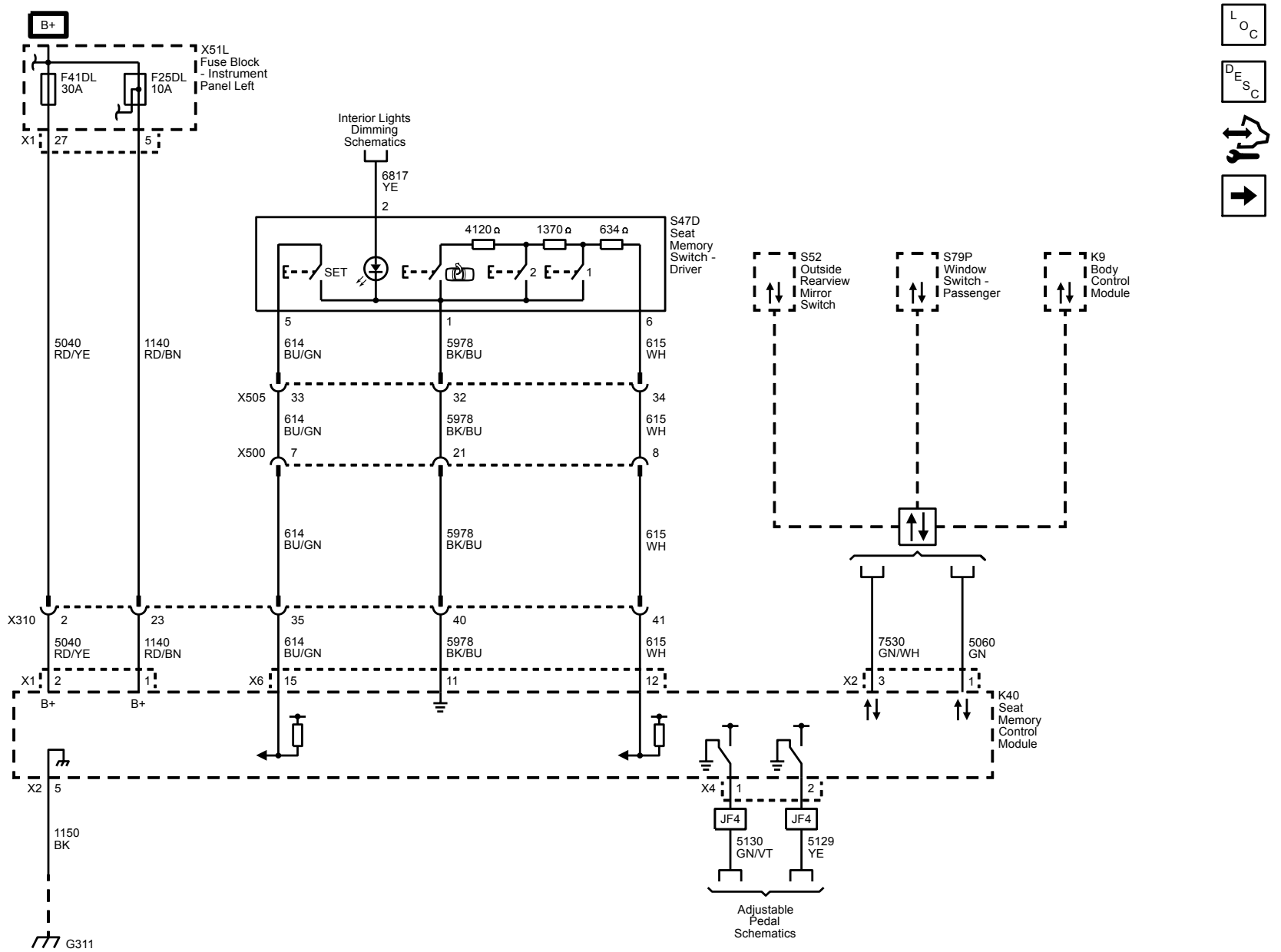

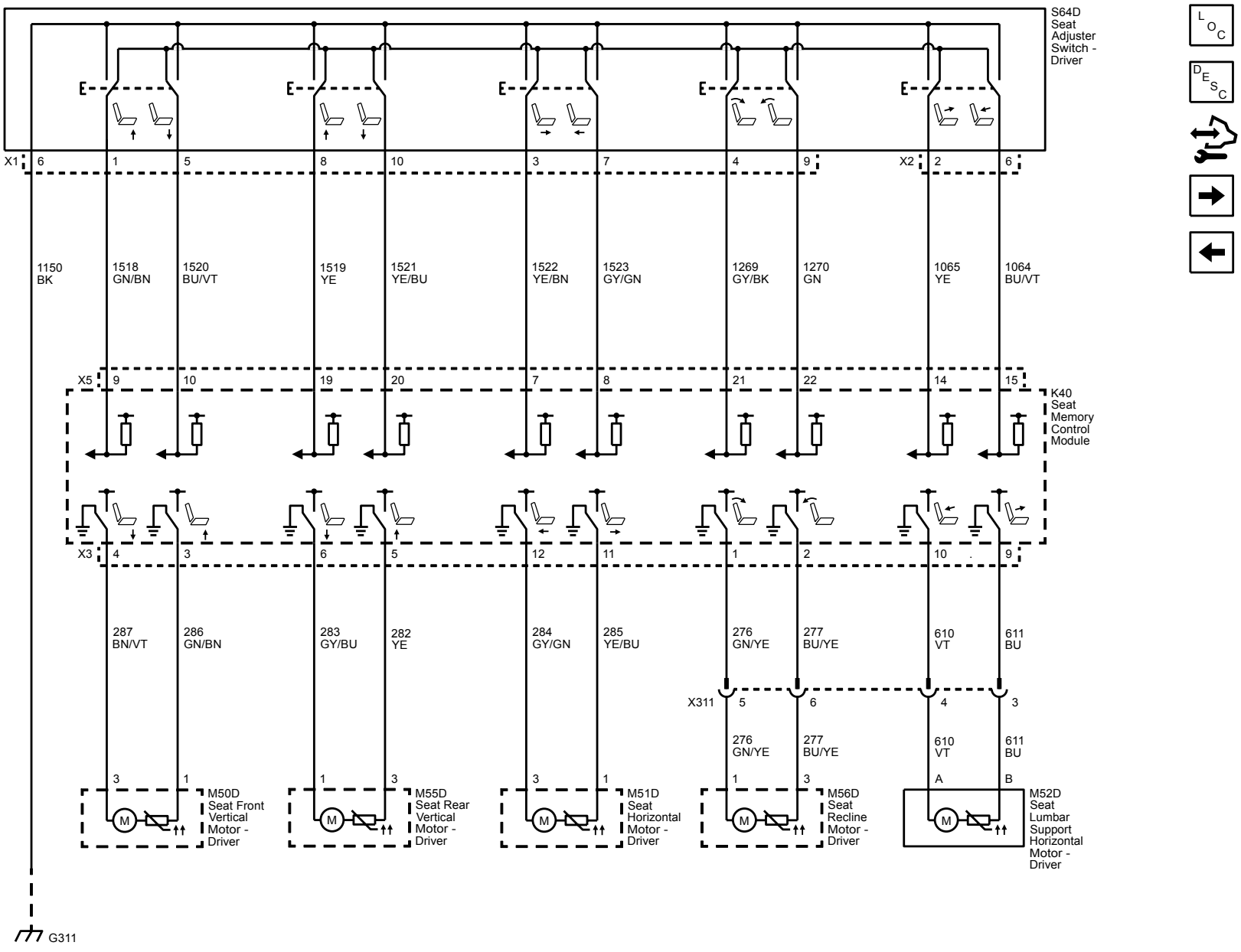
S64D
Seat
Adjuster
Switch -
Driver
X1
6
1
5
8
10
3
7
4
9
X2
2
6
1150
BK
1518
GN/BN
1520
BU/VT
1519
YE
1521
YE/BU
1522
YE/BN
1523
GY/GN
1269
GY/BK
1270
GN
1065
YE
1064
BU/VT
X5
9
10
19
20
7
8
21
22
14
15
K40
Seat
Memory
Control
Module
X3
4
3
6
5
12
11
1
2
10
9
287
BN/VT
286
GN/BN
283
GY/BU
282
YE
284
GY/GN
285
YE/BU
276
GN/YE
277
BU/YE
610
VT
611
BU
X311
5
6
4
3
M50D
Seat Front
Vertical
Motor -
Driver
M55D
Seat Rear
Vertical
Motor -
Driver
M51D
Seat
Horizontal
Motor -
Driver
M56D
Seat
Recline
Motor -
Driver
M52D
Seat
Lumbar
Support
Horizontal
Motor -
Driver
G311

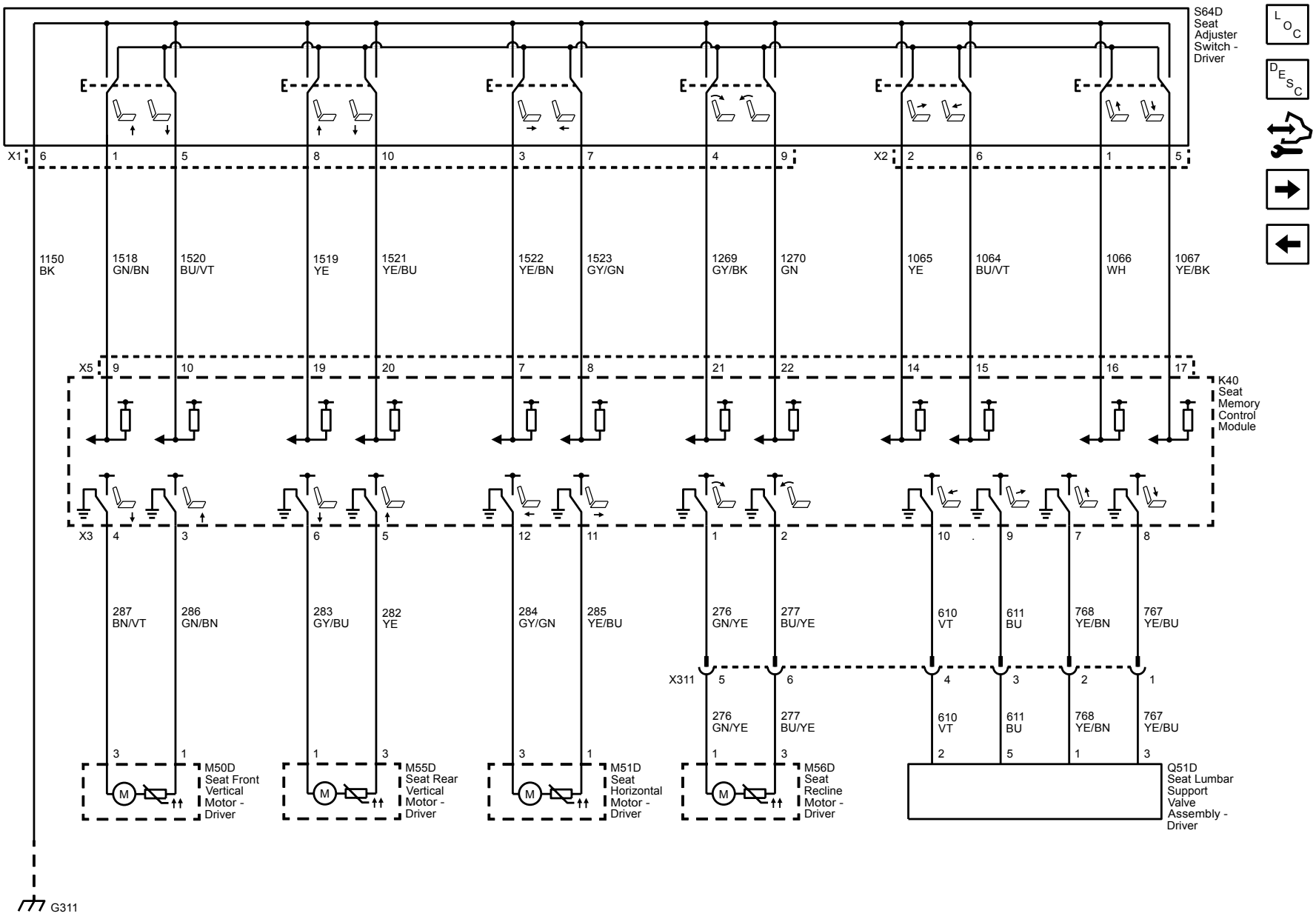
S64D
Seat
Adjuster
Switch -
Driver
X1
6
1
5
8
10
3
7
4
9
X2
2
6
1
5
1150
BK
1518
GN/BN
1520
BU/VT
1519
YE
1521
YE/BU
1522
YE/BN
1523
GY/GN
1269
GY/BK
1270
GN
1065
YE
1064
BU/VT
1066
WH
1067
YE/BK
X5
9
10
19
20
7
8
21
22
14
15
16
17
K40
Seat
Memory
Control
Module
X3
4
3
6
5
12
11
1
2
10
9
7
8
287
BN/VT
286
GN/BN
283
GY/BU
282
YE
284
GY/GN
285
YE/BU
276
GN/YE
277
BU/YE
610
VT
611
BU
768
YE/BN
767
YE/BU
X311
5
6
4
3
2
1
276
GN/YE
277
BU/YE
610
VT
611
BU
768
YE/BN
767
YE/BU
3
1
M50D
Seat Front
Vertical
Motor -
Driver
1
3
M55D
Seat Rear
Vertical
Motor -
Driver
3
1
M51D
Seat
Horizontal
Motor -
Driver
1
3
M56D
Seat
Recline
Motor -
Driver
2
5
1
3
Q51D
Seat Lumbar
Support
Valve
Assembly -
Driver
M
G311

## Position Sensors (A45)

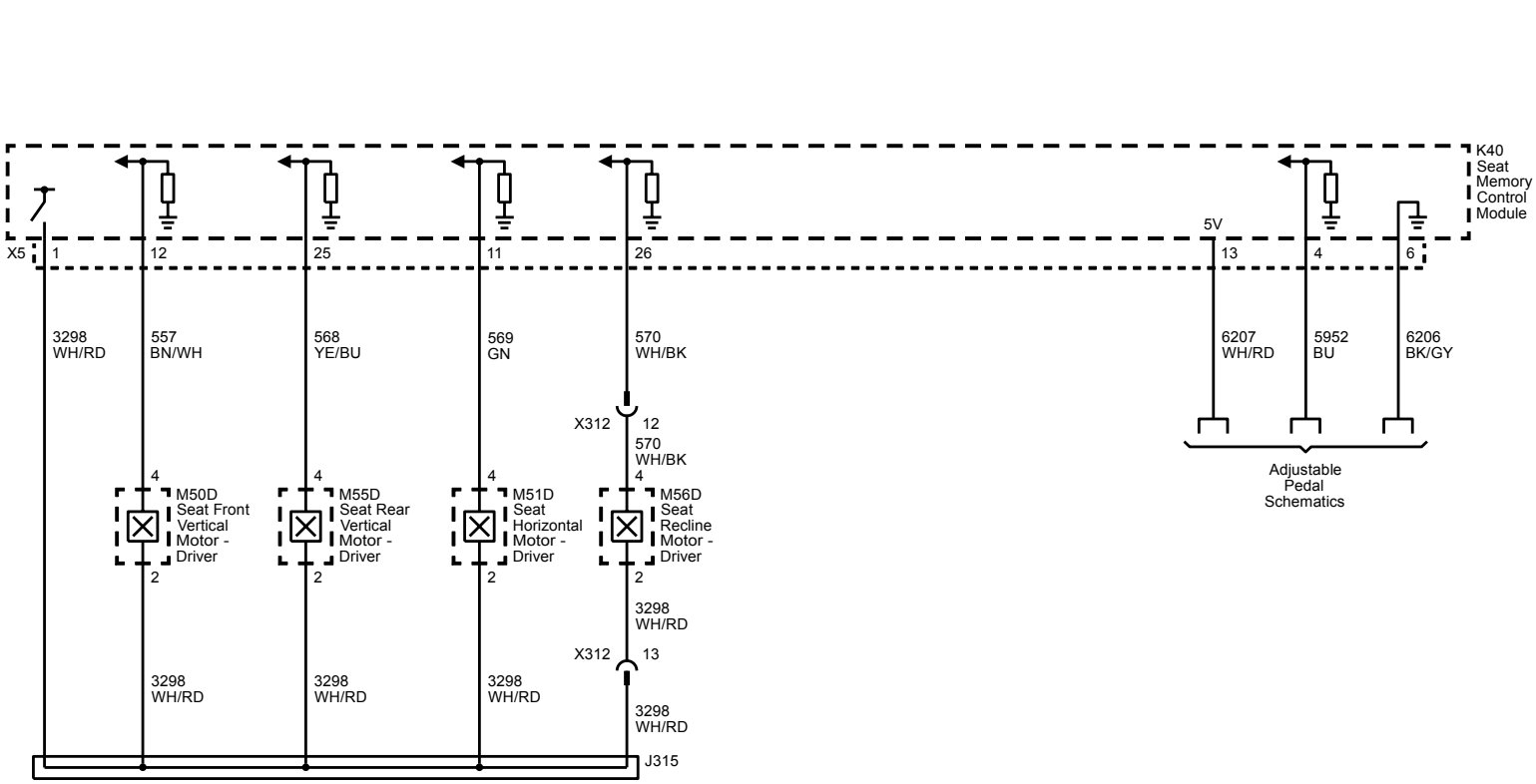

## Power Seat (without A45)

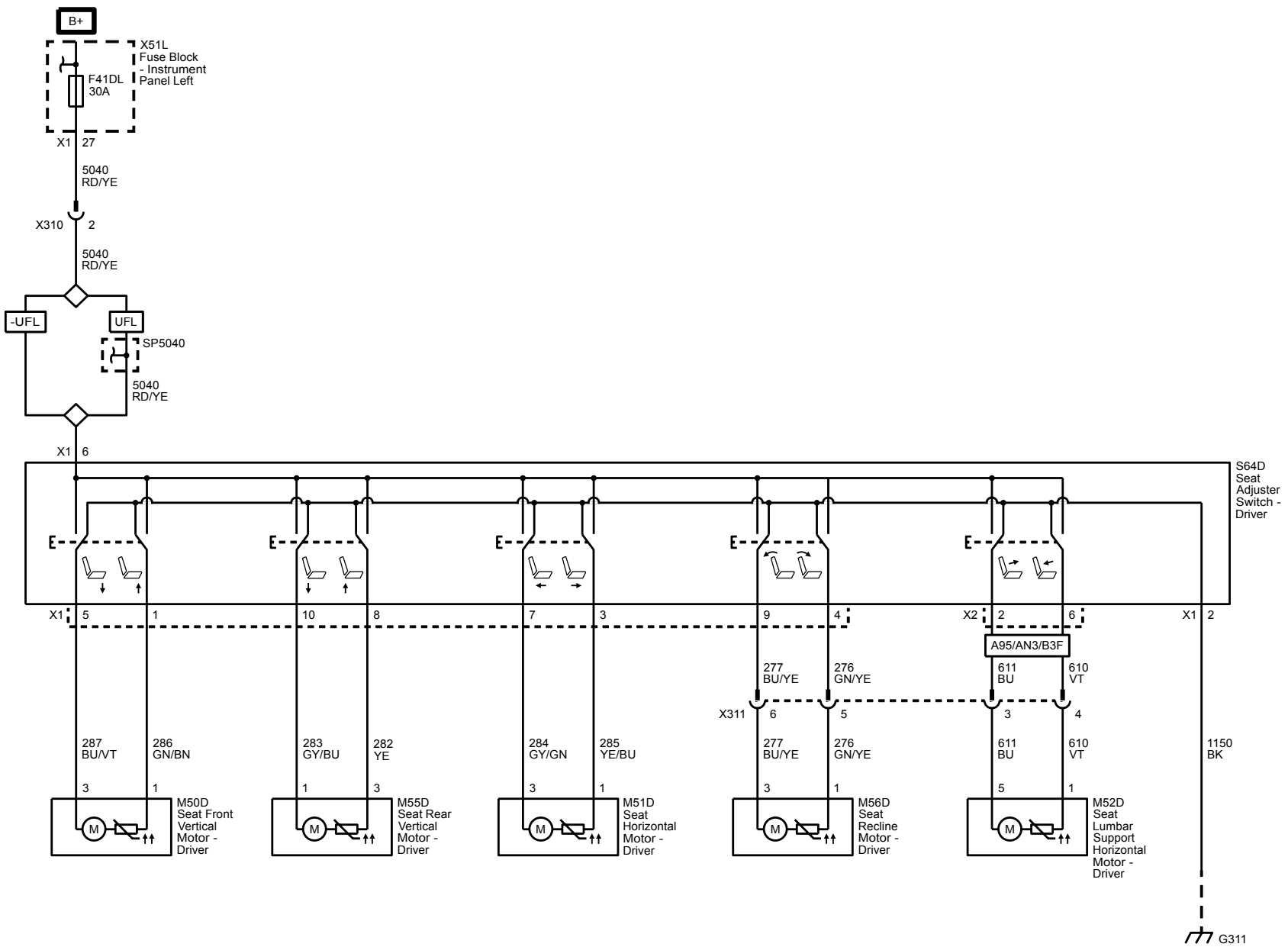

## Passenger Seat Schematics

### Power Seat (without GAJ or Y91)

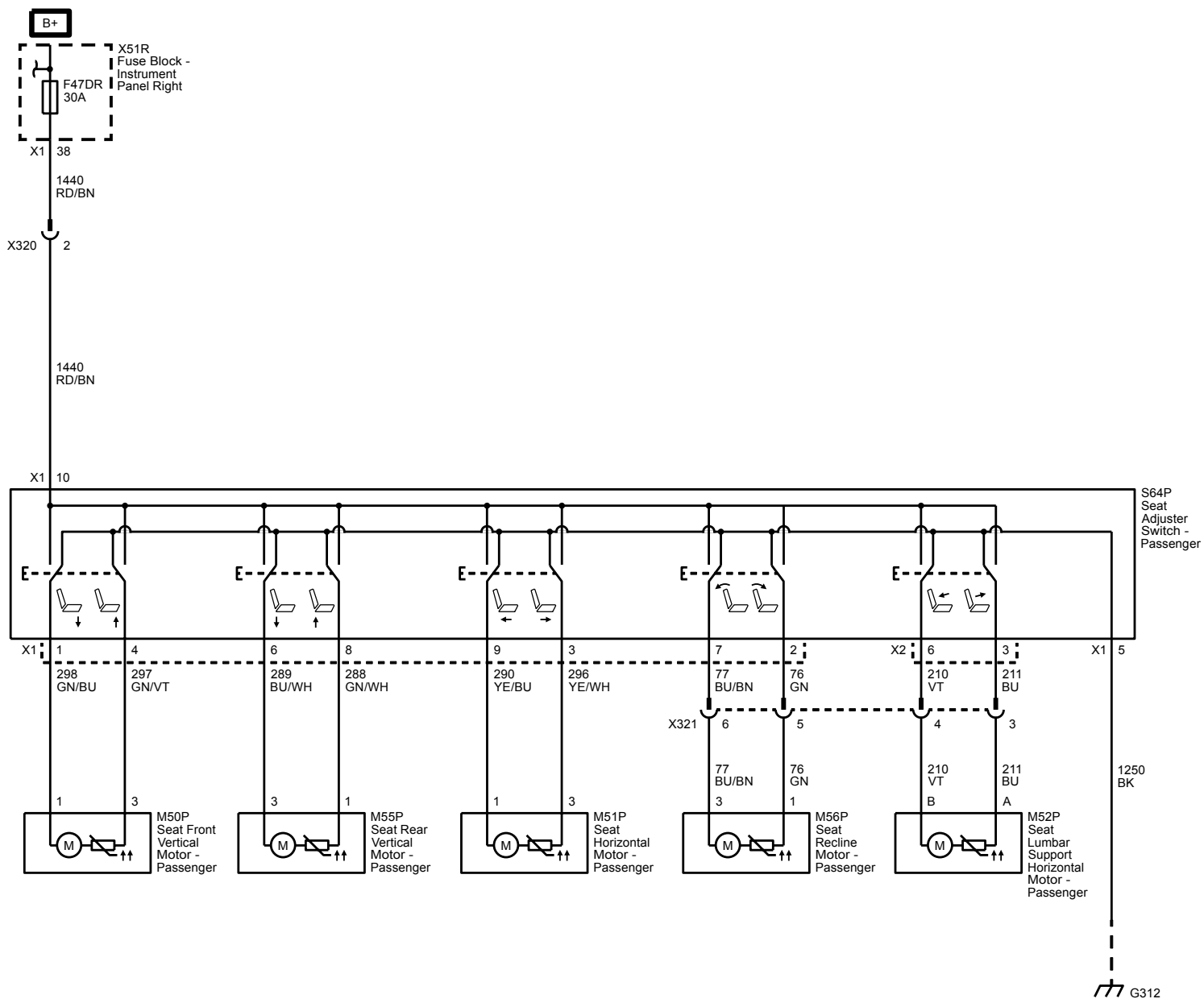

# Power Seat (GAJ or Y91)

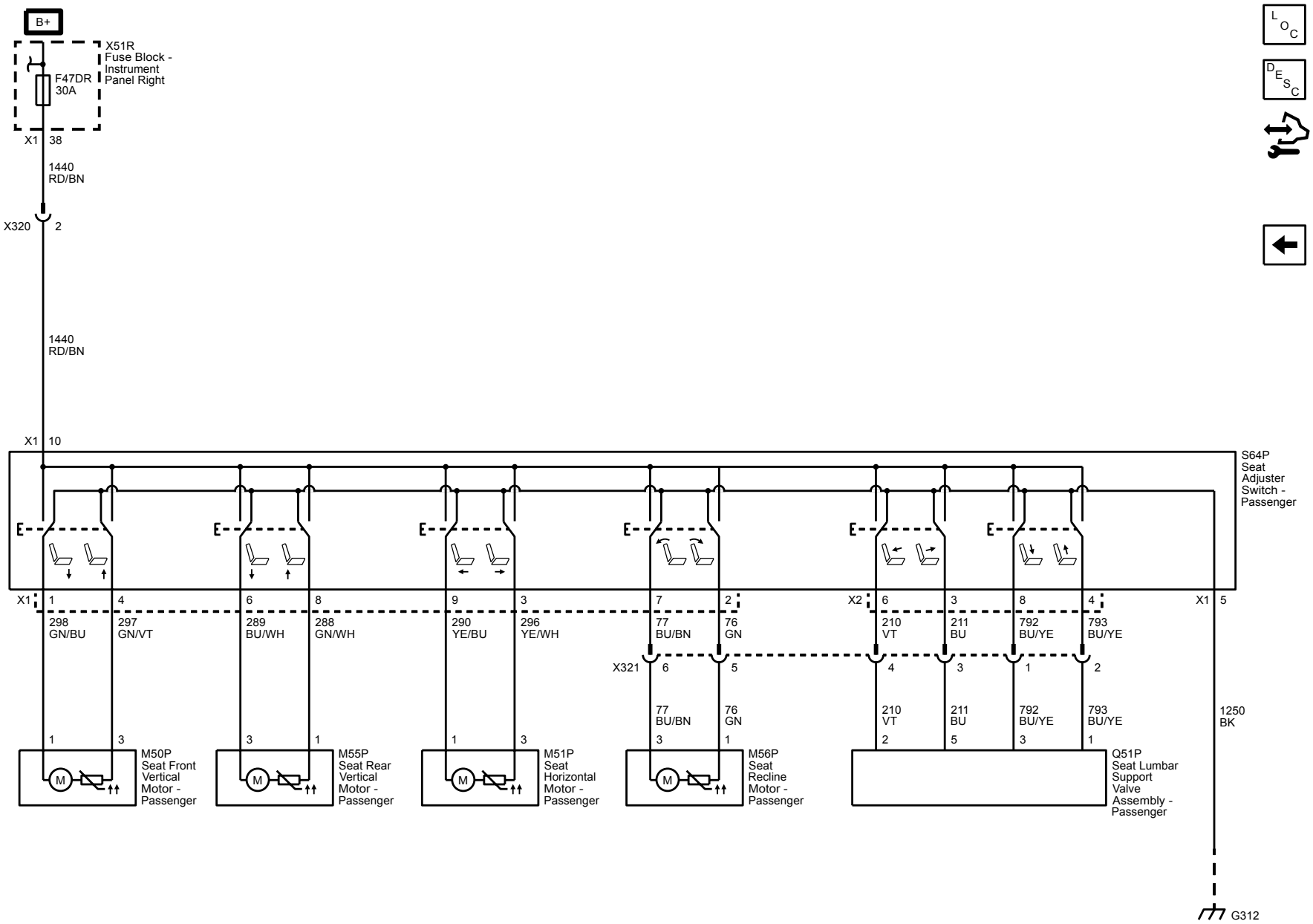

# Seat Heating and Cooling

## Schematic and Routing Diagrams

### Heated/Cooled Seat Schematics

#### Power, Ground, Serial Data and Switches (KA1)

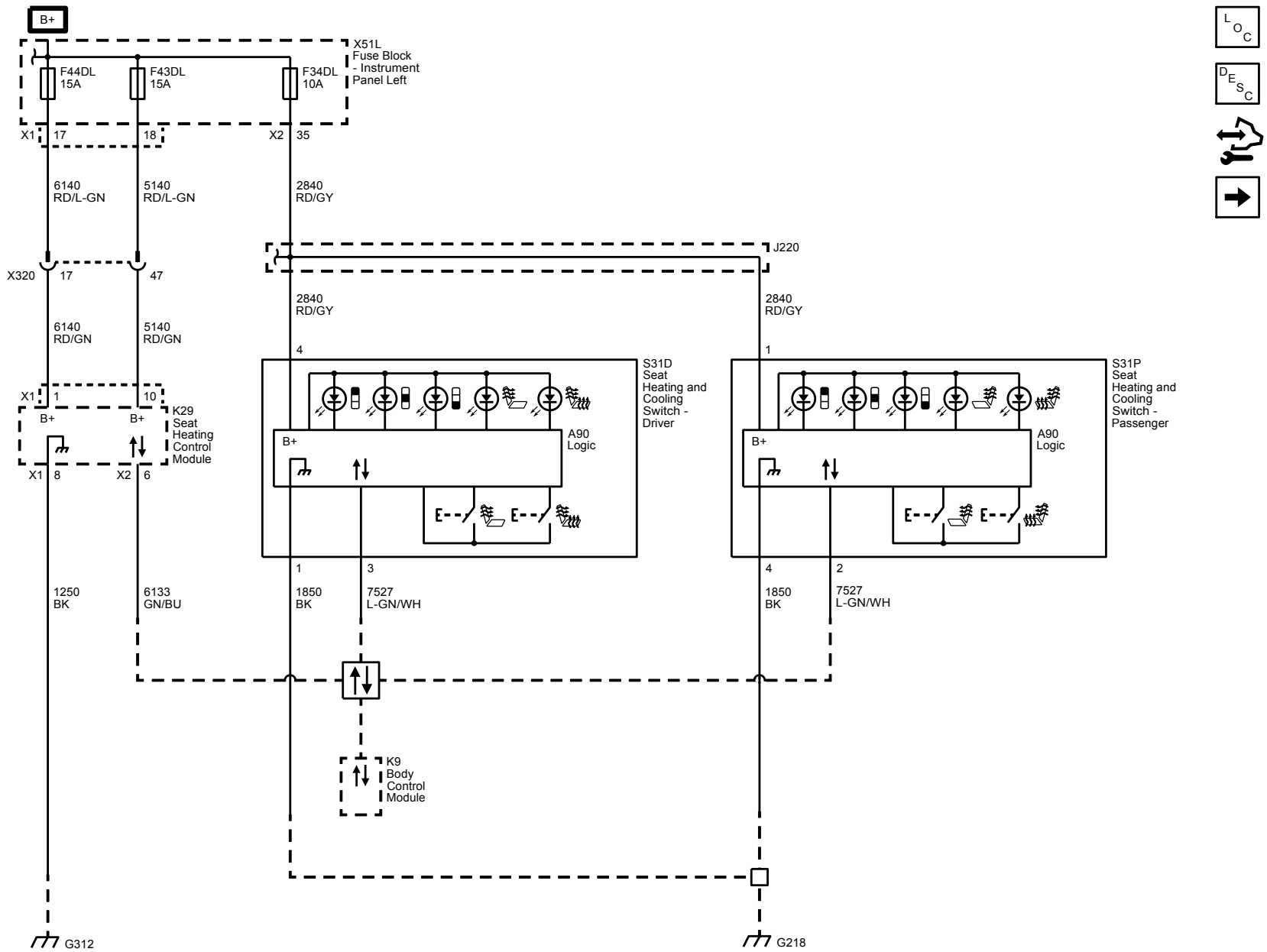

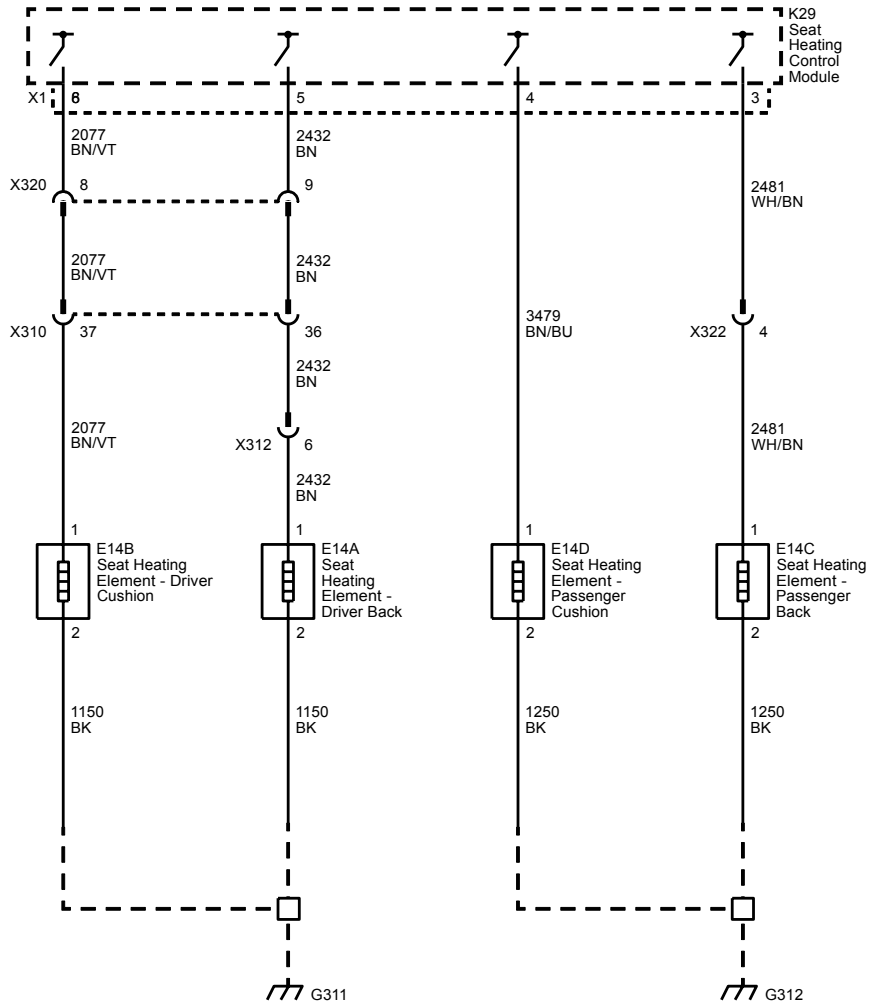
K29
Seat
Heating
Control
Module
X1
6
5
4
3
2077
BN/VT
2432
BN
X320
8
9
2481
WH/BN
2077
BN/VT
2432
BN
X310
37
36
3479
BN/BU
X322
4
2432
BN
2077
BN/VT
X312
6
2481
WH/BN
2432
BN
1
1
1
1
E14B
Seat Heating
Element - Driver
Cushion
E14A
Seat
Heating
Element -
Driver Back
E14D
Seat Heating
Element -
Passenger
Cushion
E14C
Seat Heating
Element -
Passenger
Back
2
2
2
2
1150
BK
1150
BK
1250
BK
1250
BK
G311
G312

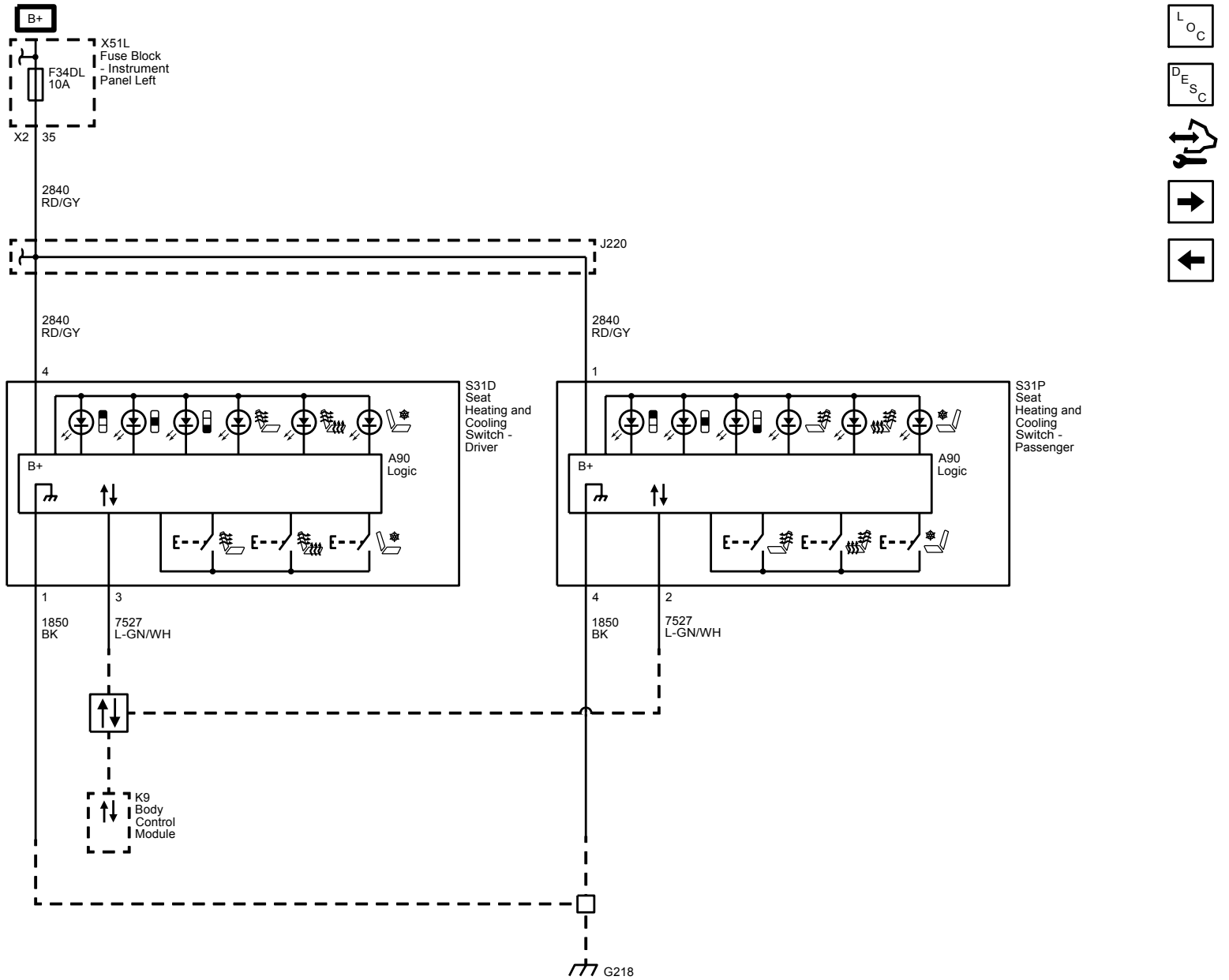
B+
X51L
Fuse Block
- Instrument
Panel Left
F34DL
10A
X2
35
2840
RD/GY
J220
2840
RD/GY
2840
RD/GY
4
1
S31D
Seat
Heating and
Cooling
Switch -
Driver
S31P
Seat
Heating and
Cooling
Switch -
Passenger
B+
A90
Logic
B+
A90
Logic
1
3
4
2
1850
BK
7527
L-GN/WH
1850
BK
7527
L-GN/WH
K9
Body
Control
Module
G218

# Driver Seat (KB6)

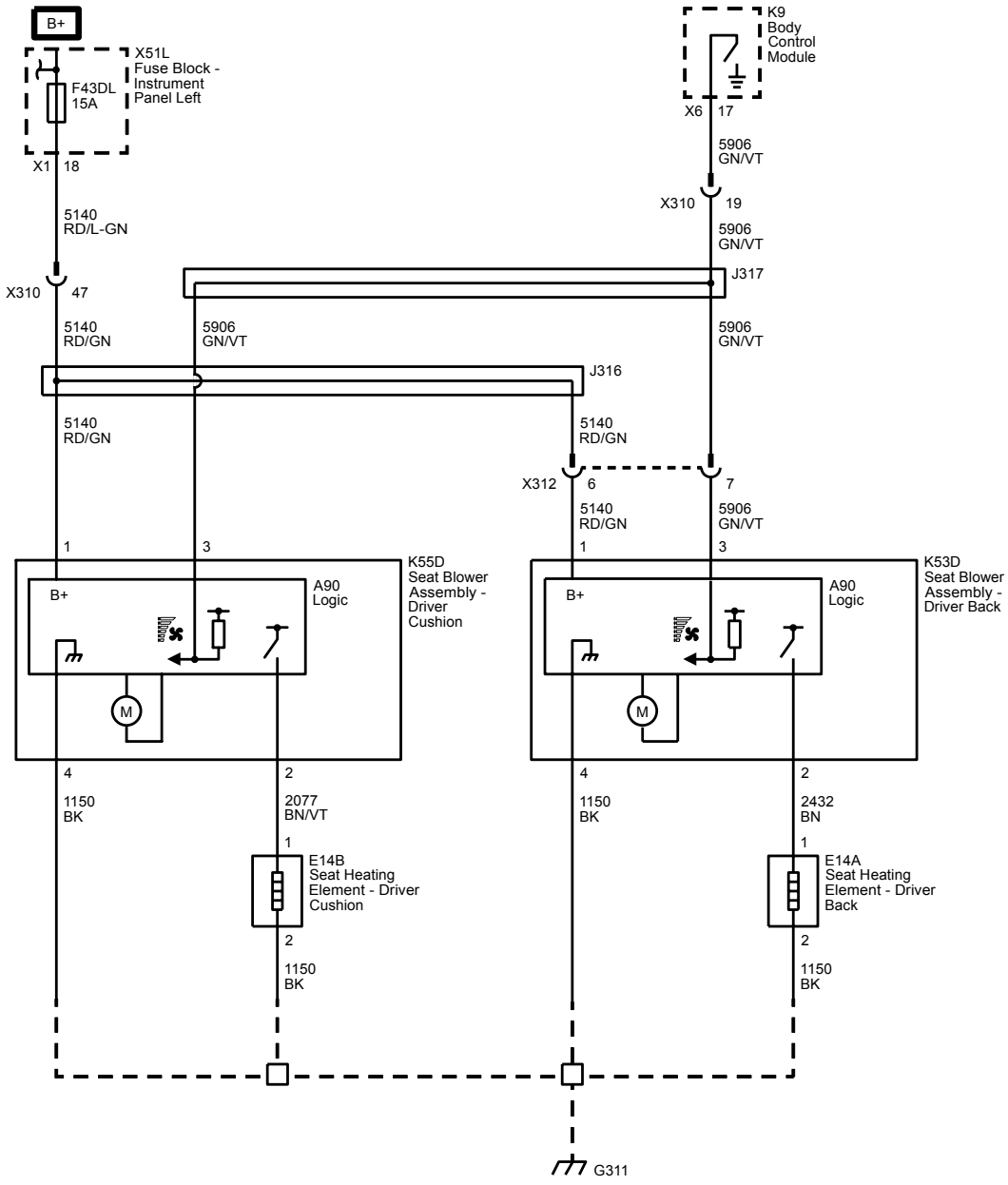

# Passenger Seat (KB6)

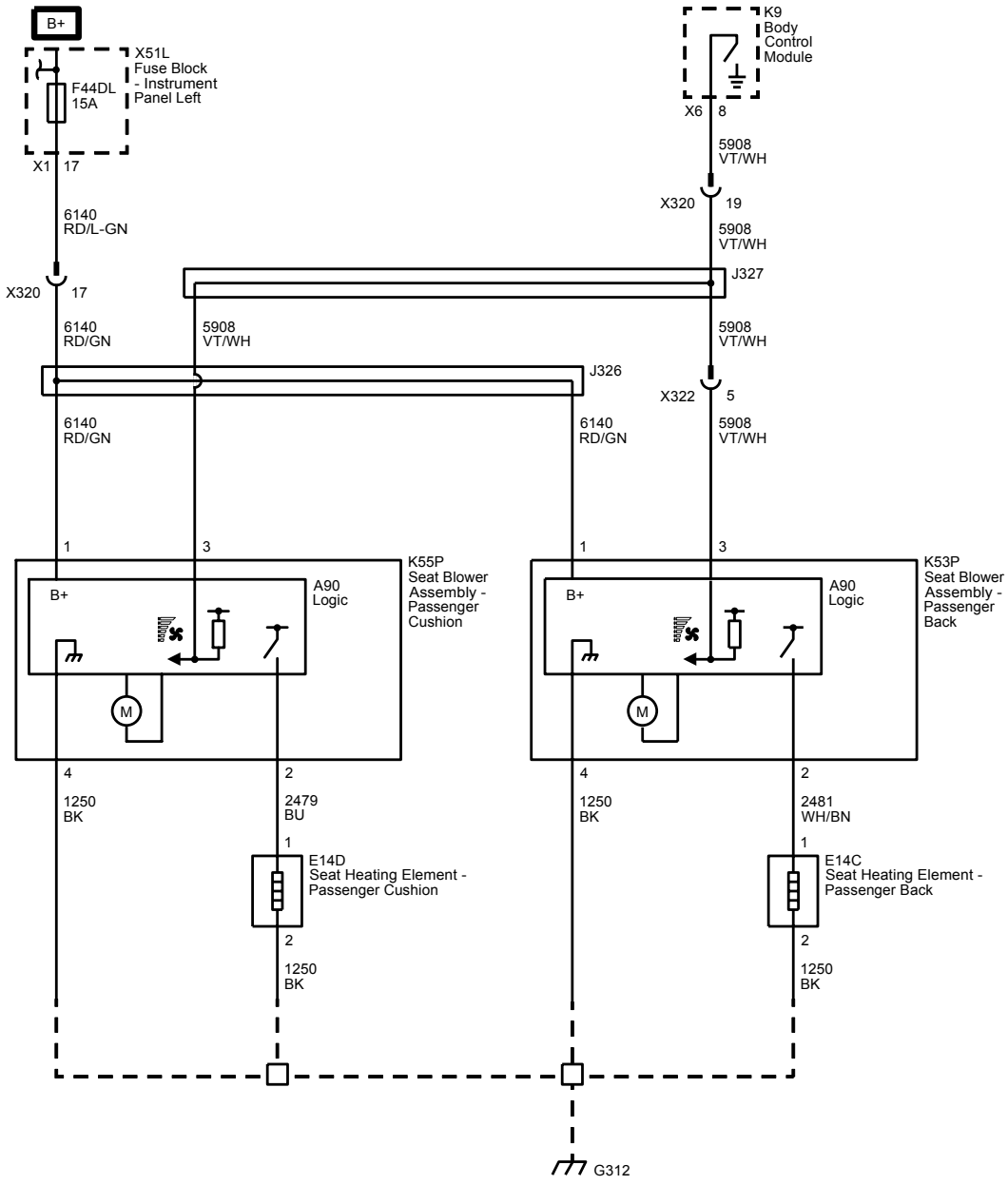

# Steering

## Power Steering

### Schematic and Routing Diagrams

# Transmission

## Power Take-Off

### Schematic and Routing Diagrams

#### Power Take-Off (PTO) Schematics

##### Power, Ground, Serial Data and Enable

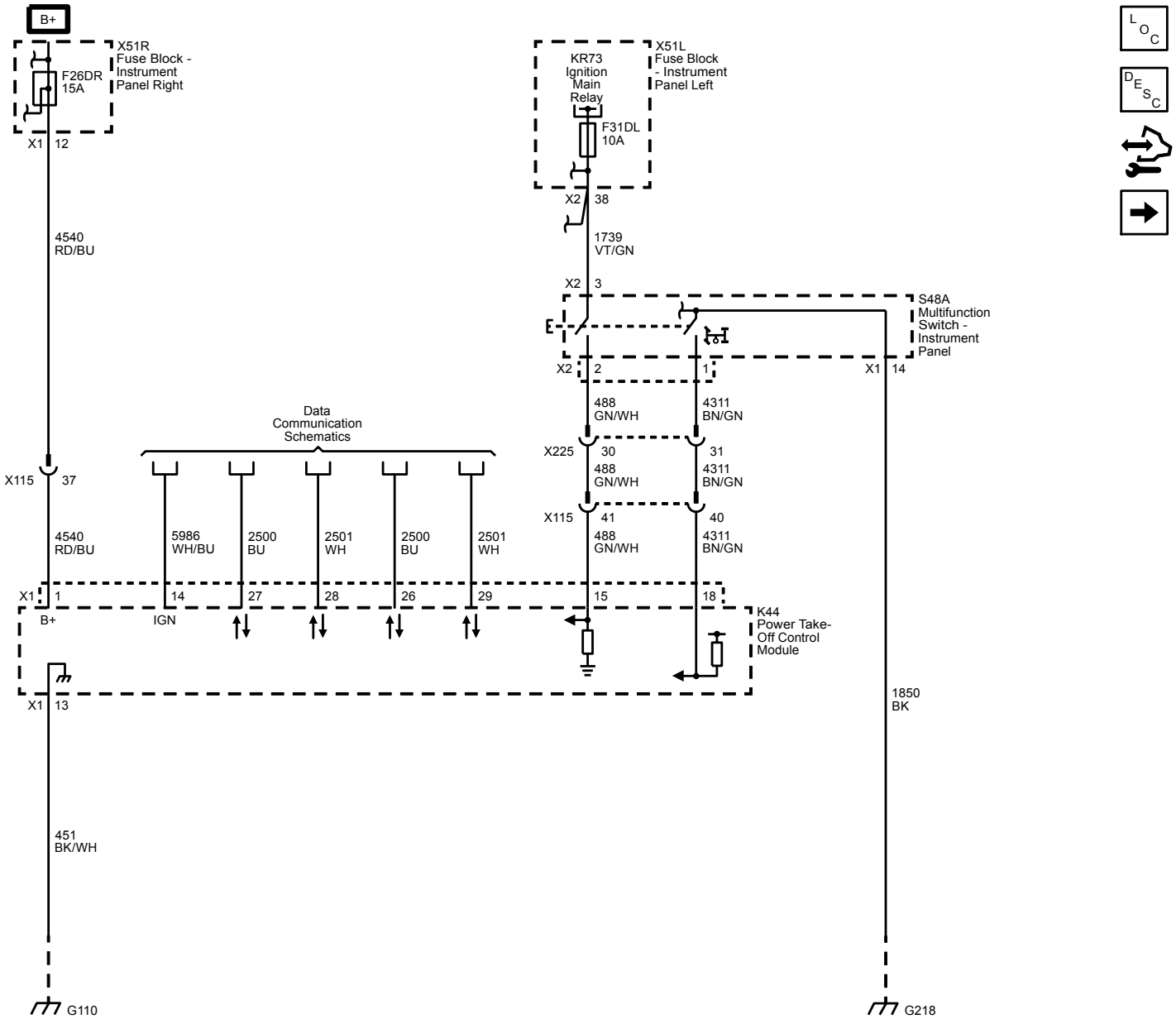

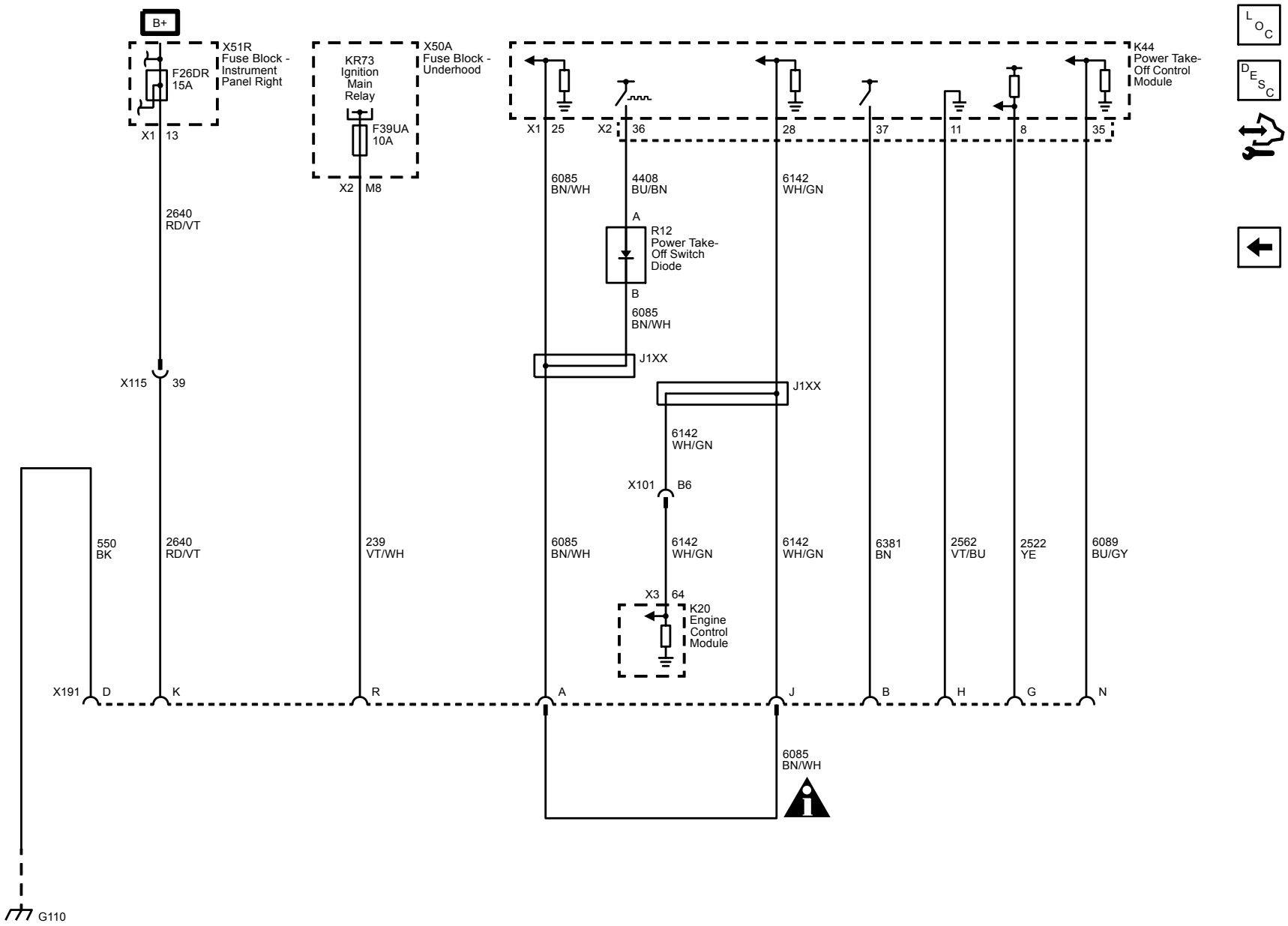
B+
X51R
Fuse Block -
Instrument
Panel Right
F26DR
15A
X1 13
2640
RD/VT
X115 39
KR73
Ignition
Main
Relay
F39UA
10A
X50A
Fuse Block -
Underhood
X2 M8
K44
Power Take-
Off Control
Module
X1 25 X2 36 28 37 11 8 35
6085
BN/WH
4408
BU/BN
6142
WH/GN
A
R12
Power Take-
Off Switch
Diode
B
6085
BN/WH
J1XX
J1XX
6142
WH/GN
X101 B6
X3 64
K20
Engine
Control
Module
550
BK
2640
RD/VT
239
VT/WH
6085
BN/WH
6142
WH/GN
6142
WH/GN
6381
BN
2562
VT/BU
2522
YE
6089
BU/GY
X191 D K R A J B H G N
6085
BN/WH
G110

# Shift Lock Control

## Schematic and Routing Diagrams

### Shift Lock Control Schematics

#### Shift Lock Control (M5U, MW7, MYC or MYD)

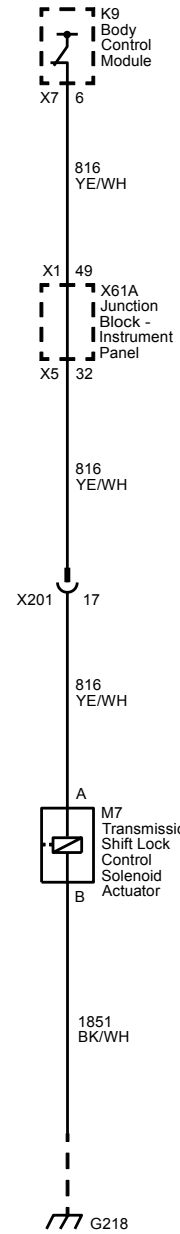


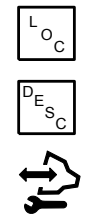

# Description and Operation

## Automatic Transmission Shift Lock Control Description and Operation

The Automatic Transmission Shift Lock Control System is a safety device that prevents an inadvertent shift out of PARK when the engine is running. The driver must press the brake pedal before moving the shift lever out of the PARK position. The system consists of the following components:

- The Automatic Transmission Shift Lock Solenoid (serviced as the Automatic Transmission Shift Lock Actuator)
- The Body Control Module (BCM)
- The Engine Control Module (ECM)

The BCM controls the voltage to the shift lock control solenoid though the shift lock control solenoid controlled voltage circuit. The following conditions must be met before the BCM will supply voltage to the shift lock control solenoid:

- The ignition is in the ON position.
- The ECM sends an input via GMLAN serial data to the BCM when the Transmission Control Module (TCM) indicates the transmission is in the PARK position.
- The BCM receives a brake applied input from the stop lamp switch.

Since the shift lock control solenoid is permanently grounded, the BCM supplies voltage to the automatic transmission shift lock control solenoid, releasing the mechanical lock on the shift lever as the solenoid energizes. The energized solenoid allows the driver to move the shift lever out of the PARK position. When the brake pedal is not applied, the BCM turns the control voltage output of the shift lock control solenoid OFF, de-energizing the shift lock control solenoid. When the transmission is in the PARK position, the de-energized shift lock control solenoid will prevent shifting as the lever is mechanically locked in the PARK position.

During remote start operation, the BCM will energize the shift lock control circuit, locking the shift lever in the PARK position.